DRIVE CENTRE
Industrial Automation Systems Integrators
57 Galaxy Blvd., Units 1 & 2, Toronto, ON M9W 5P1
TEL: (416) 231-6767
www.drivecentre.ca

# NT Motor 230 V

## Compact NEMA or Metric Flange AC Servo Motors

The NT motor is a compact, high performance brushless AC Servo motor designed to maximize torque and minimize size. The NT motor uses powerful magnets and is manufactured with a segmented core to maximize stator efficiency.

These motors are available with direct motor-to-drive connector terminations for Control Techniques' brand Unidrive M, Digitax ST and Epsilon EP servo drives – cable lengths up to 20 ft are available.

### Key Features

- Torque range: 7.5 to 56 lb-in (0.85 to 6.3 Nm)
- Very low inertia for high acceleration and cycle rates
- English (NEMA 23 or 34) or Metric (IEC- 72-1) flanges
- Available with or without holding brakes
- Direct connect available – no additional cables required!
- Flying-lead cabling option (ex: NTE-320-LONS-0005) with improved ingress protection; flying leads are available with or without MS connectors
- IP65 conformance (IP67S and IP68S optional)
- Standard 2048 encoder
- Installed shaft seal are standard with all motors
- Optional white epoxy food-grade finish

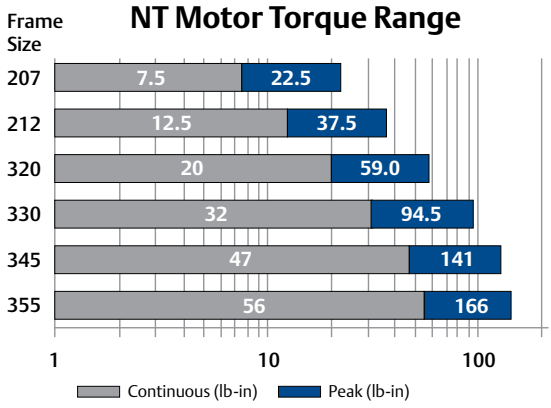


## NT Motor 230 V Order Information

Use the information below to create an order code for an NT Motor (top row is an example).

| NT | E | 2 | 07 | T | B | N | S | DP | 10 |
|---|---|---|---|---|---|---|---|---|---|
| **Motor** | **Mounting Flange** | **Frame Size (in)** | **Rated Torque (lb-in)** | **Lead Configuration** | **Brake (24 V)** | **Feedback Device** | **Inertia** | **Feedback Cable Connectors / Optional Finish** | **Cable Length** |
| NT | **E** = English | **2** = 2† | **2-in frame** | **IP65** | **O** = Unbraked | **N** = Incremental encoder 2048 ppr | **S** = Low | **Lead Configuration C, L, T, E** | **Lead Configuration C, L, T, E** |
| | **M** = Metric | **3** = 3‡ | **07** = 7.5 | **C** = MS connector | | | | **00** = Std. configuration | **00** = Std. configuration |
| | | | **12** = 12.5 | **L** = Flying leads (no connectors) | **B** = Holding Brake | | | **Lead Configuration T** | **Lead Config L, T And F** |
| | | | **3-in frame** | | | | | **DP** = Flying lead with molded 15-pin feedback connector to Digitax ST, Unidrive SP and Epsilon EP | **05** = 5-ft leads |
| | | | **20** = 20 | **T** = MS style connector on flying leads | | | | | **10** = 10-ft leads |
| | | | **30** = 32 | | | | | | **15** = 15-ft leads |
| | | | **45** = 47 | **IP67S** | | | | **Lead Configurations C, L, T, E, F** | **20** = 20-ft leads |
| | | | **55** = 56 | **E** = 90° circular Euro style | | | | **E0** = White epoxy food-grade finish applied to standard motor* | **XX** = Custom lengths available up to 20 ft max. in 2-ft increments |
| | | | | **IP68S** | | | | | |
| | | | | **F** = Flying lead and white epoxy food-grade finish | | | | | |

*Include this code when ordering "F" type lead configuration

NOTES:
†2 = 2-in NEMA 23
‡3 = 3-in NEMA 34

### Approvals

RoHS Compliant

# NT Motor 2-inch Frame Ratings and Dimensions

| Motor Frame Size (in) | | 2 | |
|---|---|---|---|
| Voltage (Vrms) | | 230 | |
| Model | | NT-207 | NT-212 |
| Continuous Stall Torque (lb-in) | | 7.5 | 12.5 |
| Continuous Stall Torque (Nm) | | 0.85 | 1.4 |
| Peak Torque (lb-in) | | 22.5 | 37.5 |
| Peak Torque (Nm) | | 2.54 | 4.24 |
| Inertia (lb-in-sec$^2$) | | 0.000094 | 0.000164 |
| Inertia (kgm$^2$) | | 0.0000106 | 0.0000185 |
| Cogging (lb-in) (typ.) | | 0.094 | 0.12 |
| Cogging (Nm) (typ.) | | 0.011 | 0.014 |
| Motor Weight (lbs) | | 3.0 | 4.0 |
| Motor Weight (kg) | | 1.36 | 1.81 |
| 5000 rpm | Kt (lb-in/A) = | 5.12 | 5.08 |
| 5000 rpm | Kt (Nm/A) = | 0.58 | 0.57 |
| 5000 rpm | Ke (V/k rpm) = | 35 | 34.7 |
| Rated Torque (lb-in) | | 7.50 | 12.50 |
| Rated Torque (Nm) | | 0.85 | 1.4 |
| Stall Current (A) | | 1.7 | 2.7 |
| Rated Power (kW) | | 0.432 | 0.740 |
| R (ph-ph) (Ohms) | | 11.1 | 4.56 |
| L (ph-ph) (mH) | | 39.1 | 18.9 |

NOTES:
- Δt= 212 °F (100 °C) winding 104 °F (40 °C) maximum ambient; all data subject to +/-10% tolerance
- Stall torque, rated torque and power relate to maximum continuous operation above 10 kHz drive switching frequency
- Maximum intermittent winding temperature is 284 °F (140 °C)

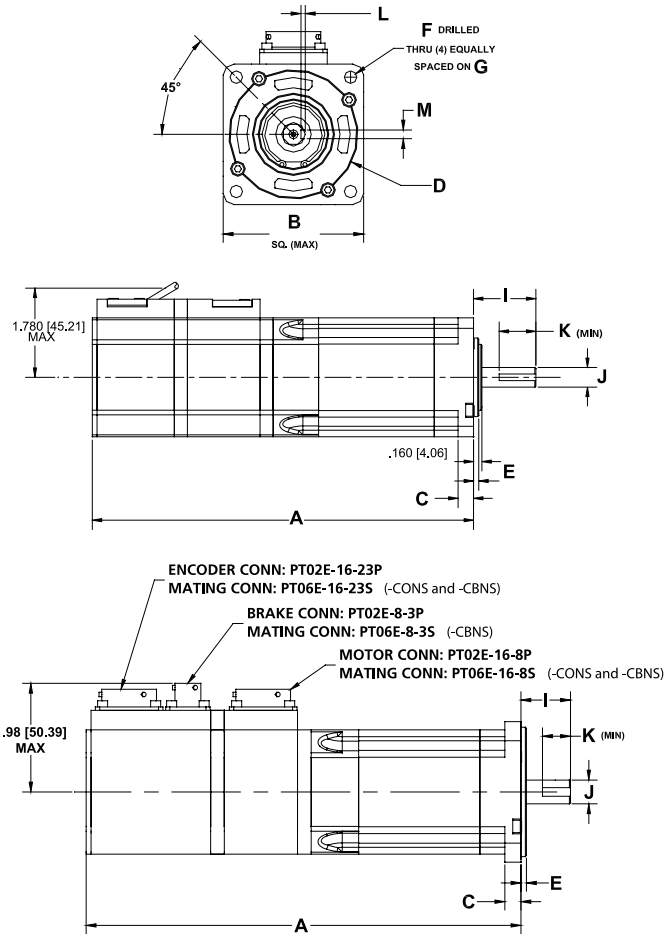


| Motor Dimensions | | English Flange | | | | Metric Flange | | | |
|---|---|---|---|---|---|---|---|---|---|
| | | NTE-207 | | NTE-212 | | NTM-207 | | NTM-212 | |
| | | (in) | (mm) | (in) | (mm) | (in) | (mm) | (in) | (mm) |
| Unbraked Length — CONS/EONS* | A | 5.55 | 141.0 | 6.55 | 166.4 | 5.55 | 141.0 | 6.55 | 166.4 |
| Braked Length — TONS/LONS/FONS | A | 4.39 | 111.5 | 5.39 | 136.9 | 4.39 | 111.5 | 5.39 | 136.9 |
| Unbraked Length — CBNS/EBNS* | A | 6.94 | 176.4 | 7.94 | 201.8 | 6.94 | 176.4 | 7.94 | 201.8 |
| Braked Length — TBNS/LBNS/FBNS | A | 6.28 | 159.4 | 7.94 | 201.8 | 6.28 | 159.4 | 7.28 | 184.8 |
| Flange Square | B | 2.27 | 57.7 | 2.27 | 57.7 | 2.57 | 65.2 | 2.57 | 65.2 |
| Flange Thickness | C | 0.29 | 7.5 | 0.29 | 7.5 | 0.29 | 7.5 | 0.29 | 7.5 |
| Pilot Diameter | D | 1.50 | 38.1 | 1.50 | 38.1 | 2.36 | 60.0 | 2.36 | 60.0 |
| Pilot Thickness | E | 0.10 | 2.5 | 0.10 | 2.5 | 0.10 | 2.5 | 0.10 | 2.5 |
| Bolt Hole Diameter | F | 0.21 | 5.2 | 0.21 | 5.2 | 0.23 | 5.8 | 0.23 | 5.8 |
| Bolt Circle Diameter | G | 2.63 | 66.7 | 2.63 | 66.7 | 2.95 | 75.0 | 2.95 | 75.0 |
| Connector Height — CONS | H | 1.92 | 48.9 | 1.92 | 48.9 | 1.92 | 48.9 | 1.92 | 48.9 |
| Connector Height — TONS/LONS | H | 1.78 | 45.2 | 1.78 | 45.2 | 1.78 | 45.2 | 1.78 | 45.2 |
| Connector Height — CBNS | H | 1.98 | 50.4 | 1.98 | 50.4 | 1.98 | 50.4 | 1.98 | 50.4 |
| Connector Height — TBNS/LBNS | H | 1.78 | 45.2 | 1.78 | 45.2 | 1.78 | 45.2 | 1.78 | 45.2 |
| Shaft Length | I | 1.21 | 30.7 | 1.21 | 30.7 | 0.93 | 23.5 | 0.93 | 23.5 |
| Shaft Diameter | J | 0.37 | 9.5 | 0.37 | 9.5 | 0.43 | 11.0 | 0.43 | 11.0 |
| Shaft Key Dimensions | | | | | | Shaft Key Dimensions | | | |
| Keyway Length (min) | K | 0.70 | 17.8 | 0.70 | 17.8 | 0.51 | 13.0 | 0.51 | 13.0 |
| Keyway Depth | L | 0.08 | 2.0 | 0.08 | 2.0 | 0.08 | 2.1 | 0.08 | 2.1 |
| Keyway Width | M | 0.13 | 3.2 | 0.13 | 3.2 | 0.16 | 4.0 | 0.16 | 4.0 |

NOTE:
*Not all variations are represented above; see our website for complete mechanical dimension drawings

# NT Motor 3-inch Frame Ratings and Dimensions

| Motor Frame Size (in) | | 3 | | | |
|---|---|---|---|---|---|
| Voltage (Vrms) | | 230 | | | |
| Model | | NT-320 | NT-330 | NT-345 | NT-355 |
| Continuous Stall Torque (lb-in) | | 19.7 | 31.5 | 47.5 | 55.5 |
| Continuous Stall Torque (Nm) | | 2.2 | 3.56 | 5.31 | 6.27 |
| Inertia (lb-in-sec$^2$) | | 0.000328 | 0.000438 | 0.000668 | 0.000888 |
| Inertia (kgm$^2$) | | 0.000037 | 0.000049 | 0.000075 | 0.000100 |
| Peak Torque (lb-in) | | 59.0 | 94.5 | 141.0 | 166.0 |
| Peak Torque (Nm) | | 6.67 | 10.68 | 15.93 | 18.75 |
| Cogging (lb-in) (typ.) | | 0.18 | 0.315 | 0.47 | 0.555 |
| Cogging (Nm) (typ.) | | 0.020 | 0.036 | 0.053 | 0.063 |
| Motor Weight (lbs) | | 6.0 | 7.3 | 10.0 | 12.3 |
| Motor Weight (kg) | | 2.72 | 3.31 | 4.54 | 5.58 |
| 3000 rpm | Kt (lb-in/A) = | | | 7.13 | 7.30 |
| | Kt (Nm/A) = | | | 0.806 | 0.825 |
| | Ke (V/k rpm) = | | | 50.0 | 50.0 |
| Rated Torque (lb-in) | | | | 47.0 | 55.5 |
| Rated Torque (Nm) | | | | 5.31 | 6.27 |
| Stall Current (A) | | | | 6.59 | 7.6 |
| Rated Power (kW) | | | | 1.668 | 1.97 |
| R (ph-ph) (Ohms) | | | | 1.3 | 1.0 |
| L (ph-ph) (mH) | | | | 17.0 | 13.0 |
| 4000 rpm | Kt (lb-in) = | 3.50 | 5.04 | | |
| | Kt (Nm/A) = | 0.40 | 0.569 | | |
| | Ke (V/k rpm) = | 29.0 | 36.0 | | |
| Rated Torque (lb-in) | | 16.0 | 31.6 | | |
| Rated Torque (Nm) | | 1.8 | 3.56 | | |
| Stall Current (A) | | 5.4 | 6.25 | | |
| Rated Power (kW) | | 0.757 | 1.49 | | |
| R (ph-ph) (Ohms) | | 1.5 | 1.2 | | |
| L (ph-ph) (mH) | | 16.0 | 15.0 | | |

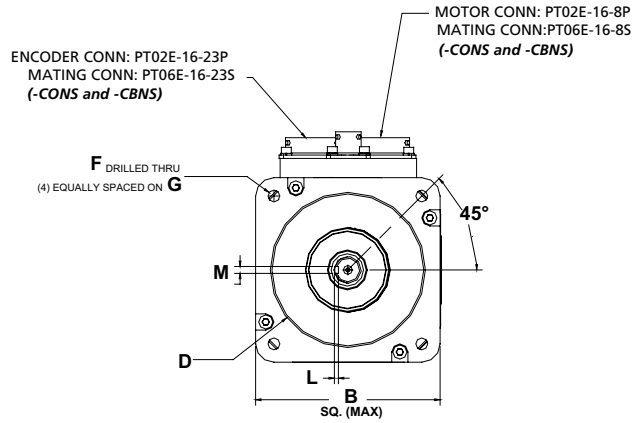


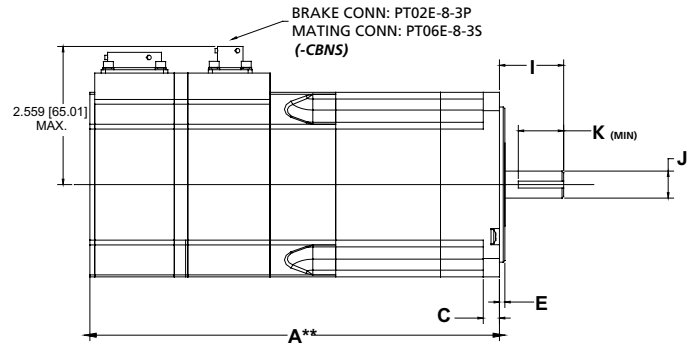


NOTES:
- Δt= 212 °F (100 °C) winding 104 °F (40 °C) maximum ambient; all data subject to +/-10% tolerance
- Stall torque, rated torque and power relate to maximum continuous operation above 10 kHz drive switching frequency
- Max. intermittent winding temperature is 284 °F (140 °C)

| Motor Dimensions | | English Flange | | | | | | | | Metric Flange | | | | | | | |
|---|---|---|---|---|---|---|---|---|---|---|---|---|---|---|---|---|---|
| | | NTE-320 | | NTE-330 | | NTE-345 | | NTE-355 | | NTM-320 | | NTM-330 | | NTM-345 | | NTM-355 | |
| | | (in) | (mm) | (in) | (mm) | (in) | (mm) | (in) | (mm) | (in) | (mm) | (in) | (mm) | (in) | (mm) | (in) | (mm) |
| Unbraked Length — CONS/EONS* | A | 5.22 | 132.5 | 5.82 | 147.8 | 7.02 | 178.3 | 9.42 | 239.2 | 5.22 | 132.5 | 5.82 | 147.8 | 7.02 | 178.3 | 9.42 | 239.2 |
| Braked Length — TONS/LONS/FONS | A | 5.22 | 132.5 | 5.82 | 147.8 | 7.02 | 178.3 | 9.43 | 239.6 | 5.22 | 132.5 | 5.82 | 147.8 | 7.02 | 178.3 | 9.43 | 239.6 |
| Unbraked Length — CBNS/EBNS* | A | 7.24 | 184.0 | 7.84 | 199.2 | 9.04 | 229.7 | 11.44 | 290.7 | 7.24 | 184.0 | 7.84 | 199.2 | 9.04 | 229.7 | 11.44 | 290.7 |
| Braked Length — TBNS/LBNS/FBNS | A | 7.24 | 184.0 | 7.84 | 199.2 | 9.04 | 229.7 | 11.44 | 290.7 | 7.24 | 184.0 | 7.84 | 199.2 | 9.04 | 229.7 | 11.44 | 290.7 |
| Flange Square | B | 3.42 | 86.9 | 3.42 | 86.9 | 3.42 | 86.9 | 3.42 | 86.9 | 3.42 | 86.9 | 3.42 | 86.9 | 3.42 | 86.9 | 3.42 | 86.9 |
| Flange Thickness | C | 0.30 | 7.6 | 0.30 | 7.6 | 0.30 | 7.6 | 0.30 | 7.6 | 0.30 | 7.6 | 0.30 | 7.6 | 0.30 | 7.6 | 0.30 | 7.6 |
| Pilot Diameter | D | 2.88 | 73.0 | 2.88 | 73.0 | 2.88 | 73.0 | 2.88 | 73.0 | 3.15 | 80.0 | 3.15 | 80.0 | 3.15 | 80.0 | 3.15 | 80.0 |
| Pilot Thickness | E | 0.10 | 2.5 | 0.10 | 2.5 | 0.10 | 2.5 | 0.10 | 2.5 | 0.12 | 3.0 | 0.12 | 3.0 | 0.12 | 3.0 | 0.12 | 3.0 |
| Bolt Hole Diameter | F | 0.22 | 5.6 | 0.22 | 5.6 | 0.22 | 5.6 | 0.22 | 5.6 | 0.28 | 7.0 | 0.28 | 7.0 | 0.28 | 7.0 | 0.28 | 7.0 |
| Bolt Circle Diameter | G | 3.88 | 98.4 | 3.88 | 98.4 | 3.88 | 98.4 | 3.88 | 98.4 | 3.94 | 100.0 | 3.94 | 100.0 | 3.94 | 100.0 | 3.94 | 100.0 |
| Connector Height — CONS | H | 2.45 | 62.2 | 2.45 | 62.2 | 2.45 | 62.2 | 2.45 | 62.2 | 2.45 | 62.2 | 2.45 | 62.2 | 2.45 | 62.2 | 2.45 | 62.2 |
| Connector Height — TONS/LONS | H | 2.35 | 59.7 | 2.35 | 59.7 | 2.35 | 59.7 | 2.35 | 59.7 | 2.35 | 59.7 | 2.35 | 59.7 | 2.35 | 59.7 | 2.35 | 59.7 |
| Connector Height — CBNS | H | 2.56 | 65.0 | 2.56 | 65.0 | 2.56 | 65.0 | 2.56 | 65.0 | 2.56 | 65.0 | 2.56 | 65.0 | 2.56 | 65.0 | 2.56 | 65.0 |
| Connector Height — TBNS/LBNS | H | 2.50 | 63.5 | 2.50 | 63.5 | 2.50 | 63.5 | 2.50 | 63.5 | 2.50 | 63.5 | 2.50 | 63.5 | 2.50 | 63.5 | 2.50 | 63.5 |
| Shaft Length | I | 1.21 | 30.7 | 1.21 | 30.7 | 1.21 | 30.7 | 1.21 | 30.7 | 1.21 | 30.7 | 1.21 | 30.7 | 1.21 | 30.7 | 1.21 | 30.7 |
| Shaft Diameter | J | 0.50 | 12.7 | 0.50 | 12.7 | 0.50 | 12.7 | 0.50 | 12.7 | 0.55 | 14.0 | 0.55 | 14.0 | 0.55 | 14.0 | 0.55 | 14.0 |
| Shaft Key Dimensions | | | | | | | | | | Shaft Key Dimensions | | | | | | | |
| Keyway Length (min) | K | 0.84 | 21.3 | 0.84 | 21.3 | 0.84 | 21.3 | 0.84 | 21.3 | 0.79 | 20.0 | 0.79 | 20.0 | 0.79 | 20.0 | 0.79 | 20.0 |
| Keyway Depth | L | 0.08 | 2.0 | 0.08 | 2.0 | 0.08 | 2.0 | 0.08 | 2.0 | 0.10 | 2.6 | 0.10 | 2.6 | 0.10 | 2.6 | 0.10 | 2.6 |
| Keyway Width | M | 0.13 | 3.2 | 0.13 | 3.2 | 0.13 | 3.2 | 0.13 | 3.2 | 0.20 | 5.1 | 0.20 | 5.1 | 0.20 | 5.1 | 0.20 | 5.1 |

NOTE:
*Not all variations are represented above; see our website for complete mechanical dimension drawings

# NT Motor Flying Lead and Connector Details

### LBNS, LONS

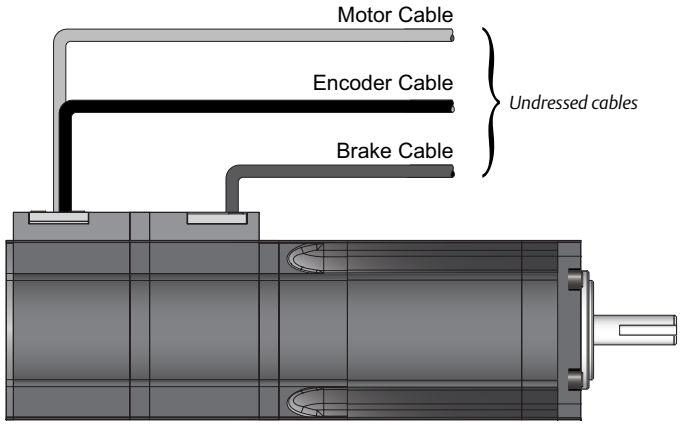


### TBNS, TONS

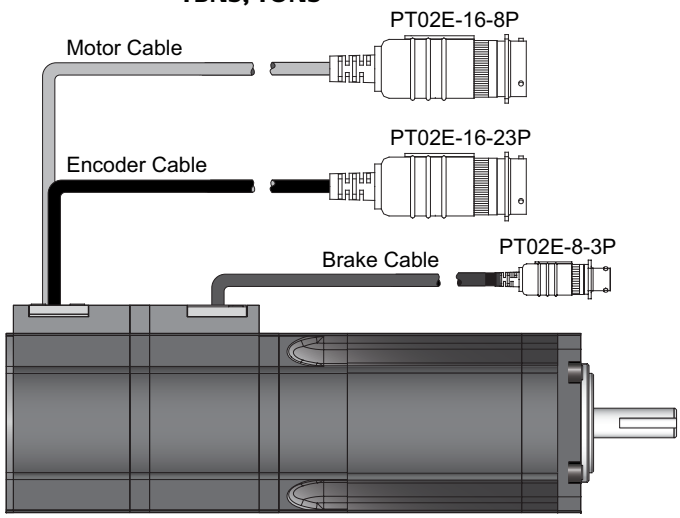


### TBNS-DP, TONS-DP

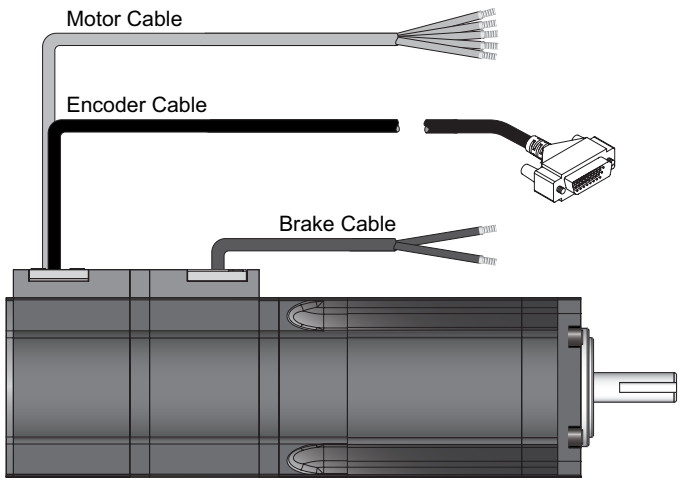


NOTE:
DP models include connector terminations specifically for Unidrive M, Unidrive SP, Epsilon EP and Digitax ST (DP-15)

# NT Motor Flying Lead and Connector Details

**FBNS, FONS**

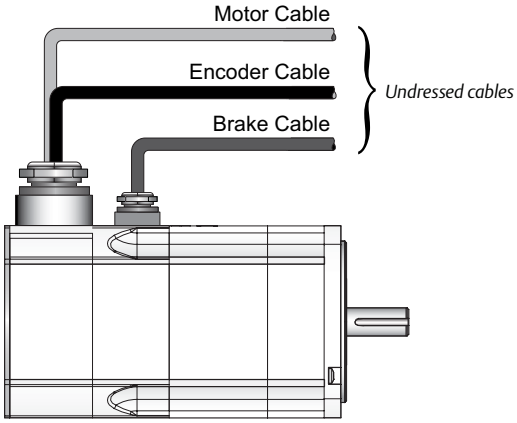


**EBNS, EONS**

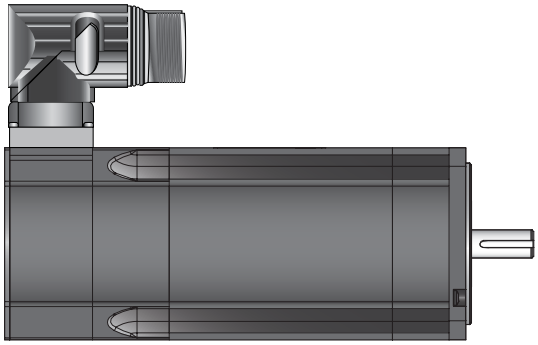

**CBNS, CONS**

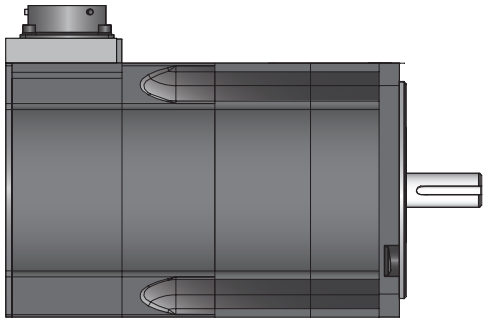

# NT Motor Selection Considerations

## Feedback Options

| Feedback Device Order Code | Feedback Type | Encoder Supply Voltage | SinCos or Incremental Pulses per Revolution | Resolution Available to Position Loop | Feedback Accuracy |
|---|---|---|---|---|---|
| -T_NS, -C_NS, -L_NS, -E_NS, -F_NS | Incremental Encoder | 5 Vdc | 2048 | 16384 (14 bits) | ±600 arc sec. |

## Motor Selection

### Motor Derating

Any adverse operating conditions require that the motor performance be derated. These conditions include ambient temperature above 104 °F (40 °C), motor mounting position, drive switching frequency or a drive oversized for the motor.

### Drive Switching Frequency

Most drive current ratings are reduced at higher switching frequencies. See individual drive manuals for details.

### Mounting Arrangements

In general, motor torque should be derated if the motor mounting surface is heated from an external source such as a gearbox, the motor is connected to a poor thermal conductor, or the motor is mounted in a confined space with restricted air flow.

### Thermal Test Conditions

The performance data shown was recorded with an ambient temperature of 68 °F (20 °C) and the motor mounted on a thermally-isolated aluminum plate.

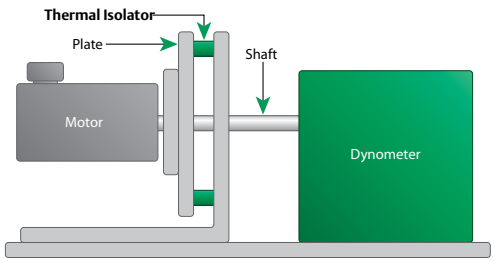


| Motor Model | Frame Size | Mounting Plate Dimensions |
|---|---|---|
| NT | 2" | 6" x 6" x ¼" |
| | 3" | 10" x 10" x 3/8" |

### Brake Operation

Do not apply the brake while the motor shaft is rotating. The brake can only take a limited number of emergency braking operations and must not be used for repeated dynamic braking.

### Thermal Protection

Thermistor protection to 284 °F (140 °C) is built into the motor windings and gives an indication of serious overheating problems. **The installer must connect the thermistor to the drive. Failure to do so will invalidate the motor warranty if winding burns out.**

### Environmental Conditions

Any liquids or gases that may come into contact with the motor must be confirmed to ensure compliance with the correct international standards.

### Ingress Protection

All NT Motors have shaft seals installed as standard. Standard models have an ingress rating (IP rating) of IP65. Lead configuration "E" models are rated IP67S. Configuration "F" models are rated IP68S.

### NT Motor Holding Brake Specifications

| Motor Frame Size | Power Supply | Current | Static Torque | | Mechanical Release Time | Mechanical Engagement Time | Added Inertia | |
|---|---|---|---|---|---|---|---|---|
| (in) | (Vdc) | (A) | (lb-in) | (Nm) | (ms) | (ms) | (lb-in-sec²) | (kgm²) |
| 2 | 24 | 0.33 | 20.0 | 2.26 | 28.0 | 14.0 | 0.000106 | 0.000012 |
| 3 | 24 | 0.65 | 88.5 | 10.0 | 43.0 | 13.0 | 0.000968 | 0.000109 |