VS1PF AC Drive for Pump and Fan Applications

1/10 **Installation & Operating Manual** MN763

Important:
Be sure to check www.baldor.com for the latest software, firmware and drivers for your VS1 product. Also you can download the latest version of this manual in Adobe Acrobat PDF format.

Table of Contents

Chapter 5
Control Wiring

Chapter 6
Using the Keypad

Chapter 7
Parameter Descriptions

Chapter 8
Customizing For Your Application

Chapter 9
Troubleshooting and Maintenance

Chapter 1
Introduction

The VS1PF is a variable frequency drive with features to support the pump and fan market as well as providing functionality that can be used to control many other variable speed applications. This manual is intended for qualified electrical personnel familiar with installing, programming, and maintaining AC Drives.

This manual contains information on:
- Installing and wiring the VS1PF drive
- Programming the drive
- Troubleshooting the drive

1.1 Getting Assistance from Baldor

For technical assistance, call your local Baldor District Sales Office. Before calling, please review the troubleshooting section of this manual and check the Baldor website at www.baldor.com for additional information. When you call technical support, you will be asked for the drive model number or catalog number and this instruction manual number.

1.2 Safety Notice

This equipment contains voltages that my be as high as 1000 volts! Electrical shock can cause serious or fatal injury. Only qualified personnel should attempt the start-up procedure or troubleshoot this equipment. This equipment may be connected to other machines that have rotating parts or parts that are driven by this equipment. Improper use can cause serious or fatal injury. Only qualified personnel should attempt the startup procedure or troubleshoot this equipment.

CLASSIFICATIONS OF CAUTIONARY STATEMENTS

WARNING: Indicates a potentially hazardous situation which, if not avoided, could result in injury or death.

CAUTION: Indicates a potentially hazardous situation which, if not avoided, could result in damage to property.

PRECAUTIONS

WARNING: This manual is intended as a guide for proper installation. Baldor Electric Company cannot assume responsibility for the compliance or the noncompliance to any code, national, local or otherwise, for the proper installation of this drive or associated equipment. A hazard of personal injury and/or equipment exists if codes are ignored during installation.

WARNING: Only qualified electrical personnel familiar with the construction and operation of this equipment and the hazards involved should install, adjust, operate, or service this equipment. Read and understand this manual and other applicable manuals in their entirety before proceeding. Failure to observe this precaution could result in severe bodily injury or loss of life.

WARNING: Do not touch any circuit board, power device or electrical connection before you first ensure that power has been disconnected and there is no high voltage present from this equipment or other equipment to which it is connected. Electrical shock can cause serious or fatal injury. Only qualified personnel should attempt the start up procedure or troubleshoot this equipment.

WARNING: **Be sure that you are completely familiar with the safe operation of this equipment. This equipment may be connected to other machines that have rotating parts or parts that are controlled by this equipment. Improper use can cause serious or fatal injury. Only qualified personnel should attempt the start-up procedure or troubleshoot this equipment.**

WARNING: **Do not use motor overload relays with an automatic reset feature. These are dangerous since the process may injure someone if a sudden or unexpected automatic restart occurs. If manual reset relays are not available, disable the automatic restart feature using external control wiring.**

WARNING: **This unit has an automatic restart feature that will start the motor whenever input power is applied and a RUN (FWD or REV) command is issued. If an automatic restart of the motor could cause injury to personnel, the automatic restart feature of the VS1PF should be disabled.**

WARNING: **Be sure the system is properly grounded before applying power. Do not apply AC power before you ensure that all grounding instructions have been followed. Electrical shock can cause serious or fatal injury.**

WARNING: **Do not remove cover for at least ten (10) minutes after AC power is disconnected to allow capacitors to discharge. Dangerous voltages are present inside the equipment. Electrical shock can cause serious or fatal injury.**

WARNING: **Improper operation of control may cause violent motion of the motor shaft and driven equipment. Be certain that unexpected motor shaft movement will not cause injury to personnel or damage to equipment. Certain failure modes of the control can produce peak torque of several times the rated motor torque.**

WARNING: **Motor circuit may have high voltage present whenever AC power is applied, even when motor is not rotating. Electrical shock can cause serious or fatal injury.**

WARNING: **Unexpected motor start will occur when the BX terminal is turned OFF. The user must ensure that automatic start up of the driven equipment will not cause injury to operating personnel or damage to the driven equipment. In addition, the user is responsible for providing suitable audible or visual alarms or other devices to indicate that this function is enabled and the drive may start at any moment. Failure to observe this precaution could result in severe bodily injury or loss of life.**

WARNING: **Dynamic brake resistors may generate enough heat to ignite combustible materials. Keep all combustible materials and flammable vapors away from brake resistors.**

WARNING: **You must provide an external, hardwired emergency stop circuit outside of the drive circuitry. This circuit must disable the system in case of improper operation. Uncontrolled machine operation can result if this procedure is not followed. Failure to observe this precaution could result in bodily injury.**

WARNING: **This drive contains high voltage capacitors that take time to discharge after removal of main supply. Before working on the drive, ensure isolation of main supply from line inputs. Wait ten (10) minutes for capacitors to discharge to safe voltage levels. Failure to observe this precaution could result in severe bodily injury or loss of life.**

WARNING: **DC Bus capacitors retain hazardous voltages after input power has been disconnected. After disconnecting input power, wait ten (10) minutes for the DC Bus capacitors to discharge and then check the voltage with a voltmeter to ensure the DC bus capacitors are discharged before touching any internal components. Failure to observe this precaution could result in severe bodily injury or loss of life.**

WARNING: **Be sure to perform maintenance only after checking that the bus has discharged to less than 30 VDC. The bus capacitors may retain a charge after power is turned off. Failure to observe this precaution could result in sever bodily injury or loss of life.**

WARNING: **The drive start/stop control circuitry includes solid-state components. If hazards due to accidental contact with moving machinery or unintentional flow of liquid, gas or solids exist, an additional hardwired stop circuit may be required to remove the AC line to the drive. When the AC line is removed, there will be a loss of any inherent regenerative braking effect that might be present - the motor will coast to a stop. An auxiliary braking method may be required.**

WARNING: **The motor shaft may rotate during the tuning procedure. Be certain that unexpected motor shaft movement will not cause injury to personnel or damage to equipment.**

WARNING: **Auto-tuning enables the drive and motor rotation may occur. Be certain that unexpected motor shaft movement will not cause injury to personnel or damage to equipment. Failure to observe this precaution could result in severe bodily injury or loss of life.**

WARNING: **Caution must be exercised when the Inverter Temperature function is enabled as the motor will start to run automatically after AC input power is applied. Personal injury may result if caution is not exercised.**

WARNING: **Caution must be exercised when the Restart After Fault Reset Selection is enabled, as the motor will start to run automatically after the fault is reset. Personal injury may result if caution is not exercised.**

WARNING: **Caution must be exercised when the Number of Auto-Restart Tries is enabled, as the motor will start to run automatically after the fault is reset. Personal injury may result if caution is not exercised.**

WARNING: **Do not touch the inverter with hands or other objects while performing the Self-Diagnostic Function because current is flowing to the inverter output. Personal injury may result if caution is not exercised.**

WARNING: **Be sure to disconnect and lock out the drive input power while performing maintenance. Wait ten (10) minutes for capacitors to discharge to safe voltage levels before removing the cover to the drive. Failure to observe this precaution could result in severe bodily injury or loss of life.**

WARNING: **Be sure to verify that the DC bus has discharged before performing maintenance on the drive. After disconnecting incoming power and waiting ten (10) minutes, remove cover and ensure voltage is not present on the drive power input terminals. Verify that the DC bus voltage has discharged to a level less than 30Vdc by measuring across terminals P2(+) to N(-) with a digital voltmeter set for DC voltage measurements. Failure to observe this precaution could result in severe bodily injury or loss of life.**

WARNING: **Do not remove the cover of the Dynamic Braking Unit while power is applied or the unit is in operation; otherwise electric shock could occur.**

WARNING: **Do not run the Dynamic Braking Unit (DBU) with the front cover removed. Failure to comply could result in electric shock due to high voltage terminals or charged capacitor exposure.**

WARNING: **Do not remove the cover except for periodic inspections or wiring, even if the input power is not applied; otherwise, you may contact live parts causing an electric shock.**

WARNING: **Wiring and periodic inspections should be performed at least 10 minutes after disconnecting the input power and after checking the DC link voltage is discharged with a meter (below DC 30V); otherwise, you may get an electric shock.**

WARNING: **Operate the switches with dry hands; otherwise, you may get an electric shock.**

WARNING: **Do not use wire or cable with damaged insulation; otherwise, you may get an electric shock.**

WARNING: **Do not subject wires and cables to scratches, excessive stress, heavy loads or pinching; otherwise, you may get an electric shock.**

WARNING: Install the Dynamic Braking Unit (DB unit) on a non-flammable surface. Do not place flammable material nearby; otherwise, fire could occur.

WARNING: Disconnect the input power if the inverter or DB unit gets damaged; otherwise, the result could be a secondary accident and fire.

WARNING: Do not connect the braking resistor directly to the DC terminal (P/B1, N) of the DB unit; otherwise, fire could occur.

WARNING: Do not touch DB unit, Inverter and the resistor right after the power is disconnected. The resistor may still be hot.

WARNING: Do not allow lint, paper, wood chips, dust, metallic chips or other foreign matter into the DB unit; otherwise, fire or accident could occur.

WARNING: Do not apply power to a damaged inverter or to DB unit with missing parts even if the installation is complete; otherwise, electric shock or fire could occur.

WARNING: MEDICAL DEVICE/PACEMAKER DANGER - Magnetic and electromagnetic fields in the vicinity of current carrying conductors and industrial motors can result in a serious health hazard to persons with cardiac pacemakers, internal cardiac defibrillators, neurostimulators, metal implants, cochlear implants, hearing aids, and other medical devices. To avoid risk, stay away from the area surrounding a motor and its current carrying conductors.

CAUTION: The user is responsible for conforming with all applicable local, national, and international codes. Failure to observe this precaution could result in damage to, or destruction of, the equipment.

CAUTION: Disconnect motor leads (U, V & W) from control before you perform a dielectric withstand test on the motor. Failure to disconnect motor from the control will result in extensive damage to the control. The control is tested at the factory for high voltage / leakage resistance as part of Underwriter Laboratory requirements.

CAUTION: Do not connect AC power to the Motor terminals U, V and W. Connecting AC power to these terminals may result in damage to the control.

CAUTION: Baldor recommends not to use “Grounded Leg Delta” transformer power leads that may create ground loops. Instead, we recommend using a four wire Wye.

CAUTION: Only Baldor cables should be used to connect the keypad and control. These are special cables to protect the control and keypad. Damage associated with other cable types are not covered by the Baldor warranty.

CAUTION: If an M-Contactor is installed, the control must be disabled for at least 200mSec before the M-Contactor is opened. If the M-Contactor is opened while the control is supplying voltage and current to the motor, the control may be damaged. Before the control is enabled, the M-Contactor must be closed for at least 200mSec.

CAUTION: Use of power correction capacitors on the output of the drive can result in erratic operation of the motor, nuisance tripping, and/or permanent damage to the drive. Remove power correction capacitors before proceeding. Failure to observe this precaution could result in damage to, or destruction of, the equipment.

CAUTION: Suitable for use on a circuit capable of delivering not more than 65,000 RMS symmetrical amperes. 240V drives or 480V drives volts maximum, 7.5 HP - 700 HP.

CAUTION: Apply the rated torque to terminal screws. Loose screws can cause short circuit and malfunction. Tightening the screws too much can damage the terminals and cause short circuit and malfunction.

CAUTION: Do not leave wire fragments inside the inverter. Wire fragments can cause faults, breakdowns and malfunctions.

CAUTION: A contactor or other device that routinely disconnects and rapplies the AC line to the drive to start and stop the motor can cause drive hardware damage. The drive is designed to use control input signals that will start and stop the motor. If used, the input device must not exceed one operations per minute or drive damage can occur. Failure to observe this precaution can result in damage to, or destruction of equipment.

CAUTION: Driving the 4-20mA analog input from a voltage source could cause component damage. Verify proper configuration prior to applying input signals.

CAUTION: Operating the drive prior to correcting the cause of the Over Current Fault may permanently damage the output IGBT power transistors.

CAUTION: The motor may be overheated by frequent use of the Flux Brake function.

CAUTION: When using a standard induction motor, setting the voltage/frequency (V/F) ratio value much higher than linear V/F pattern could result in torque shortage or motor overheating due to over-energizing.

CAUTION: If the boost value is set too high, it may cause motor overheating or over saturation.

1.3 Unpacking and Inspection

1. Remove the inverter from its packing and inspect its exterior for shipping damage. If damage is apparent, notify the shipping agent and your sales representative.

2. Remove the cover and inspect the inverter for any apparent damage or foreign objects. Ensure that all mounting hardware and terminal connection hardware is properly seated, securely fastened, and undamaged.

3. Check the nameplate on the VS1PF inverter. Verify that the inverter unit is the correct horsepower and input voltage for the application.

Chapter 2

General Information and Ratings

The VS1PF is a variable frequency PWM drive capable of operating in open-loop, volts-per-hertz mode and in a sensorless vector control (SVC) mode.
This chapter contains information about the VS1PF drive, including how to identify the drive.

2.1 Identifying the Drive by Catalog Number

Each drive can be identified by its catalog number, as shown in Figure 2-1. The catalog number is on the shipping label and the drive nameplate. The catalog number includes the drive and any options. Drive catalog numbers for the VS1PF drive are provided in Table 2-1.

Figure 2-1 Identifying the Drive by Catalog Number

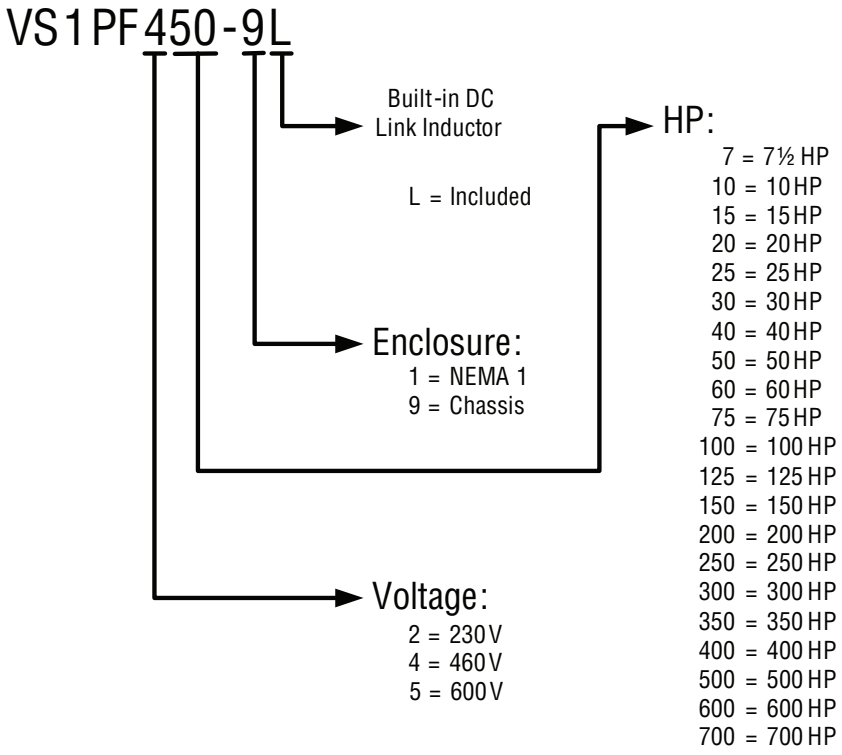

Table 2-1 provides drive ratings for VS1PF models.

Table 2-1 Drive Ratings, Catalog Numbers and Frame Sizes

Catalog Number	Input Volt	Frame Size	Output						Watts Loss (Watts)
			Normal Duty			Heavy Duty			
			HP	KW	Continuous Amps	HP	KW	Continuous Amps	
VS1PF27-1	230	A	7.5	5.5	24	5	3.7	17	222
VS1PF210-1	230	B	10	7.5	32	7.5	5.5	23	285
VS1PF215-1	230	B	15	11	46	10	7.5	33	425
VS1PF220-9	230	C	20	15	60	15	11	44	485
VS1PF225-9	230	C	25	18.5	74	20	15	54	552
VS1PF-230-9	230	E	30	22	88	25	18.5	68	532
VS1PF-240-9	230	E	40	30	115	30	22	84	680
VS1PF47-1	460	A	7.5	5.5	12	5	3.7	8	189
VS1PF410-1	460	B	10	7.5	16	7.5	5.5	11	263
VS1PF-415-1	460	B	15	11	24	10	7.5	17	326
VS1PF-420-9	460	C	20	15	30	15	11	22	335
VS1PF425-9	460	C	25	18.5	39	20	15	28	423
VS1PF430-9	460	E	30	22	45	25	18.5	34	488
VS1PF440-9	460	E	40	30	61	30	22	44	680
VS1PF450-9	460	G	50	37	75	40	30	55	1188
VS1PF460-9	460	G	60	45	91	50	37	66	1214
VS1PF475-9	460	H	75	55	110	60	45	80	1762
VS1PF4100-9	460	L	100	75	152	75	55	111	2886
VS1PF4125-9	460	L	125	90	183	100	75	134	2865
VS1PF4150-9L*	460	N	150	110	223	125	90	164	2834
VS1PF4200-9L*	460	N	200	132	264	150	110	194	3164
VS1PF4250-9L*	460	P	250	160	325	200	132	240	3834
VS1PF4300-9L*	460	R	300	200	413	250	160	317	4214
VS1PF4350-9L*	460	R	350	220	432	250	200	317	4214
VS1PF4400-9L*	460	R	400	280	547	300	200	401	5414
VS1PF4500-9	460	S	500	315	613	350	220	450	6108
VS1PF4600-9	460	T	600	375	731	400	280	536	7314
VS1PF4700-9	460	T	700	450	877	500	315	643	8814

* These models include a built-in DC link inductor.

Table 2-1 Drive Ratings, Catalog Numbers and Frame Sizes Continued

Catalog Number	Input Volt	Frame Size	Output						Watts Loss (Watts)
			Normal Duty			Heavy Duty			
			HP	KW	Continuous Amps	HP	KW	Continuous Amps	
VS1PF57-1	600	A	7.5	5.5	9	5	3.7	6.1	204**
VS1PF510-1	600	A	10	7.5	12	7.5	5.5	9	238**
VS1PF515-1	600	A	15	11	17	10	7.5	12	325**
VS1PF520-9	600	C	20	15	23	15	11	17	441**
VS1PF525-9	600	C	25	18.5	27	20	15	23	502**
VS1PF530-9	600	E	30	22	34	25	18.5	27	643**
VS1PF540-9	600	E	40	30	43	30	22	34	791**
VS1PF550-9	600	H	50	37	55	40	30	43	1038**
VS1PF560-9	600	H	60	45	64	50	37	55	1177**
VS1PF575-9	600	H	75	55	80	60	45	64	1438**
VS1PF5100-9	600	L	100	75	104	75	55	80	1903**
VS1PF5125-9	600	L	125	90	128	100	75	104	2251**
VS1PF5150-9L*	600	N	150	110	150	125	90	128	2724**

* These models include a built-in DC link inductor.
** Watts Loss data is an estimated value.

2.2 Storage Guidelines

If you need to store the drive, follow these recommendations to prolong drive life and performance:

- Store the drive within an ambient temperature range of -20° to +65°C.
- Store the drive within a relative humidity range of 0% to 90%, non-condensing.
- Do not expose the drive to a corrosive atmosphere.

Chapter 3

Installing the Drive

This chapter provides information that must be considered when planning a VS1PF drive installation and provides drive mounting information and installation site requirements.

WARNING: **Only qualified electrical personnel familiar with the construction and operation of this equipment and the hazards involved should install, adjust, operate, or service this equipment. Read and understand this manual and other applicable manuals in their entirety before proceeding. Failure to observe this precaution could result in severe bodily injury or loss of life.**

CAUTION: **Use of power correction capacitors on the output of the drive can result in erratic operation of the motor, nuisance tripping, and/or permanent damage to the drive. Remove power correction capacitors before proceeding. Failure to observe this precaution could result in damage to, or destruction of, the equipment.**

CAUTION: **The user is responsible for conforming with all applicable local, national, and international codes. Failure to observe this precaution could result in damage to, or destruction of, the equipment.**

3.1 General Requirements for the Installation Site

It is important to plan properly before installing a VS1PF to ensure that the drive's environment and operating conditions are satisfactory.

The area behind the drive must be kept clear of all control and power wiring. Power connections may create electromagnetic fields that may interfere with control wiring or components when run in close proximity to the drive.

Read the recommendations in the following sections before continuing with the drive installation. Handle the inverter with care to prevent damage to the plastic components. Do not hold the inverter by the front cover.

Do not mount the inverter in a location where excessive vibration (0.6G or above) is present such as on a press or other moving equipment.

3.1.1 Operating Conditions

Before deciding on an installation site, consider the following guidelines:
- Protect the cooling fan by avoiding dust or metallic particles.
- Do not expose the drive to a corrosive atmosphere.
- Protect the drive from moisture and direct sunlight.
- Verify that the drive location will meet the environmental conditions specified in Table 3-1.

Table 3-1 Ambient Temperatures and Mounting Clearances

Ambient Temperature		Derate	Minimum Mounting Clearances
Minimum	Maximum		
-10°C (14°F)	50°C (122°F)	20%	2" (50mm)
	40°C (104°F)	0%	

Install in a location where temperature is within the permissible range.

Figure 3-1 Mounting Clearances

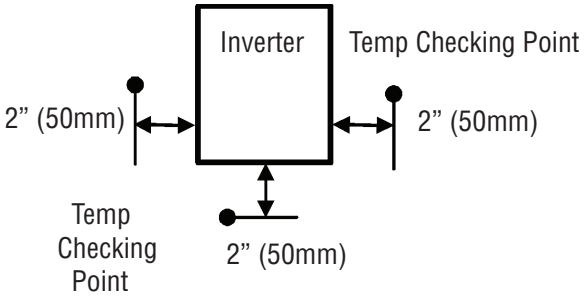

3.1.2 Minimum Mounting Clearances

Refer to Figure 3-2 for the minimum mounting clearances. Refer to Section 3.3 for drive mounting dimensions.

Figure 3-2 Minimum Mounting Clearances

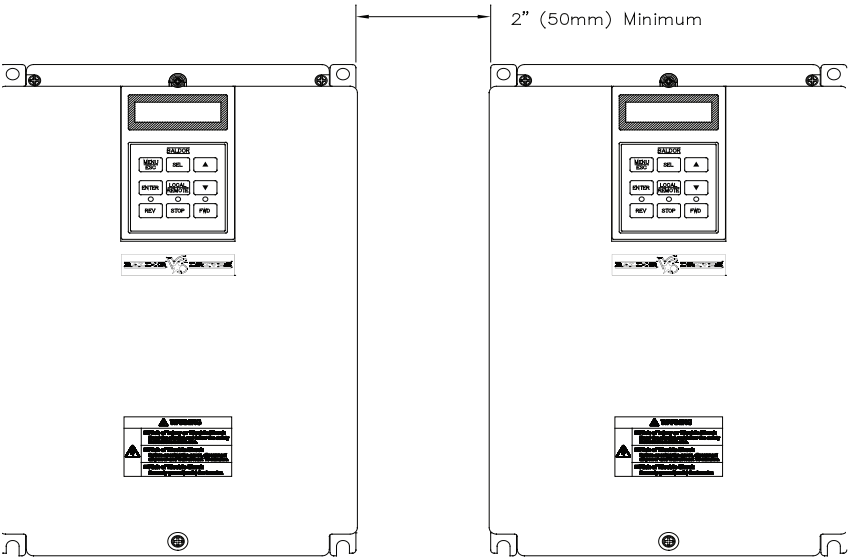

The inverter will be very hot during operation. Install on a non-combustible surface.

Mount the inverter on a flat, vertical and level surface. During operation, the inverter must be in a vertical position (top up) to allow proper heat dissipation. Also leave sufficient clearances around the inverter.

Figure 3-3 Recommended Cabinet Layout

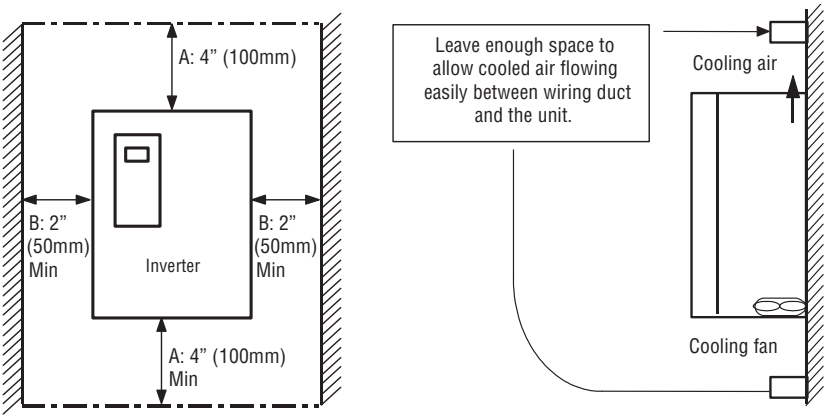

Do not mount the inverter in direct sunlight or near other heat sources.

The inverter should be mounted in a Pollution Degree 2 environment (an environment where non-conducting pollution is allowed with temporary conductivity due to condensation). If the inverter is going to be installed in an environment with a high level of dust, metallic particles, mists, corrosive gases, or other contaminates, the inverter must be located inside the appropriate electrical enclosure with the proper NEMA or IP rating.

When two or more inverters are installed or a ventilation fan is mounted in the inverter panel, the inverters and ventilation fan must be installed in the proper configuration with extreme care taken to keep the ambient temperature of the inverters below the permissible value. If they are installed in improper positions, the ambient temperature of the inverters will rise.

Figure 3-4 Proper Ventilation Configuration

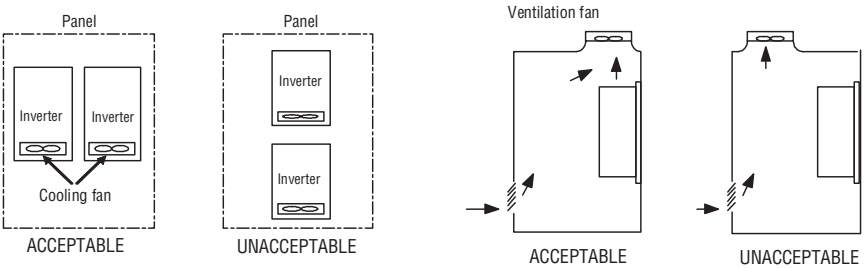

[When installing several inverters in a panel]

[When installing a ventilation fan in a panel]

Install the inverter using screws or bolts to insure the inverter is firmly fastened.

3.2 Watts Loss Data

Table 3-2 Watts Loss Data

Catalog No.	Normal Duty HP	Continuous Normal Duty Output Amps	Heavy Duty HP	Continuous Heavy Duty Output Amps	Watts Loss (Watts)
230VAC Input					
VS1PF27-1	7.5	24	5	17	222
VS1PF210-1	10	32	7.5	23	285
VS1PF215-1	15	46	10	33	425
VS1PF220-1	20	60	15	44	485
VS1PF225-9	25	74	20	54	552
VS1PF230-9	30	88	25	68	532
VS1PF240-9	40	115	30	84	680
460VAC Input					
VS1PF47-1	7.5	12	5	8	189
VS1PF410-1	10	16	7.5	11	263
VS1PF-415-1	15	24	10	17	326
VS1PF420-9	20	30	15	22	335
VS1PF425-9	25	39	20	28	423
VS1PF430-9	30	45	25	34	488
VS1PF440-9	40	61	30	44	680
VS1PF450-9	50	75	40	55	1188
VS1PF460-9	60	91	50	66	1214
VS1PF475-9	75	110	60	80	1762
VS1PF4100-9	100	152	75	111	2886
VS1PF4125-9L	125	183	100	134	2865
VS1PF4150-9L*	150	223	125	164	2834
VS1PF4200-9L*	200	264	150	194	3164
VS1PF4250-9L*	250	325	200	240	3834
VS1PF4300-9L*	300	413	250	317	4214
VS1PF4350-9L*	350	432	250	317	4214
VS1PF4400-9L*	400	547	300	401	5414
VS1PF4500-9	500	613	350	450	6108
VS1PF4600-9	600	731	400	536	7314
VS1PF4700-9	700	877	500	643	8814

* These models include a built-in DC link inductor.

Table 3-2 Watts Loss Data Continued

Catalog No.	Normal Duty HP	Continuous Normal Duty Output Amps	Heavy Duty HP	Continuous Heavy Duty Output Amps	Watts Loss (Watts)
600VAC Input					
VS1PF57-1	7.5	9	5	6.1	204**
VS1PF510-1	10	12	7.5	9	238**
VS1PF515-1	15	17	10	12	325**
VS1PF520-9	20	23	15	17	441**
VS1PF525-9	25	27	20	23	502**
VS1PF530-9	30	34	25	27	643**
VS1PF540-9	40	43	30	34	791**
VS1PF550-9	50	55	40	43	1038**
VS1PF560-9	60	64	50	55	1177**
VS1PF575-9	75	80	60	64	1438**
VS1PF5100-9	100	104	75	80	1903**
VS1PF5125-9	125	128	100	104	2251**
VS1PF5150-9L*	150	150	125	128	2724**

* These models include a built-in DC link inductor.
** Watts Loss data is an estimated value.

3.3 Mounting Dimensions for the VS1PF Drive by Frame

3.3.1 7.5 HP (230V/460V) and 7.5HP - 15 HP (600V) Frame A

Figure 3-5 7.5 HP (230V/460V) and 7.5HP - 15 HP (600V) Frame A

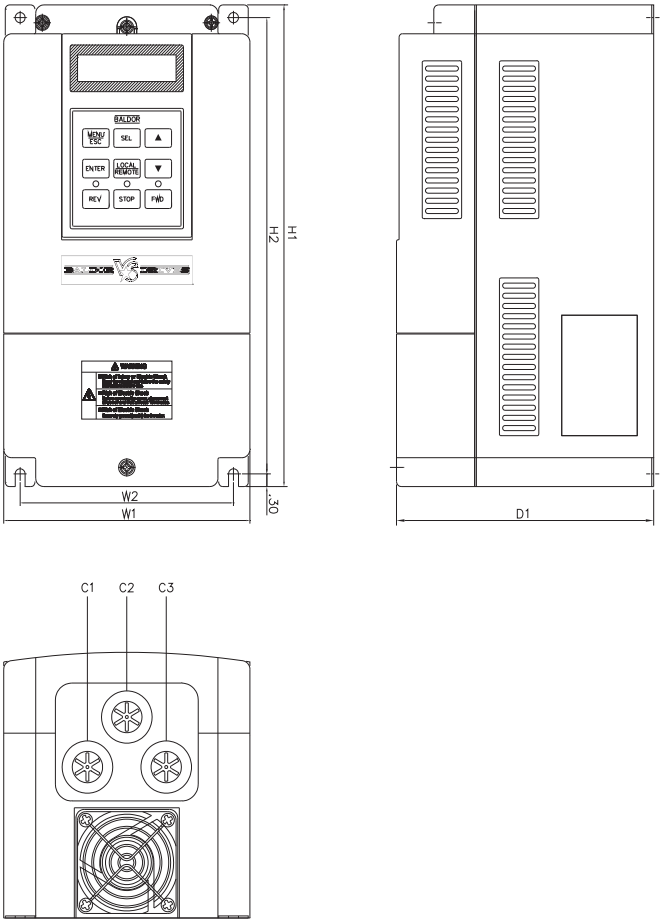

Table 3-3 7.5 HP (230V/460V) and 7.5HP - 15 HP (600V) Frame A Dimensions [inches (mm)]

Catalog No.	W1	W2	H1	H2	D1	C1	C2	C3	Enclosure Type
VS1PF27-1 VS1PF47-1	5.91 (150)	5.12 (130)	11.18 (284)	10.69 (269)	6.16 (156.6)	0.98 (24)	0.98 (24)	0.98 (24)	IP20 UL Type 1
VS1PF57-1 VS1PF510-1 VS1PF515-1	7.87 (200)	7.09 (180)	13.98 (355)	13.39 (340)	7.19 (182.5)	1.12 (28.5)	0.94 (24)	1.12 (28.5)	IP 20 UL Type 1

3.3.2 10 HP - 40 HP (230V/460V) and 20 HP - 40 HP (600V) Frames B, C and E

Figure 3-6 10 HP (230V/460V) Frames B, C and E

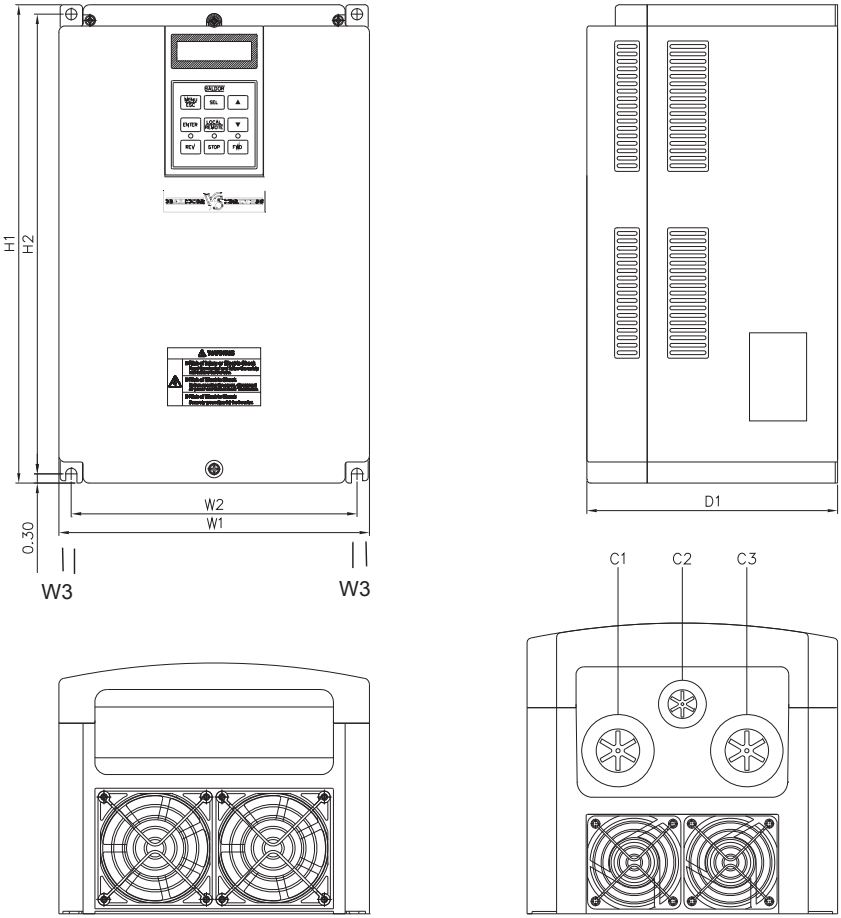

Table 3-4 10 HP - 40 HP (230V/460V) and 20 HP - 40 HP (600V) Frames B, C and E Dimensions [inches (mm)]

Catalog No.	W1	W2	W3	H1	H2	D1	C1	C2	C3	Enclosure Type
VS1PF210-1 VS1PF410-1	7.87 (200)	7.09 (180)	0.23 (6)	11.18 (284)	10.69 (269)	7.16 (182)	1.37 (35)	0.98 (24)	1.37 (35)	IP20 UL Type 1
VS1PF215-1 VS1PF415-1	7.87 (200)	7.09 (180)	0.23 (6)	11.18 (284)	10.69 (269)	7.16 (182)	1.37 (35)	0.98 (24)	1.37 (35)	IP20 UL Type 1
VS1PF220-9 VS1PF420-9 VS1PF520-9	9.84 (250)	9.06 (230)	0.35 (9)	15.16 (385)	14.57 (370)	7.91 (201)	-	-	-	IP00 UL Open
VS1PF225-9 VS1PF425-9 VS1PF525-9	9.84 (250)	9.06 (230)	0.35 (9)	15.16 (385)	14.57 (370)	7.91 (201)	-	-	-	IP00 UL Open
VS1PF230-9 VS1PF430-9 VS1PF530-9	11.97 (304)	11.18 (284)	0.35 (9)	18.11 (460)	17.52 (445)	9.21 (234)	-	-	-	IP00 UL Open
VS1PF240-9 VS1PF440-9 VS1PF540-9	11.97 (304)	11.18 (284)	0.35 (9)	18.11 (460)	17.52 (445)	9.21 (234)	-	-	-	IP00 UL Open

3.3.3 20 HP - 40 HP (230V/460V) Frames C and E with Conduit Option Used

Figure 3-7 20 - 40 HP (230V/460V) Frames C and E with Conduit Option Used

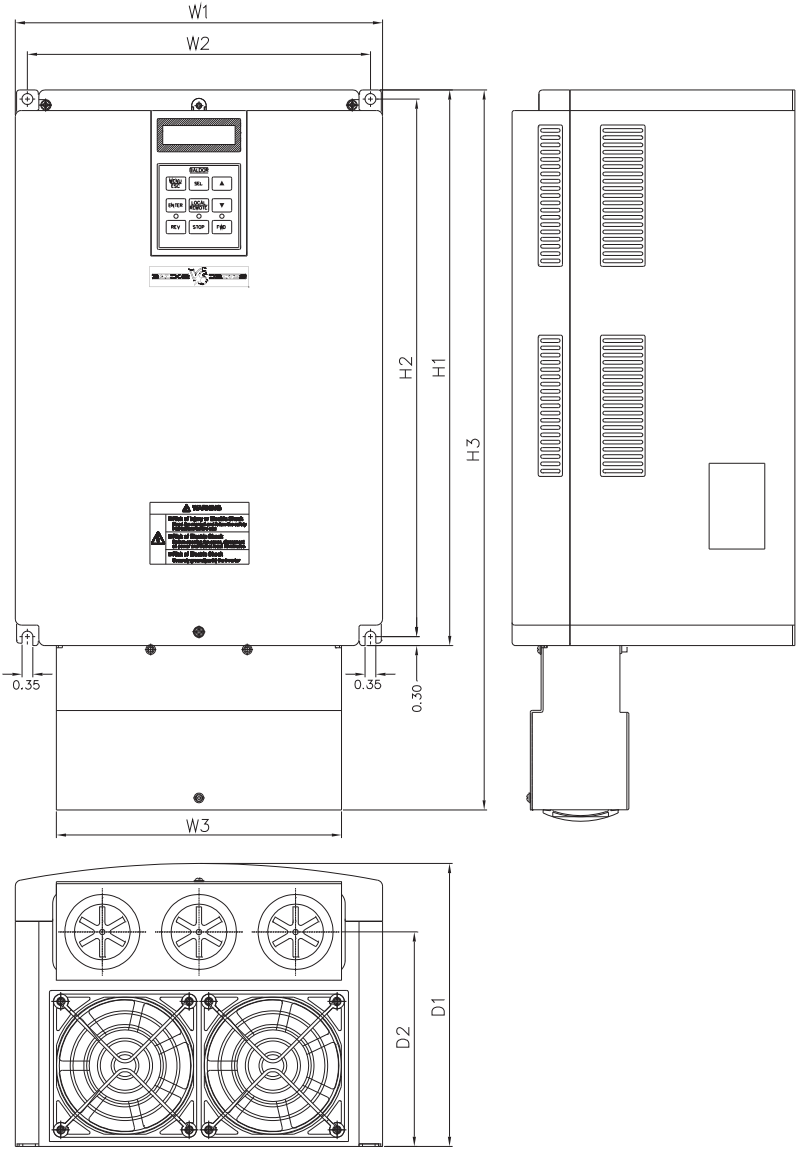

Table 3-5 20 HP - 40 HP (230V/460V) Frames C and E with Conduit Option Used Dimensions [inches (mm)]

Catalog No.	W1	W2	W3	H1	H2	H3	D1	D2	Enclosure Type
VS1PF220-9 VS1PF420-9	9.84 (250)	9.06 (230)	7.9 (200.8)	15.16 (385)	14.57 (370)	17.88 (454.2)	7.91 (201)	5.74 (146)	IP20 UL Type 1
VS1PF225-9 VS1PF425-9	9.84 (250)	9.06 (230)	7.9 (200.8)	15.16 (385)	14.57 (370)	17.88 (454.2)	7.91 (201)	5.74 (146)	IP20 UL Type 1
VS1PF230-9 VS1PF430-9	11.97 (304)	11.18 (284)	9.29 (236)	18.11 (460)	17.52 (445)	23.59 (599.2)	7.91 (201)	6.98 (177.5)	IP20 UL Type 1
VS1PF240-9 VS1PF440-9	11.97 (304)	11.18 (284)	9.29 (236)	18.11 (460)	17.52 (445)	23.59 (599.2)	7.91 (201)	6.98 (177.5)	IP20 UL Type 1

3.3.4 20HP - 40HP (460V) Frame D

Figure 3-8 20HP - 40HP (460V) Frame D

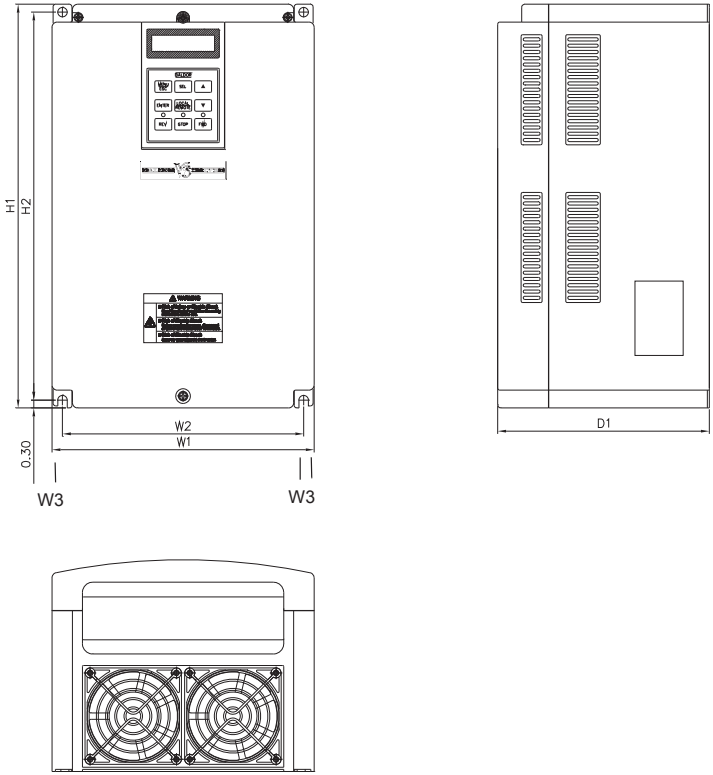

Table 3-6 20 - 40 HP (460V) Frame D [inches (mm)]

Catalog No.	W1	W2	W3	H1	H2	D1	Enclosure Type
VS1PF420-9L VS1PF425-9L	9.84 (250)	7.32 (186)	0.28 (7)	15.88 (403.5)	15.43 (392)	10.28 (261.2)	IP00 UL Open
VS1PF430-9L VS1PF440-9L	10.23 (260)	8.66 (220)	0.28 (7)	18.89 (480)	18.44 (468.5)	10.57 (268.6)	IP00 UL Open

3.3.5 50 HP - 75 HP (460V/600V) Frames G and H

Figure 3-9 50 HP - 75 HP (460V) Frames G and H

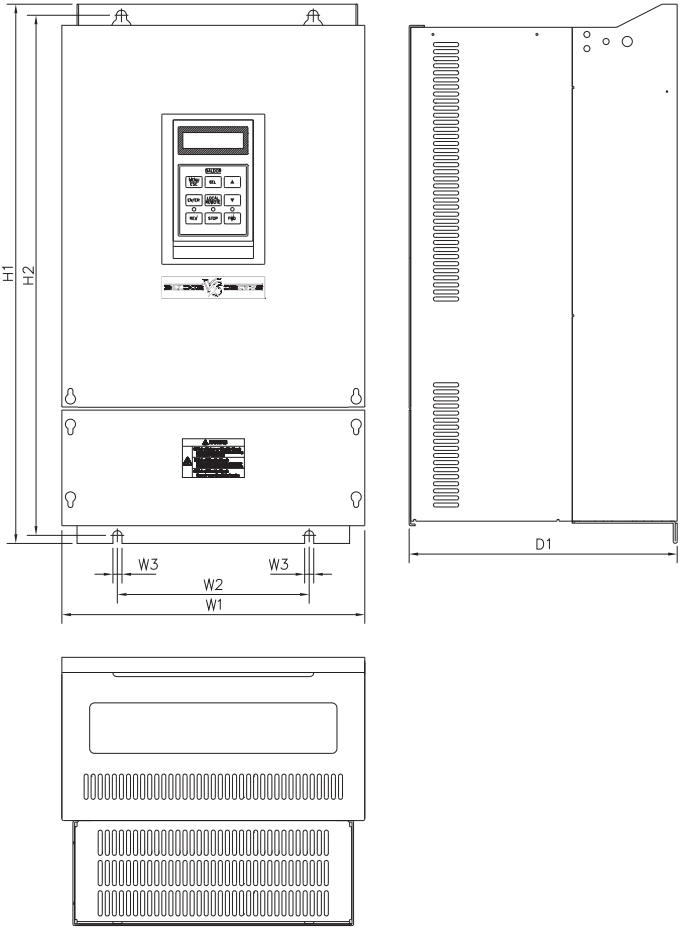

Table 3-7 50 HP - 75 HP (460V/600V) Frames G and H Dimensions [inches (mm)]

Catalog No.	W1	W2	W3	H1	H2	D1	Enclosure Type
VS1PF450-9 VS1PF460-9	11.81 (300)	7.48 (190)	0.35 (9)	21.02 (534)	20.28 (515)	10.46 (265.6)	IP00 UL Open
VS1PF550-9 VS1PF560-9 VS1PF475-9 VS1PF575-9	11.81 (300)	7.48 (190)	0.35 (9)	21.02 (534)	20.28 (515)	11.52 (292.6)	IP00 UL Open

3.3.6 50 HP - 75 HP (460V) Frames G and H UL Open Type with Conduit Option Used

Figure 3-10 50 - 75 HP (460V) Frames G and H UL Open Type with Conduit Option Used

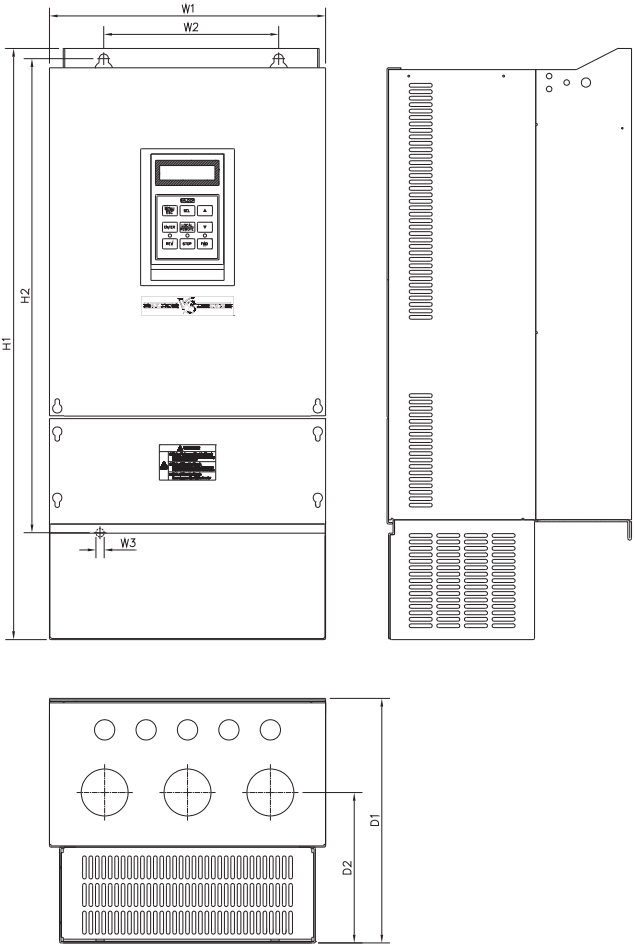

Table 3-8 50 - 75 HP (460V) Frames G and H UL Open Type with Conduit Option Used Dimensions [inches (mm)]

Catalog No.	W1	W2	W3	H1	H2	D1	D2	Enclosure Type
VS1PF450-9 VS1PF460-9	11.81 (300)	7.48 (190)	0.35 (9)	21.02 (534)	20.28 (515)	10.46 (265.6)	6.43 (163.4)	IP20 UL Type 1
VS1PF475-9	11.81 (300)	7.48 (190)	0.35 (9)	21.02 (534)	20.28 (515)	11.52 (292.6)	7.5 (190.4)	IP20 UL Type 1

3.3.7 100 HP - 125 HP (460V/600V) Frame L

Figure 3-11 100 HP - 125 HP (460V/600V) Frame L

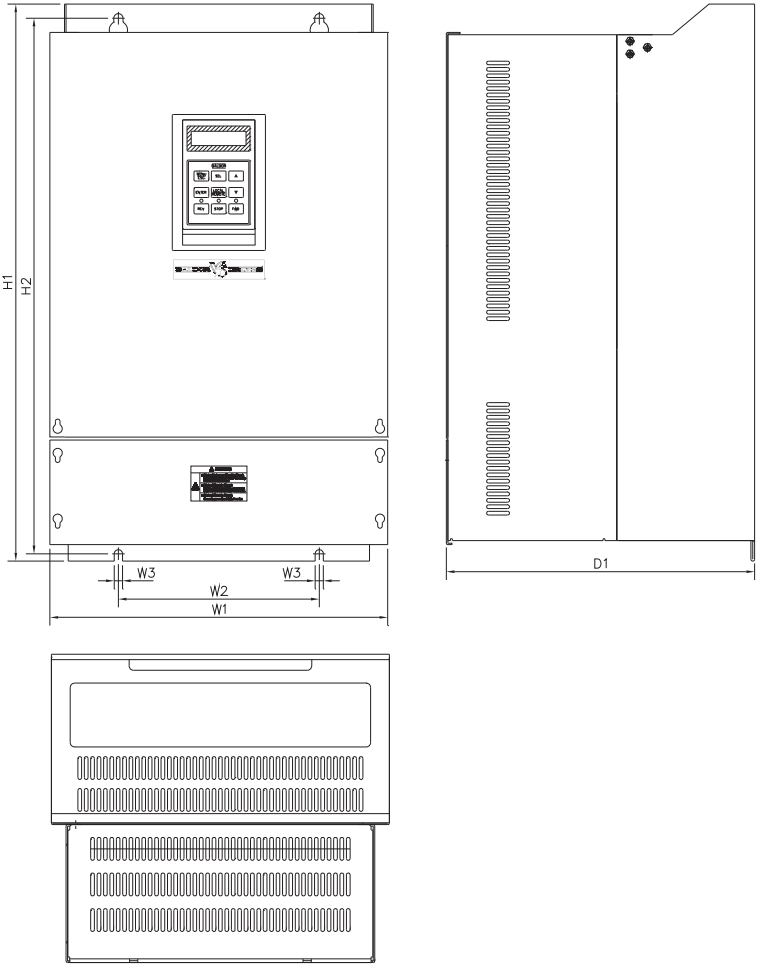

Table 3-9 100 HP - 125 HP (460V/600V) Frame L Dimensions [inches (mm)]

Catalog No.	W1	W2	W3	H1	H2	D1	Enclosure Type
VS1PF4100-9 VS1PF5100-9 VS1PF4125-9 VS1PF5125-9	14.57 (370)	8.66 (220)	0.35 (9)	24.02 (610)	23.09 (586.5)	13.29 (337.6)	IP00 UL Open

3.3.8 100 HP - 125 HP (460V) Frame L with Conduit Option Used

Figure 3-12 100 HP - 125 HP (460V) Frame L with Conduit Option Used

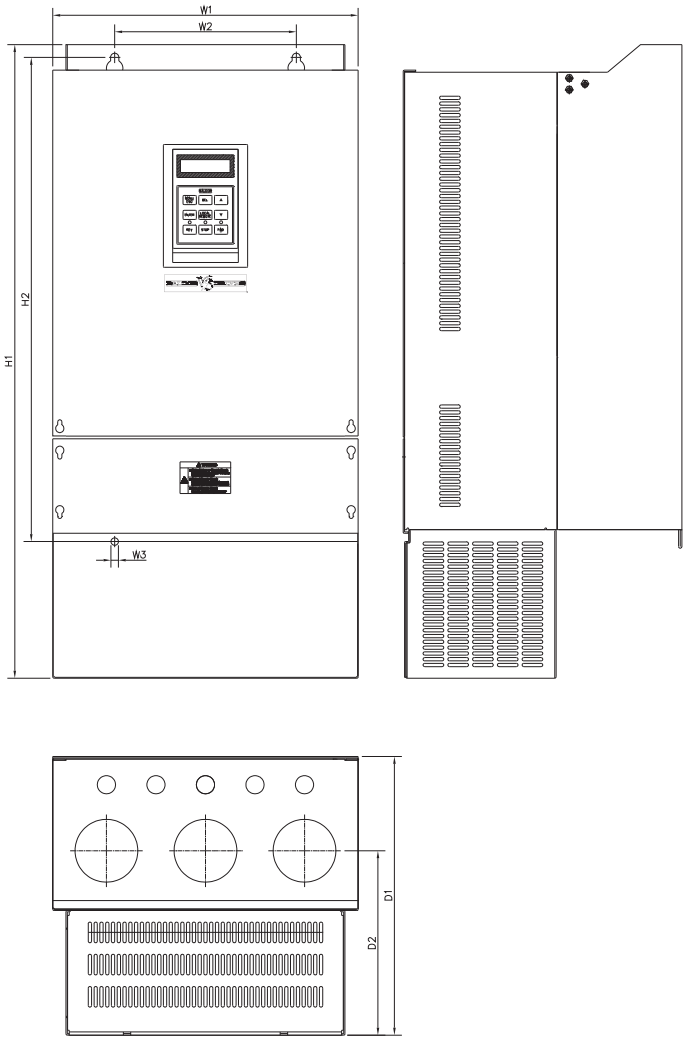

Table 3-10 100 HP - 125 HP (460V) Frame L with Conduit Option Used Dimensions [inches (mm)]

Catalog No.	W1	W2	W3	H1	H2	D1	D2	Enclosure Type
VS1PF4100-9	14.57	8.66	0.35	24.02	23.09	13.29	8.8	IP20
VS1PF4125-9	(370)	(220)	(9)	(610)	(586.5)	(337.6)	(223.4)	UL Type 1

3.3.9 150 HP - 250 HP (460V) and 150 HP (600V) Frames N and P

Figure 3-13 150 HP - 250 HP (460V) and 150 HP (600V) Frames N and P

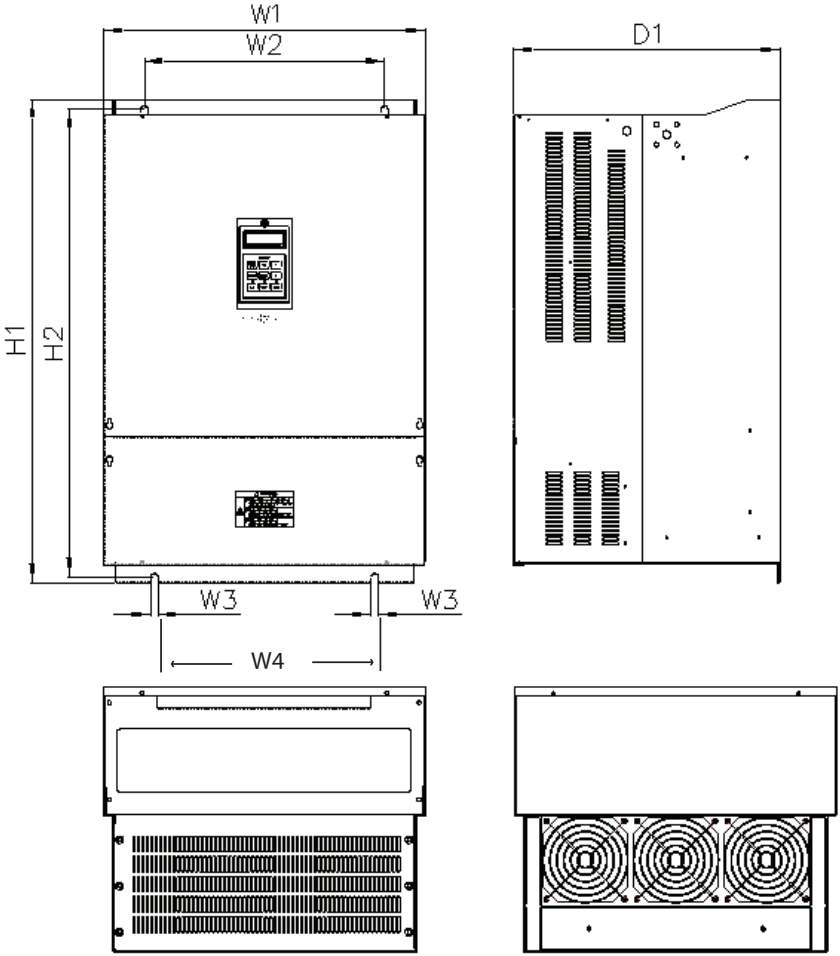

Table 3-11 150 HP - 250 HP (460V) Frames N and P Dimensions [inches (mm)]

Catalog No.	W1	W2	W3	W4	H1	H2	D1	Enclosure Type
VS1PF4150-9L VS1PF5150-9L VS1PF4200-9L	20.08 (510)	15.00 (381)	0.43 (11)	13.78 (350)	30.85 (783.5)	29.88 (759)	16.64 (422.6)	IP00 UL Open
VS1PF4250-9L	20.08 (510)	15.00 (381)	0.43 (11)	13.78 (350)	33.90 (861)	32.93 (836.5)	16.64 (422.6)	IP00 UL Open

3.3.10 300 HP - 400 HP (460V) Frame R

Figure 3-14 300 HP - 400 HP (460V) Frame R

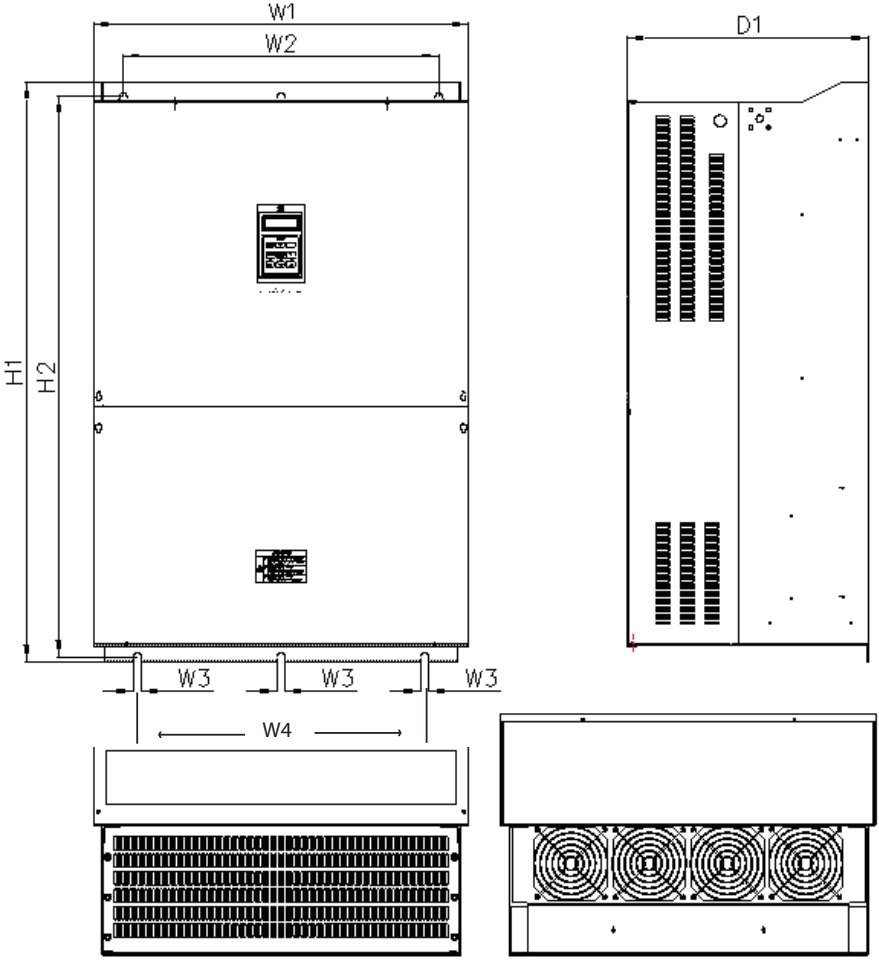

Table 3-12 300 HP - 400 HP (460V) Frame R Dimensions [inches (mm)]

Catalog No.	W1	W2	W3	W4	H1	H2	D1	Enclosure Type
VS1PF4300-9L VS1PF4350-9L VS1PF4400-9L	27.17 (690)	22.87 (581)	0.55 (14)	20.79 (528)	42.44 (1078)	41.08 (1045)	17.70 (449.6)	IP00 UL Open

3.3.11 500 HP - 700 HP (460V) Frames S and T

Figure 3-15 500 HP - 700 HP (460V) Frames S and T

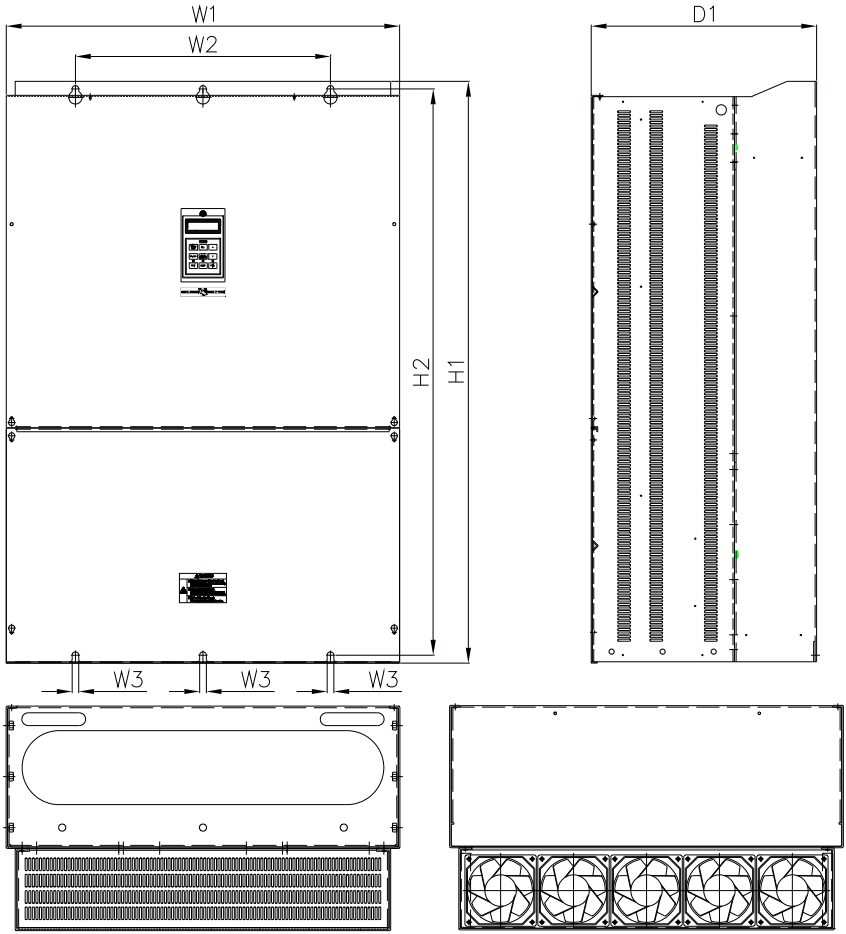

Table 3-13 500 HP - 700 HP (460V) Frames S and T Dimensions [inches (mm)]

Catalog No.	W1	W2	W3	H1	H2	D1	Enclosure Type
VS1PF4500-9	30.39 (772)	19.69 (500)	0.51 (13)	44.90 (1140.5)	43.70 (1110)	17.40 (442)	IP00 UL Open
VS1PF4600-9 VS1PF4700-9	36.30 (922)	22.83 (580)	0.55 (14)	51.28 (1302.5)	50.06 (1271.5)	19.49 (495)	IP00 UL Open

3.4 Mounting Dimensions by Catalog Number

Table 3-14 Mounting Dimensions [inches (mm)] and Weight [lb & kg]

Catalog No.	Dimensions in (mm)					Weight	
	H1	H2	W1	W2	D1	lb	kg
VS1PF27-1	11.18 (284)	10.69 (269)	5.91 (150)	5.12 (130)	6.16 (156)	10.8	4.9
VS1PF57-1	13.98 (355)	13.39 (340)	7.87 (200)	7.09 (180)	7.19 (182.5)	14.3	6.5
VS1PF210-1	11.18 (284)	10.69 (269)	7.87 (200)	7.09 (180)	7.16 (182)	13.2	6.0
VS1PF215-1	11.18 (284)	10.69 (269)	7.87 (200)	7.09 (180)	7.16 (182)	13.2	6.0
VS1PF220-9	15.16 (385)	14.57 (370)	9.84 (250)	9.06 (230)	7.91 (201)	28.7	13.0
VS1PF225-9	15.16 (385)	14.57 (370)	9.84 (250)	9.06 (230)	7.91 (201)	28.7	13.0
VS1PF230-9	18.11 (460)	17.52 (445)	11.97 (304)	11.18 (284)	9.21 (234)	44.1	20.0
VS1PF240-9	18.11 (460)	17.52 (445)	11.97 (304)	11.18 (284)	9.21 (234)	44.1	20.0
VS1PF47-1	11.18 (284)	10.69 (269)	5.91 (150)	5.12 (130)	6.16 (156)	10.8	4.9
VS1PF410-1	11.18 (284)	10.69 (269)	7.87 (200)	7.09 (180)	7.16 (182)	13.2	6.0
VS1PF415-1	11.18 (284)	10.69 (269)	7.87 (200)	7.09 (180)	7.169 (182)	13.2	6.0
VS1PF420-9	15.16 (385)	14.57 (370)	9.84 (250)	9.06 (230)	7.91 (201)	27.6	12.5
VS1PF420-9L	15.88 (403.5)	15.43 (392)	9.84 (250)	7.32 (186)	10.28 (261.2)	42.9	19.5
VS1PF425-9	15.16 (385)	14.57 (370)	9.84 (250)	9.06 (230)	7.91 (201)	27.6	12.5
VS1PF425-9L	15.88 (403.5)	15.43 (392)	9.84 (250)	7.32 (186)	10.28 (261.2)	42.9	19.5
VS1PF430-9	18.11 (460)	17.52 (445)	11.97 (304)	11.18 (284)	9.21 (234)	44.1	20.0
VS1PF430-9L	18.89 (480)	18.44 (468.5)	10.23 (260)	8.66 (220)	10.57 (268.6)	58.3	26.5
VS1PF440-9	18.11 (460)	17.52 (445)	11.97 (304)	11.18 (284)	9.21 (234)	44.1	20.0
VS1PF440-9L	18.89 (480)	18.44 (468.5)	10.23 (260)	8.66 (220)	10.57 (268.6)	58.3	26.5
VS1PF450-9	21.02 (534)	20.28 (515)	11.81 (300)	7.48 (190)	10.46 (266)	59.5	27.0

Table 3-13 Mounting Dimensions [inches (mm)] and Weight [lb & kg] Continued

Catalog No.	Dimensions in (mm)					Weight	
	H1	H2	W1	W2	D1	lb	kg
VS1PF450-9L	26.92 (684)	26.18 (665)	11.81 (300)	7.48 (190)	10.46 (265.6)	86	39
VS1PF460-9	21.02 (534)	20.28 (515)	11.81 (300)	7.48 (190)	10.46 (265.6)	59.5	27.0
VS1PF460-9L	26.92 (684)	26.18 (665)	11.81 (300)	7.48 (190)	10.46 (265.6)	88.2	40
VS1PF475-9	21.02 (534)	20.28 (515)	11.81 (300)	7.48 (190)	11.52 (292.6)	64.0	29.1
VS1PF475-9L	26.92 (684)	26.18 (665)	11.81 (300)	7.48 (190)	11.52 (292.6)	92.6	42
VS1PF510-1	13.98 (355)	13.39 (340)	7.87 (200)	7.09 (180)	7.19 (182.5)	15.4	7
VS1PF515-1						15.4	7
VS1PF520-9	15.16 (385)	14.57 (370)	9.84 (250)	9.06 (230)	7.91 (201)	25.8	11.7
VS1PF525-9						25.8	11.7
VS1PF530-9	18.11 (460)	17.52 (445)	11.97 (304)	11.18 (284)	9.21 (234)	41.7	18.9
VS1PF540-9						41.7	18.9
VS1PF550-9	21.02 (534)	20.28 (515)	11.81 (300)	7.48 (190)	11.52 (292.6)	70.5	32
VS1PF560-9						70.5	32
VS1PF575-9						70.5	32
VS1PF4100-9	24.02 (610)	23.09 (586.5)	14.57 (370)	8.66 (220)	13.29 (337.6)	92.6	42.1
VS1PF4100-9L	29.92 (760)	28.99 (736.6)	14.57 (370)	8.66 (220)	13.29 (337.6)	147.4	67
VS1PF4125-9	24.02 (610)	23.09 (586.5)	14.57 (370)	8.66 (220)	13.29 (337.6)	92.6	42.1
VS1PF4125-9L	29.92 (760)	28.99 (736.6)	14.57 (370)	8.66 (220)	13.29 (337.6)	149.9	68
VS1PF4150-9L	30.26 (768.5)	29.29 (744)	20.08 (510)	15.00 (381)	16.64 (423)	222.7	101.2
VS1PF4200-9L	30.26 (768.5)	29.29 (744)	20.08 (510)	15.00 (381)	16.64 (423)	222.7	101.2
VS1PF4250-9L	30.26 (768.5)	29.29 (744)	20.08 (510)	15.00 (381)	16.64 (423)	251.3	114.2
VS1PF4300-9L	41.85 (1063)	40.49 (1028)	27.17 (690)	22.87 (581)	17.70 (450)	441.9	200.9
VS1PF4350-9L	41.85 (1063)	40.49 (1028)	27.17 (690)	22.87 (581)	17.70 (450)	441.9	200.9
VS1PF4400-9L	41.85 (1063)	40.49 (1028)	27.17 (690)	22.87 (581)	17.70 (450)	441.9	200.9

Table 3-13 Mounting Dimensions [inches (mm)] and Weight [lb & kg] Continued

Catalog No.	Dimensions in (mm)					Weight	
	H1	H2	W1	W2	D1	lb	kg
VS1PF4500-9	44.90 (1140.5)	43.70 (1110)	30.39 (772)	19.69 (500)	17.70 (442)	535.7	243.5
VS1PF4600-9	51.28 (1302.5)	50.06 (1271.5)	36.30 (922)	22.83 (580)	19.49 (495)	837.7	380.8
VS1PF4700-9	51.28 (1302.5)	50.06 (1271.5)	36.30 (922)	22.83 (580)	19.49 (495)	837.7	380.8
VS1PF5100-9	24.02 (610)	23.09 (586.5)	14.57 (370)	8.66 (220)	13.29 (337.6)	101.4	46
VS1PF5125-9						101.4	46
VS1PF5150-9L	30.26 (768.5)	29.29 (744)	20.08 (510)	15.00 (381)	16.64 (422.6)	222.7	101

Chapter 4

Power Wiring

4.1 Grounding the Drive

WARNING: **This manual is intended as a guide for proper installation. Baldor Electric Company cannot assume responsibility for the compliance or the noncompliance to any code, national, local or otherwise, for the proper installation of this drive or associated equipment. A hazard of personal injury and/or equipment exists if codes are ignored during installation.**

WARNING: **This drive contains high voltage capacitors that take time to discharge after removal of main supply. Before working on the drive, ensure isolation of main supply from line inputs. Wait ten (10) minutes for capacitors to discharge to safe voltage levels. Failure to observe this precaution could result in severe bodily injury or loss of life.**

WARNING: **Only qualified electrical personnel familiar with the construction and operation of this equipment and the hazards involved should install, adjust, operate, or service this equipment. Read and understand this manual and other applicable manuals in their entirety before proceeding. Failure to observe this precaution could result in severe bodily injury or loss of life.**

WARNING: **DC Bus capacitors retain hazardous voltages after input power has been disconnected. After disconnecting input power, wait ten (10) minutes for the DC Bus capacitors to discharge and then check the voltage with a voltmeter to ensure the DC bus capacitors are discharged before touching any internal components. Failure to observe this precaution could result in severe bodily injury or loss of life.**

NOTE: Use the dedicated ground terminal to ground the drive. Do not use mounting screws/bolts or chassis screws for grounding.

The drive Safety Ground - ⏚ must be connected to system ground. Ground impedance must conform to the requirements of national and local industrial safety regulations and/or electrical codes. The integrity of all ground connections should be checked periodically.

Figure 4-1 Typical Grounding

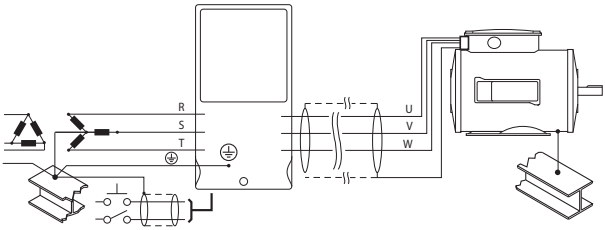

Ground Fault Monitoring
If a system ground fault monitor is to be used, only Type B devices should be used to avoid nuisance tripping. Type B is a standard IEC 60755 designation for a Residual Current Device suitable for use on power systems with phase shift or harmonic distortion.

Safety Ground - ⏚
This is the safety ground for the drive that is required by code. One of these points must be connected to adjacent building steel (girder, joist), a floor ground rod, or bus bar. Grounding points must comply with national and local industrial safety regulations and/or electrical codes.

Motor Ground
The motor ground must be connected to one of the ground terminals on the drive.

Shield Termination - SHLD
The safety ground terminal provides a grounding point for the motor cable shield.
The motor cable shield connected to this terminal (drive end) should also be connected to the motor frame (motor end). Use a shield terminating or ferrite type snap on EMI noise suppressing filter to connect the shield to the safety ground terminal.

When shielded cable is used for control and signal wiring, the shield should be grounded at the source end only, not at the drive end.

4.1.1 RFI Filter Grounding

Using drives with RFI filters may result in relatively high ground leakage currents. Therefore, a filter must only be used in installations with grounded AC supply systems and be permanently installed and solidly grounded (bonded) to the building power distribution ground.

Ensure that the incoming supply neutral is solidly connected (bonded) to the same building power distribution ground. Grounding must not rely on flexible cables and should not include any form of plug or socket that would permit inadvertent disconnection. Some local codes may require redundant ground connections. The integrity of all connections should be checked periodically.

4.1.2 Grounding Guidelines

- The VS1PF uses high-frequency switching on its output making it possible for leakage current to flow. Ground the inverter to avoid electrical shock. Use caution to prevent the possibility of personal injury. Maximum ground impedance is 100 ohms for 230V class drives and 10 ohms for 460V class drives.

- Drive ground connections must be made to the dedicated ground terminal on the power terminal block. Do not make ground connections to mounting screws/bolts or to the chassis screws.

- When making/removing connection to/from the drive, the ground conductor must be the first one connected and the last one removed.

- At a minimum, the ground wire should meet the specifications listed below. The ground wire should be as short as possible and should be connected to ground as near as possible to the inverter.

Table 4-1 Minimum Ground Wire Size

Inverter Capacity		Minimum Ground Wire Size, AWG or kcmil (mm2)		
HP	KW	230V Class	460V Class	600V Class
7.5 to 10	5.5 to 7.5	10 (5.5)	12 (3.5)	14(2.5)
15 to 20	11 to 15	6 (14)	8 (8)	12(3.5)
25 to 40	18.5 to 30	4 (22)	6 (14)	8(8)
50 to 75	37 to 55	-	4 (22)	6(14)
100 to 125	75 to 90	-	2 (38)	4(22)
150	110	-	1/0 (60)	2(38)
200	132	-	1/0 (60)	-
250 to 350	160 to 280	-	4/0 (100)	-
400 to 600	315 to 375	-	300 (150)	-
700	450	-	400 (200)	-

4.2 Connecting Peripheral Devices to the VS1PF Drive

The following devices are required to operate the inverter. Proper peripheral devices must be selected and correct connections made to ensure proper operation. An incorrectly applied or installed inverter can result in system malfunction or reduction in product life as well as component damage. You must read and understand this manual thoroughly before proceeding.

Table 4-2 Peripheral Devices for the VS1PF Drive

	AC Source Supply	Use a power source with a voltage within the permissible range of inverter input power rating.
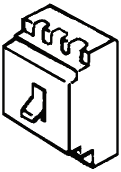	Input Circuit Breaker or Fused Disconnect	Select circuit breakers or fuses in accordance with applicable national and local codes.
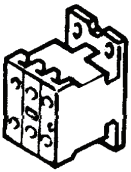	Inline Magnetic Contactor	Install if necessary. When installed, do not use it for the purpose of starting or stopping the drive.
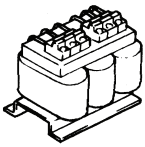	AC Reactor	An AC reactor can be used to reduce the harmonics and is required when the VS1PF is installed on a power source that is rated greater than 10 times the KVA rating of the drive.
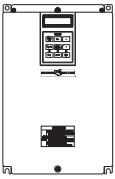	Installation and Wiring	To provide reliable operation, install the inverter in the proper orientation and with proper clearances. Incorrect terminal wiring could result in equipment damage.
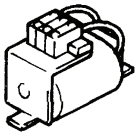	DC Inductor	A DC inductor may be used together with or in place of an AC reactor if necessary to reduce harmonics.
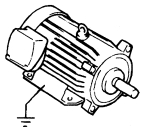	To Motor	Do not connect power factor capacitors, surge arrestors or radio frequency filters to the output side of the inverter.

4.3 Power Wiring

4.3.1 Wiring Precautions

CAUTION: **Use of power correction capacitors on the output of the drive can result in erratic operation of the motor, nuisance tripping, and/or permanent damage to the drive. Remove power correction capacitors before proceeding. Failure to observe the precaution could result in damage to, or destruction of, the equipment.**

- The internal circuits of the inverter will be damaged if the incoming power is connected and applied to output terminals (U, V, W).
- Use ring terminals with insulated barrels when wiring the input power and motor wiring.
- Do not leave wire fragments inside the inverter as they can cause faults, breakdowns, and malfunctions.
- For input and output, use wires with sufficient size to ensure voltage drop of less than 2%.
- Motor torque may decrease when operating at low frequencies and there is a long distance from the drive to the motor. For applications requiring operation at low frequencies, ensure that the motor is close to the drive or that the wire gauge is large enough to prohibit excessive voltage drop.
- The main circuit of the inverter contains high frequency noise, and can hinder communication equipment near the inverter. To reduce noise, install line noise filters on the input side of the inverter.
- Always ensure the LCD display and the DC bus voltage indicator LED are OFF before working on the drive or connected equipment. The DC bus capacitors may hold high-voltage even after the power is disconnected. Use caution to prevent the possibility of personal injury.
- A contactor or other device that routinely disconnects and reapplies the AC line to the drive to start and stop the motor can cause drive hardware damage. The drive is designed to use control input signals that will start and stop the motor. If used, the input device must not exceed one operation per minute or drive damage can occur. Failure to observe this precaution can result in damage to, or destruction of the equipment.
- If an M-Contactor is installed, the control must be disabled for at least 200mSec before the M-Contactor is opened. If the M-Contactor is opened while the control is supplying voltage and the current to the motor, the control may be damaged. Before the control is enabled, the M-Contactor must be closed for at least 200mSec.

4.4 Power Disconnect

A power disconnect should be installed between the input power service and the drive for a fail safe method to disconnect power. The drive will remain in a powered-up condition until all input power is removed from the drive and the internal bus voltage is depleted.

4.5 Protective Devices

Recommended fuse sizes are based on the following:

115% of maximum continuous current for time delay
150% of maximum continuous current for Fast or Very Fast action

Note: These recommendations do not consider harmonic currents or ambient temperature greater than 45°C. Be sure a suitable input power protection device is installed. Use the recommended fuses and wire sizes shown in Table 4-1 (based on the use of copper conductor wire rated at 75°C and specified for NEMA B motors).

Fast Action Fuses:	240VAC, Buss®KTN; 460VAC, Buss®KTS
Very Fast Action:	240VAC, Buss®JJN; 460VAC, Buss®JJS
Semiconductor:	240VAC, Ferraz Shawmut A50QS

Buss® is a trademark of Cooper Industries, Inc.

4.6 Electrical Installation

All interconnection wires between between the drive, AC power source, motor, host control and any operator interface stations should be in metal conduits or shielded cable must be used. Use listed closed loop connectors that are of appropriate size for wire gauge being used. Connectors are to be installed using crimp tool specified by the manufacturer of the connector. Only class 1 wiring should be used.

4.6.1 Input Power Connections

All cables must be shielded and the shields must be grounded at the enclosure cable entrance.

1. Connect the three phase input power wires to an appropriate interrupter and protection.
2. Connect the three phase AC input power leads to terminate R, S and T of the power input terminal board (See Figure 4-2).

Table 4-3 Fuse & Wire Size and Terminal Torque Tightening Specifications

Inverter Rating		External Fuse Ratings		Tightening Torque		Wire Size			
						R(L1),S(L2), T(L3), G		U, V, W	
Volts	HP	Current	Voltage	lb-in	N-m	AWG or kcmil	mm2	AWG or kcmil	mm2
230V	7.5	40	250	6.2 to 10.6	0.70 to 1.20	10	5.5	10	5.5
	10	60		21.2 to 27.6	2.40 to 3.12	8	8	8	8
	15	80				6	14	6	14
	20	100		26.6 to 33.2	3.00 to 3.75	4	22	4	22
	25	125				2	38	2	38
	30	150		53.1 to 79.7	6.00 to 9.01	2	38	2	38
	40	200				1/0	60	1/0	60

Table 4-3 Fuse & Wire Size and Terminal Torque Tightening Specifications Continued									
Inverter Rating		External Fuse Ratings		Tightening Torque		Wire Size			
						R(L1),S(L2), T(L3), G		U, V, W	
Volts	HP	Current	Voltage	lb-in	N-m	AWG or kcmil	mm2	AWG or kcmil	mm2
460V	7.5	20	600	6.2 to 10.6	0.70 to 1.20	12	3.5	12	3.5
	10	30				12	3.5	12	3.5
	15	40				10	5.5	10	5.5
	20	60		26.6 to 33.2	3.00 to 3.75	8	8	8	8
	25	70				6	14	6	14
	30	80		53.1 to 79.7	6.00 to 9.01	4	22	4	22
	40	100				4	22	4	22
	50	125		58.4 to 75.9	6.60 to 8.58	2	38	2	38
	60	150				2	38	2	38
	75	175				2	38	2	38
	100	250		77.9 to 105.9	8.80 to 11.97	1/0	60	1/0	60
	125	250				1/0	60	1/0	60
	150	350		158.3 to 186.6	17.89 to 21.09	4/0	100	4/0	100
	200	400				4/0	100	4/0	100
	250	450				300	150	300	150
	300	700				400	200	400	200
	350	700				400	200	400	200
	400	800				500	250	500	250
	500	900				700	325	700	325
	600	1000				2×400	2×200	2×400	2×200
	700	1200				2 x 500	2×250	2×500	2×250

Table 4-3 Fuse & Wire Size and Terminal Torque Tightening Specifications Continued									
Inverter Rating		External Fuse Ratings		Tightening Torque		Wire Size			
						R(L1),S(L2), T(L3), G		U, V, W	
Volts	HP	Current	Voltage	lb-in	N-m	AWG or kcmil	mm2	AWG or kcmil	mm2
600V	7.5	16	660	6.2 to 10.6	0.70 to 1.20	12	3.5	12	3.5
	10	20							
	15	32							
	20	40		26.6 to 33.2	3.00 to 3.75	10	5.5	10	5.5
	25	50				8	8	8	8
	30	63		53.1 to 79.7	6.00 to 9.01	5	14	5	14
	40	80							
	50	100		58.4 to 79.7	6.60 to 9.01	4	22	4	22
	60	125							
	75	160				2	38	2	38
	100	200		77.9 to 105.9	8.80 to 11.97	2	38	2	38
	125	250				1/0	60	1/0	60
	150	315		158.3 to 186.6	17.89 to 21.09	1/0	60	1/0	60

Note: Wire sizes based on 75°C copper wire.
Fuses based on 45°C ambient, max continuous output and no harmonic current.

Figure 4-2 Terminal Locations

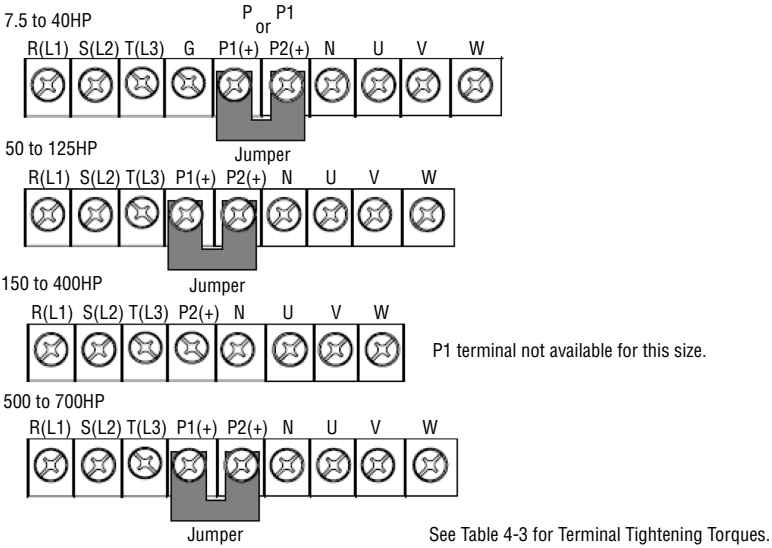

4.6.2 Motor Connections

All cables must be shielded and the shields must be grounded at the enclosure cable entrance.

1. Remove covers. Cover removal is described in Chapter 3 of this manual.
2. Connect the motor leads to terminal U, V, and W (see Figure 4-2 for location).

4.6.3 Long Motor Leads

The wire leads that connect the motor to the control are critical in terms of sizing, shielding and the cable characteristics. Short cable runs are usually trouble free but fault-monitoring circuitry can produce numerous faults when long cables (over 100 feet) are used. For 100 to 300ft, reactor is recommended if motor does not have Inverter Spike Resistant wire or has an insulation system suitable for pulse width modulated current from a VFD. Over 300 ft, Baldor recommends adding an optional load reactor to the output of the control. For reactors, refer to Appendix D of this manual.

The load reactor and/or common mode choke should be placed in close physical proximity to the control. Unexpected faults may occur due to excessive charging current required for motor cable capacitance.

If you use long motor leads and experience trips due to current overload conditions and are not sure how to correctly size and connect the optional lead reactors, please contact your Baldor representative. Baldor is always glad to assist.

4.7 Power Terminals

Table 4-4 Power Terminals

Symbol	Description
R(L1), S(L2), T(L3)	AC Line Voltage Input
G	Earth Ground
P1(+), P2(+)	External DC Link Inductor (P1(+)-P2(+)) Connection Terminals (Jumper must be removed).
P2(+) ,N(-) or P(+), N(-)	DB Unit (P2(+)-N(-)) Connection Terminals
U, V, W	3 Phase Power Output Terminals to Motor

Note: For single phase power input, make connections to R(L1) and S(L2). Derate drive by 50%.

4.7.1 Power and Motor Connection Example (7.5 HP - 40 HP inverters)

Figure 4-3 Power and Motor Connection Example (7.5 HP - 40 HP inverters)

R(L1)	S(L2)	T(L3)	G	P1(+)	P2(+)	N(-)	U	V	W

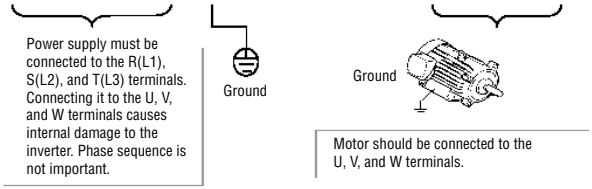

4.7.2 Powerup Procedure

1. Remove all power from the drive.
2. Disconnect the motor from the load (including coupling and/or inertia wheels).
3. Turn power on. Be sure there are no faults.
4. Set the following parameters for the values displayed on the motor nameplate:
   BAS01 Motor HP
   BAS02 Motor Voltage
   BAS03 Motor Base Frequency
   BAS04 Motor Current
   BAS05 Motor RPM
5. Verify the following parameter values are set:
   BAS08 Start Stop Source = Keypad
   BAS09 Speed Reference Source = Keypad

WARNING: **The motor shaft will rotate during this procedure. Be certain that unexpected motor shaft movement will not cause injury to personnel or damage to equipment.**

6. Press FWD key and the motor shaft should rotate.
7. Press STOP key and the motor shaft should stop.
8. Press REV key and the motor shaft should rotate.
9. Press STOP key and the motor shaft should stop.
10. Remove all power from the drive.
11. Couple the motor to its load.
12. Verify freedom of motion of motor shaft.
13. Verify the motor coupling is tight without backlash.

4.8 Connection Diagrams

4.8.1 Connection Diagram for 7.5 HP - 40 HP Drives

Figure 4-4 Connection Diagram for 7.5 HP - 40 HP Drives

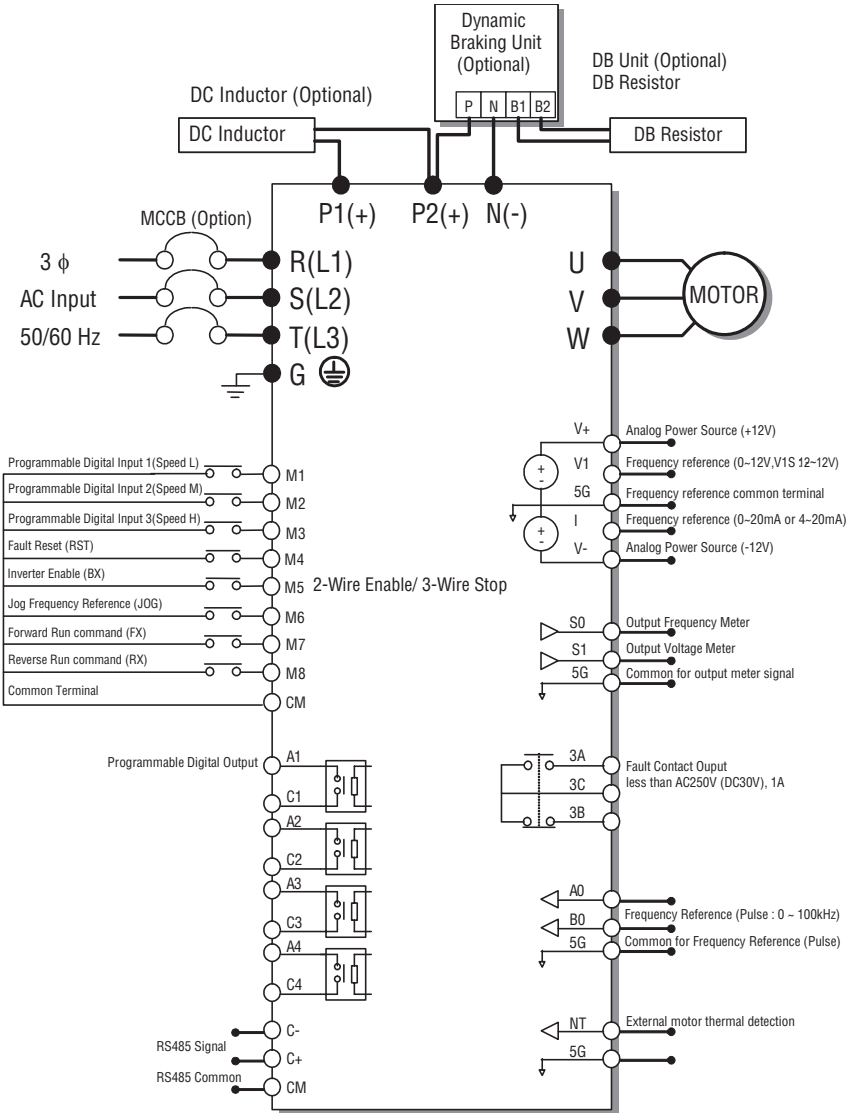

Note: 5G is Common Ground for Analog Input/Output.
Note: Use Terminal V1 for V1, V1S (0 to 12V, -12 to 12V) input.

4.8.2 Connection Diagram for 50 HP - 125 HP and 500 HP - 700 HP Drives

Figure 4-5 Connection Diagram for 50 HP - 125 HP and 500 HP - 700 HP Drives

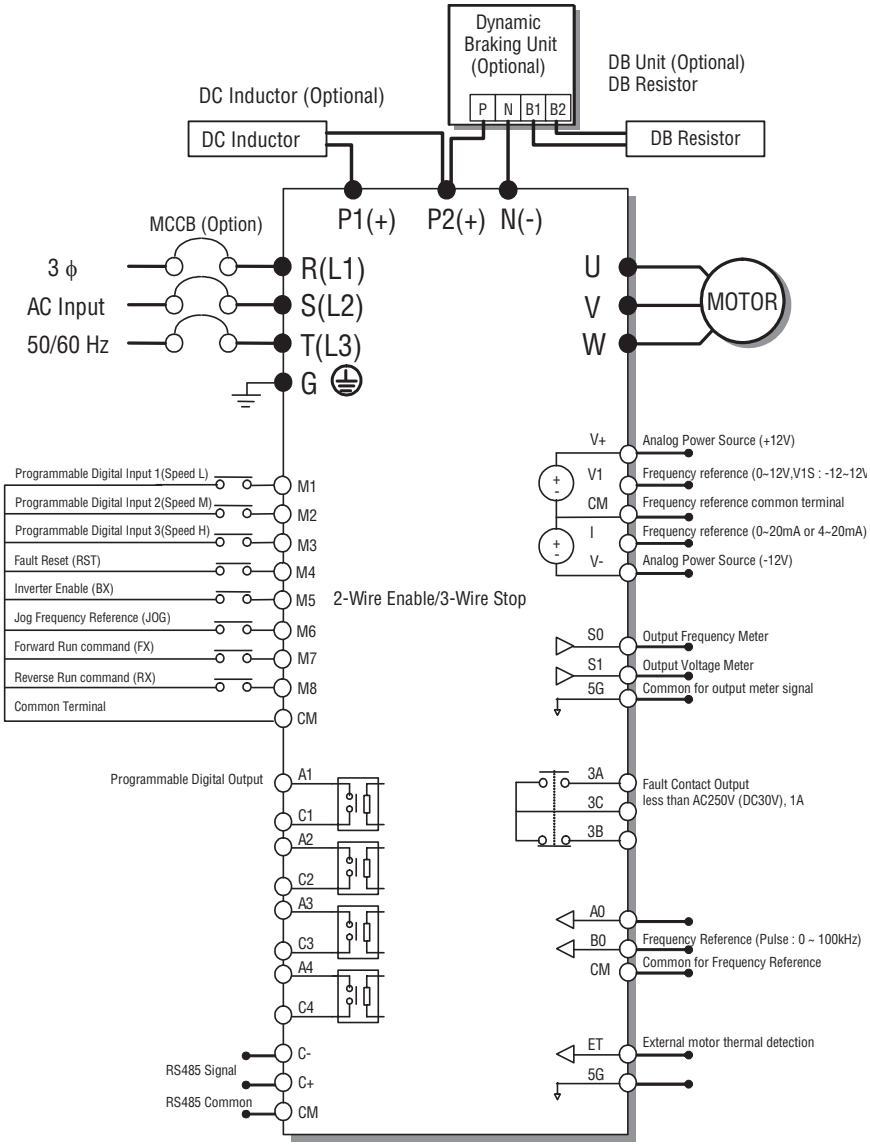

Note: 5G is Common Ground for Analog Meter Output (SO, S1) and external Motor Thermal Detection (ET).

Note: Use Terminal V1 for V1, V1S (0 to 12V, -12 to 12V) input.

4.8.3 Connection Diagram for 150 HP - 400 HP Drives

Figure 4-6 Connection Diagram for 150 HP - 400 HP Drives

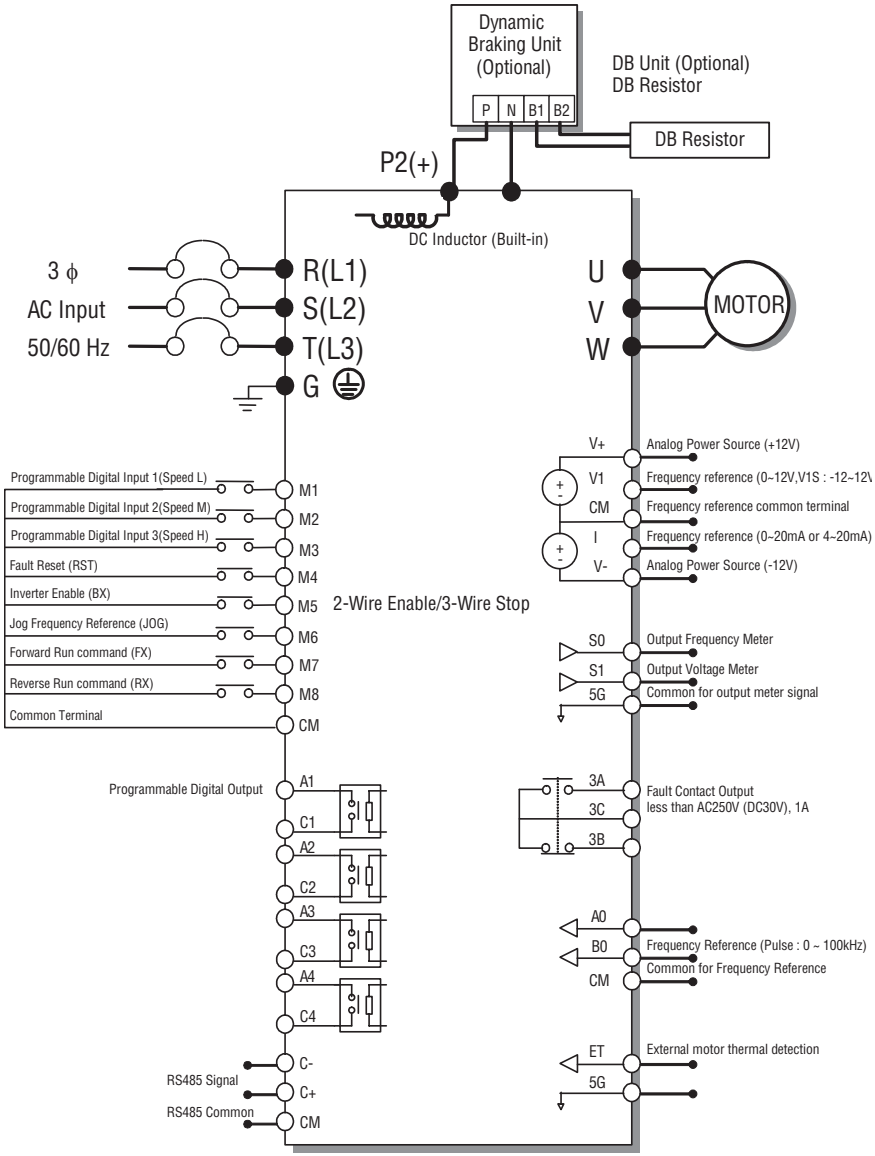

Note: 5G is Common Ground for Analog Meter Output (SO, S1) and external Motor Thermal Detection (ET).

Note: Use Terminal V1 for V1, V1S (0 to 12V, -12 to 12V) input.

4.8.4 Connection Diagram for 7.5 HP - 40 HP 600V Drives

Figure 4-7 Connection Diagram for 7.5 HP - 40 HP 600V Drives

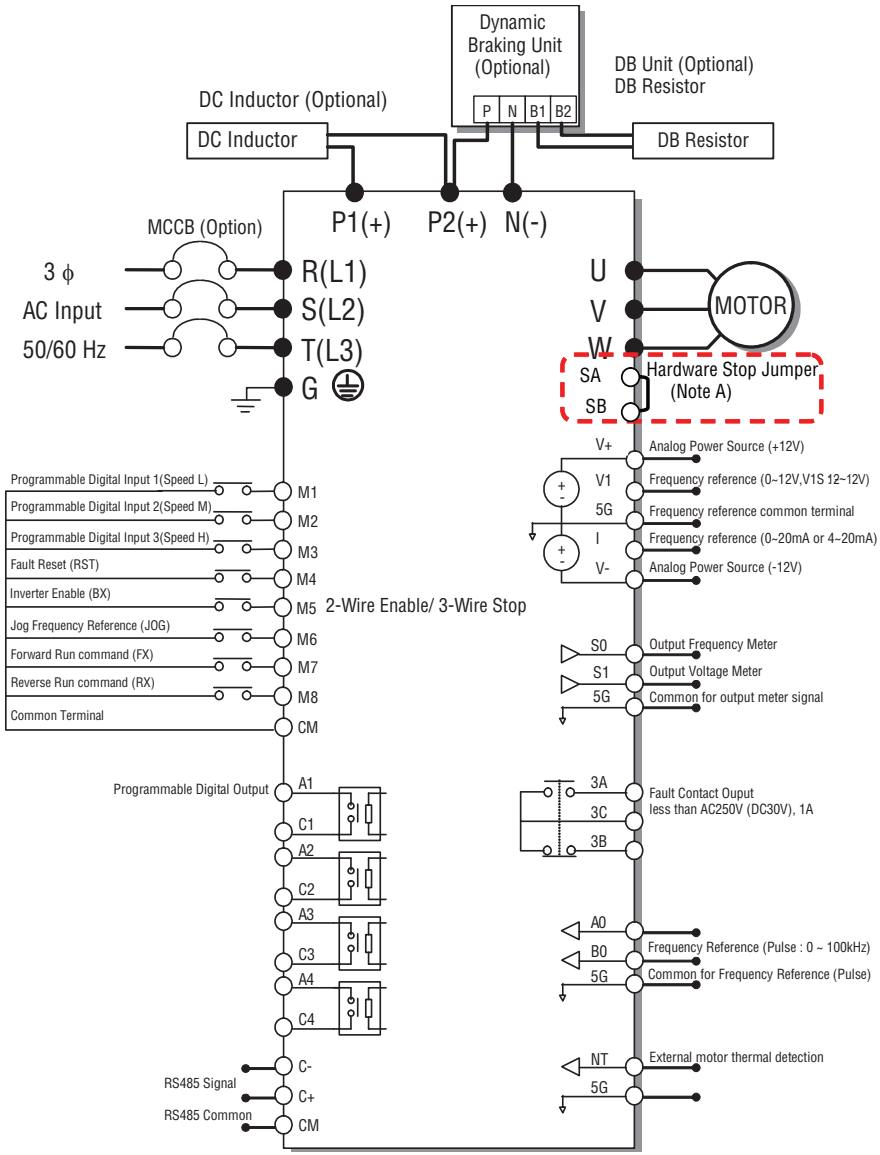

Note A: Don't remove the hardware stop jumper. If the hardware stop jumper (SA&SB) is removed, the drive will stop with "Safety Trip".

4.8.5 Connection Diagram for 50 HP - 125 HP 600V Drives

Figure 4-8 Connection Diagram for 50 HP - 125 HP 600V Drives

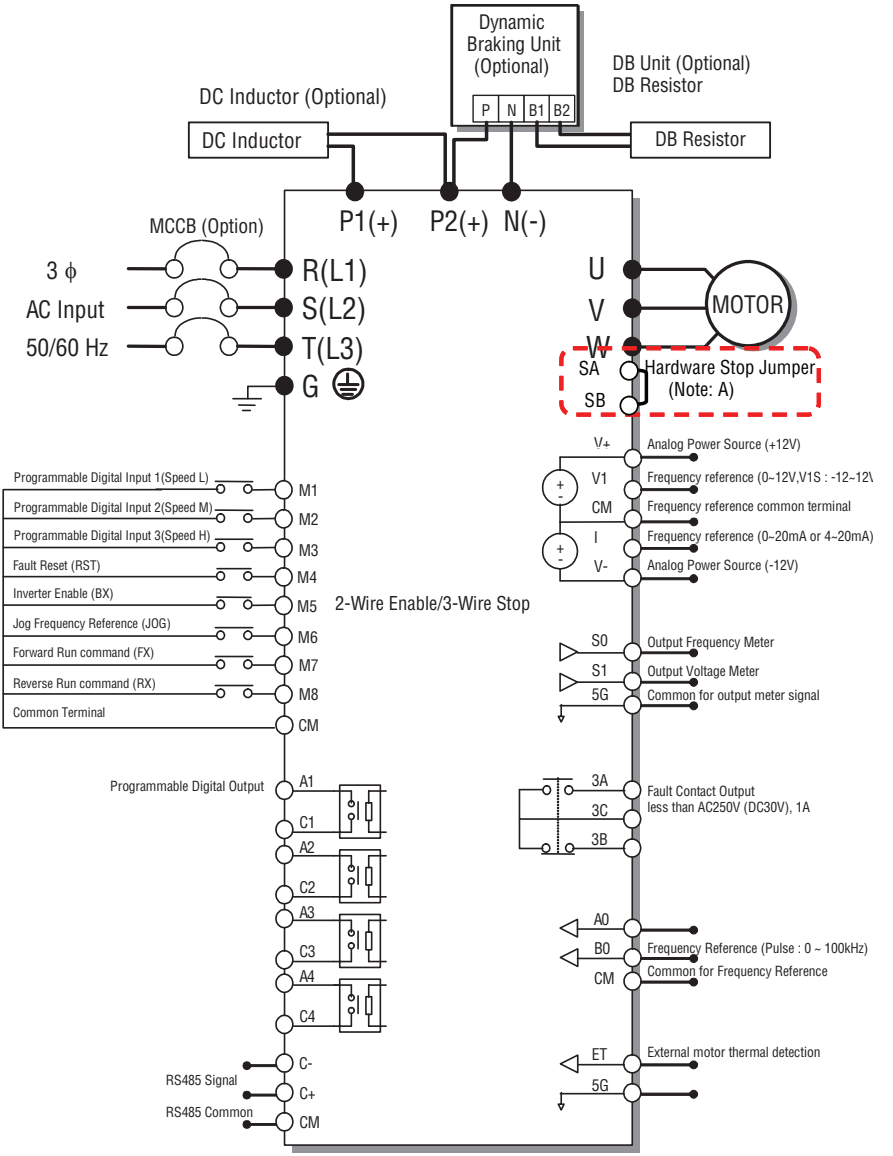

Note A: Don't remove the hardware stop jumper. If the hardware stop jumper (SA&SB) is removed, the drive will stop with "Safety Trip".

4.8.6 Connection Diagram for 150 HP 600V Drive

Figure 4-9 Connection Diagram for 150 HP 600V Drive

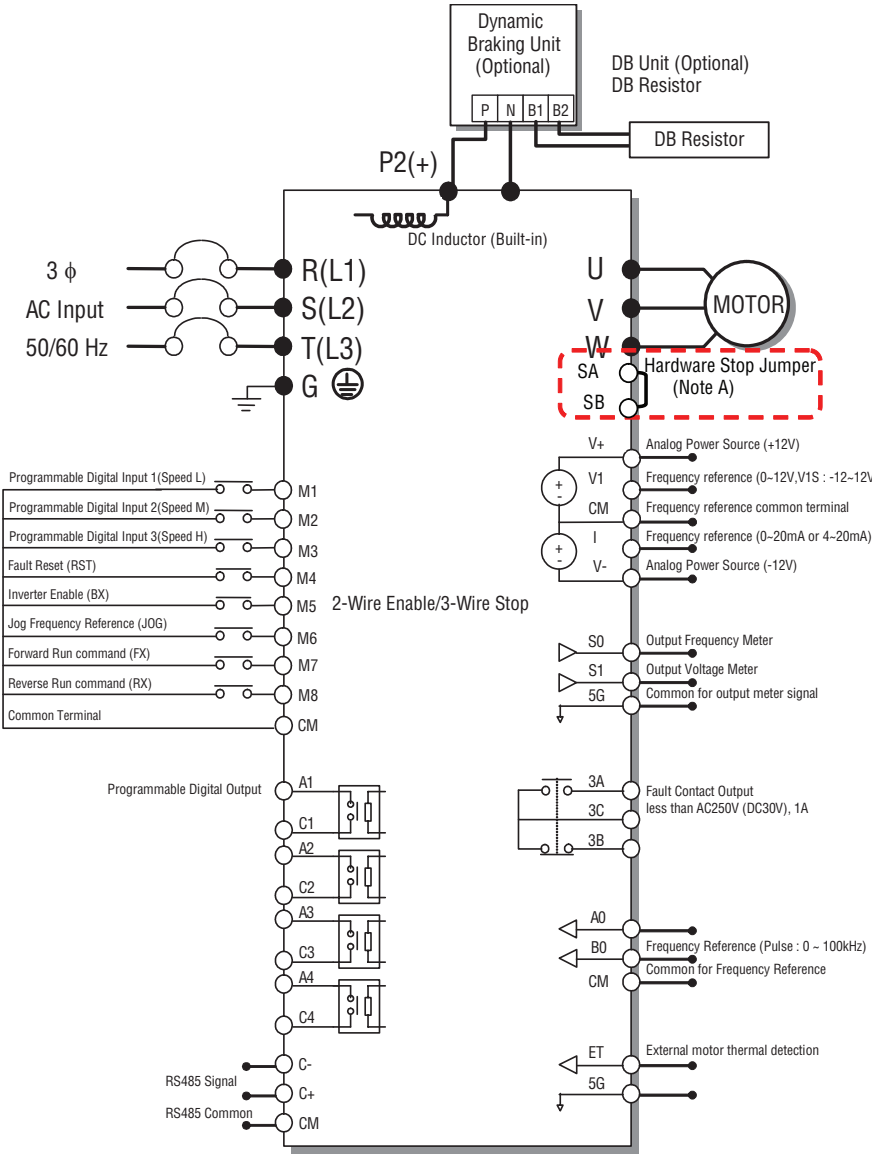

Note A: Don't remove the hardware stop jumper. If hardware stop jumper (SA&SB) is removed, the drive will stop with "Safety Trip".

Chapter 5

Control Wiring

This chapter describes how to connect the signal and I/O terminal strip for stop and remote control signals.

WARNING: **This drive contains high voltage capacitors that take time to discharge after removal of main supply. Before working on the drive, ensure isolation of main supply from line inputs. Wait ten (10) minutes for capacitors to discharge to safe voltage levels. Failure to observe this precaution could result in severe bodily injury or loss of life.**

WARNING: **Only qualifified electrical personnel familiar with the construction and operation of this equipment and the hazards involved should install, adjust, operate, or service this equipment. Read and understand this manual and other applicable manuals in their entirety before proceeding. Failure to observe this precaution could result in severe bodily injury or loss of life.**

WARNING: **DC Bus capacitors retain hazardous voltages after input power has been disconnected. After disconnecting input power, wait ten (10) minutes for the DC Bus capacitors to discharge and then check the voltage with a voltmeter to ensure the DC bus capacitors are discharged before touching any internal components. Failure to observe this precaution could result in severe bodily injury or loss of life.**

CAUTION: **Apply the rated torque to terminal screws. Loose screws can cause short circuit and malfunction. Overtightening the screws can damage the terminals and cause a short circuit and a malfunction.**

CAUTION: **Do not leave wire fragments inside the inverter. Wire fragments can cause faults, breakdowns and malfunctions.**

5.1 Motor Start/Stop Precautions

WARNING: **The drive start/stop control circuitry includes solid-state components. If hazards due to accidental contact with moving machinery or unintentional flow of liquid, gas or solids exist, an additional hardwired stop circuit may be required to remove the AC line to the drive. When the AC line is removed, there will be a loss of any inherent regenerative braking effect that might be present - the motor will coast to a stop. An auxiliary braking method may be required.**

CAUTION: **A contactor or other device that routinely disconnects and reapplies the AC line to the drive to start and stop the motor can cause drive hardware damage. The drive is designed to use control input signals that will start and stop the motor. If used, the input device must not exceed one operation per minute or drive damage can occur. Failure to observe this precaution can result in damage to, or destruction of equipment.**

Important points to remember about I/O wiring:

- Always use copper wire.
- Wire with an insulation rating of 600V or greater is recommended.
- Control and signal wires should be separated from power wires by at least 1 foot (0.3 meters).

5.2 Stop Circuit Requirements

WARNING: **You must provide an external, hardwired emergency stop circuit outside of the drive circuitry. This circuit must disable the system in case of improper operation. Uncontrolled machine operation can result if this procedure is not followed. Failure to observe this precaution could result in bodily injury.**

In addition to the operational stop, you must provide a hardwired emergency stop external to the drive. The emergency stop circuit must contain only hardwired electromechanical components. Operation of the emergency stop must not depend on electronic logic (hardware or software) or on the communication of commands over an electronic network or link.
Note that the hardwired emergency stop can be used at any time to stop the drive.

5.2.1 Wiring Precautions

CM and 5G terminals are insulated from each other. Do not connect these terminals together or to the power ground.

Use shielded wires or twisted wires for control circuit wiring, and separate these wires from the main power circuits and other high voltage circuits (115V relay circuits).

28 AWG (0.0804mm2) to 16 AWG (1.25mm2) wire is recommended for connections to TER1 and TER2 control terminals.

22 AWG (0.33mm2) to 14 AWG (2.0mm2) wire is recommended for connections to TER3 and TER4 control terminals.

Figure 5-1 Control Terminal Diagram

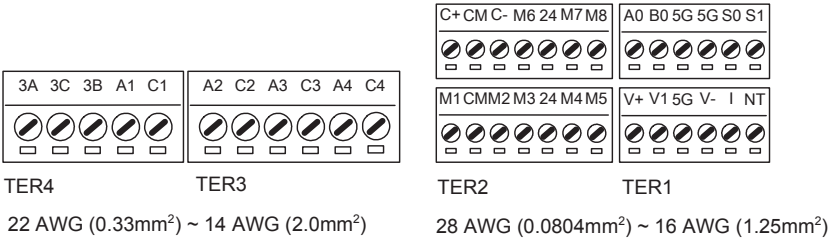

5.2.2 Maximum Control Wire Length Recommendations

Do not exceed control wiring length of 100 feet (30 meters). Control signal cable length is highly dependent on electrical environment and installation practices. To improve noise immunity, the I/O terminal block common must be connected to ground terminal/protective earth.

5.2.3 Check Points on Wiring

- Program the drive to disable auto restart after power failure. Otherwise, the inverter will automatically start upon return of power.
- Do not install jumpers on the control circuit input terminals such as FX, RX.

5.3 Terminal Wiring (Control I/O)

5.3.1 7.5 to 40 HP (230V/460V Class)

Figure 5-2 7.5 to 40 HP Terminal WIring

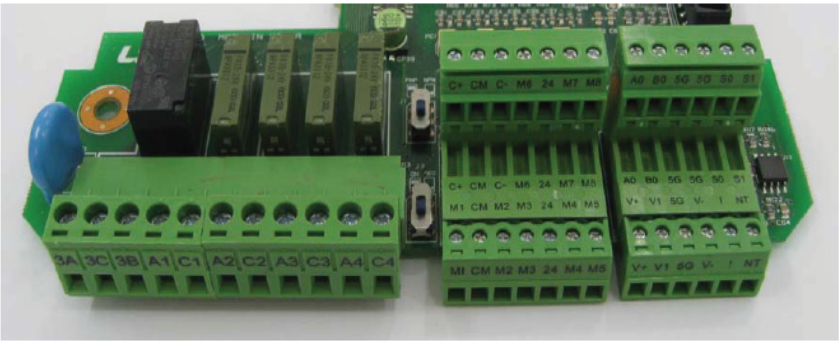

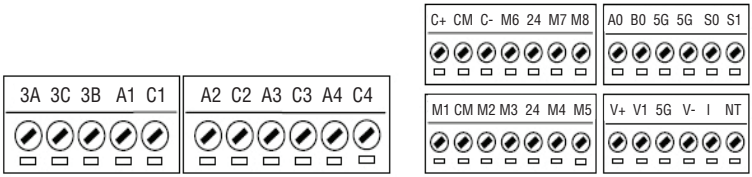

5.3.2 50 to 700 HP (460V Class)

Figure 5-3 50 to 700 HP Terminal Wiring

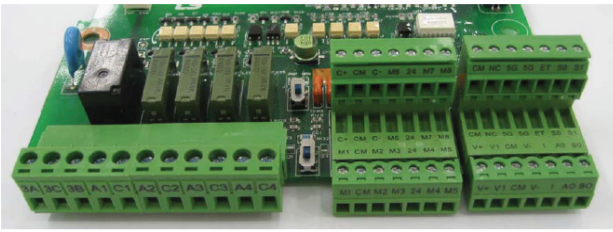

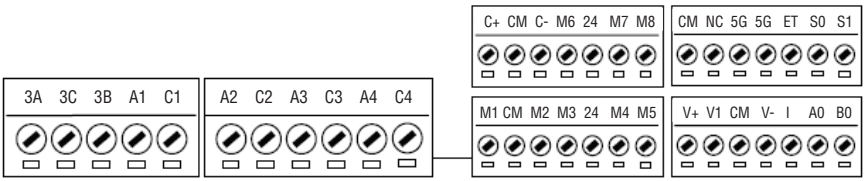

5.3.3 Control Terminal Descriptions

Table 5-1 Control Terminal Descriptions

Type		Symbol	Name	Description	Parameter
Inputs	Digital Inputs (Factory Defaults Shown)	M1, M2, M3	Programmable Digital Input 1, 2, 3	Defines Programmable Digital Inputs. (Preset Speeds 1, 2, 3)	I/O - 20, 21, 22
		FX [M7]	Forward Run Command	Forward Run When Closed and Stopped When Open.	I/O - 26
		RX [M8]	Reverse Run Command	Reverse Run When Closed and Stopped When Open.	I/O - 27
		JOG [M6]	Jog Frequency Reference	Runs at Jog Frequency when the Jog Signal is ON. The Direction is set by the FX (or RX) Signal.	I/O - 25
		BX [M5]	Inverter Enable 2-Wire Enable 3-Wire Stop	When the BX Signal is Open the Output of the Inverter is Turned Off. When Motor uses an Electrical Brake to Stop, BX is used to Turn Off the Output Signal. Take caution when BX Signal is OFF (Not Turned Off by Latching) and FX Signal (or RX Signal) is ON. If so, motor continues to Run.	I/O - 24
		RST [M4]	Fault Reset	Used for Fault Reset.	I/O - 23
		CM	Sequence Common (NPN) / 24V Com.	Common terminal for NPN contact input and also common for the external 24V supply.	
		24	Sequence Common (PNP) / Ext. +24Vdc supply	Common 24V terminal for PNP contact input. Can also be used as a 24Vdc external power supply (maximum output: +24V, 50mA)	
	Analog Inputs	V+, V-	Analog Power Source (+12V,-12V)	Power supply for Analog Frequency Setting. Maximum Output: +12V, 100mA, -12V, 100mA.	
		V1	Frequency Reference (Voltage)	Used by a DC 0-10V or –10 to 10 V input to set the frequency reference. (Input impedance is 20k)	
		I	Frequency Reference (Current)	Used by a 4-20mA input to set the frequency reference. (Input impedance is 249 ohms)	
		A0, B0	Frequency Reference (Pulse)	Used by a pulse input to set the frequency reference.	
		5G (7.5-40HP) CM (50-700HP)	Frequency Reference Common Terminal	Common Terminal for Analog Frequency Reference Signal.	
	External Motor Thermal Detection	NT (7.5-40HP) ET (50-700HP)	External Motor Thermal Detection	Motor thermal sensor input. Used to prevent motor from overheating by using a NTC or PTC thermal sensor.	
		5G	Common for NT (or ET)	Common Terminal for External motor thermal detection.	

Table 5-1 Control Terminal Descriptions Continued					
Type		Symbol	Name	Description	Parameter
RS485 Terminals		C+, C-	RS485 signal High, Low	RS485 signal (See RS485 communication in Appendix E of this manual for more details.)	
		CM	RS485 Common	Common Ground. Terminal for RS485 interface.	
Outputs	Voltage	S0, S1,5G	Programmable Voltage Output	Voltage output for one of the following: Output Frequency, Output Current, Output Voltage, DC Link Voltage. Default is set to Output Frequency. (Maximum Output Voltage and Output Current are 0-12V and 1mA).	
	Relay	3A N.O., 3B N.C., 3C Com	Fault Contact Output	Energizes when a fault is present. (AC250V, 1A; DC30V, 1A) Fault: 3A-3C Closed Normal: 3B-3C Closed	
		A1 to A4, C1 to C4	Programmable Digital Output	Defined by Programmable Digital Output terminal settings (AC250V, 1A; DC30V, 1A)	I/O - 76 -79 = A1 to A4 Common = C1 to C4

Note: M1 to M8 terminals are User Programmable.

Figure 5-4 2Wire Digital Input Connections

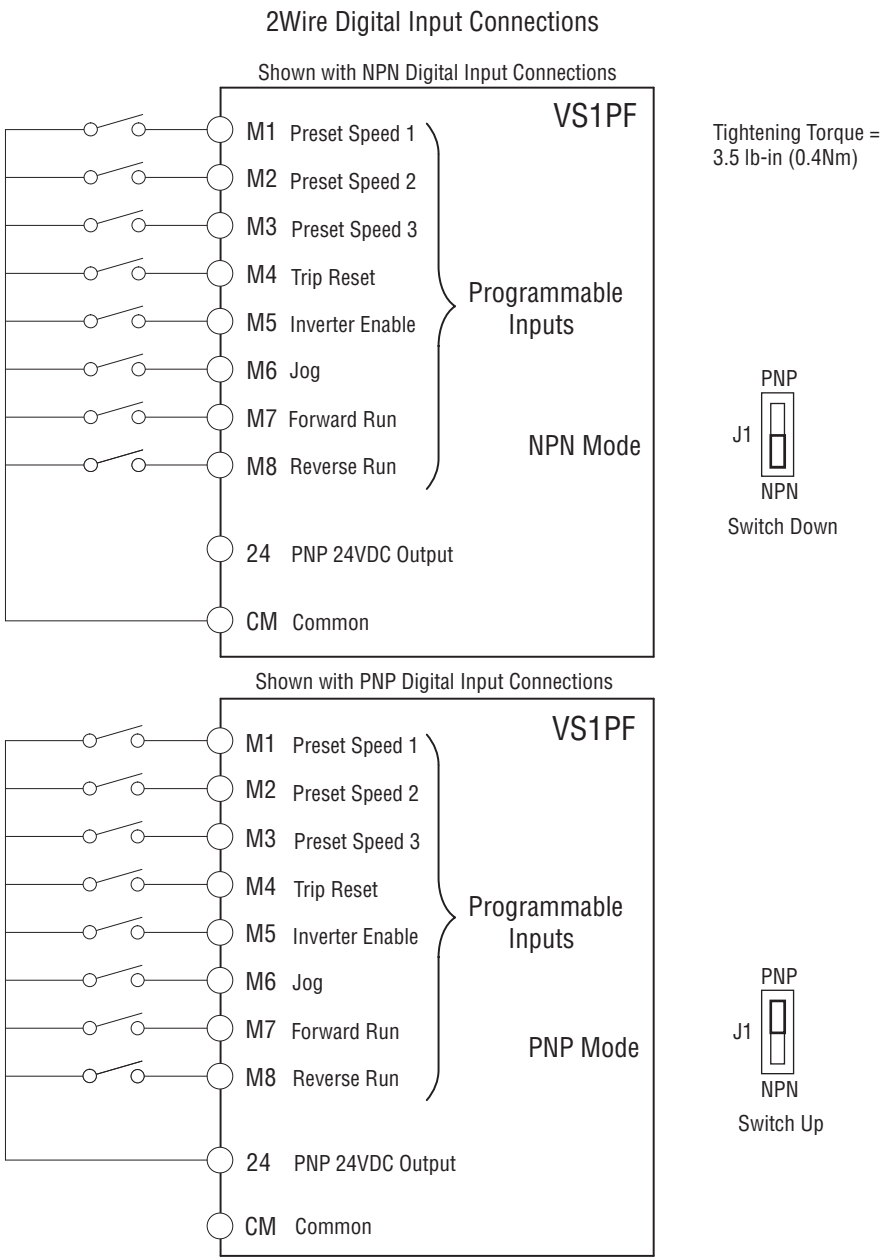

Figure 5-5 3Wire Digital Input Connections

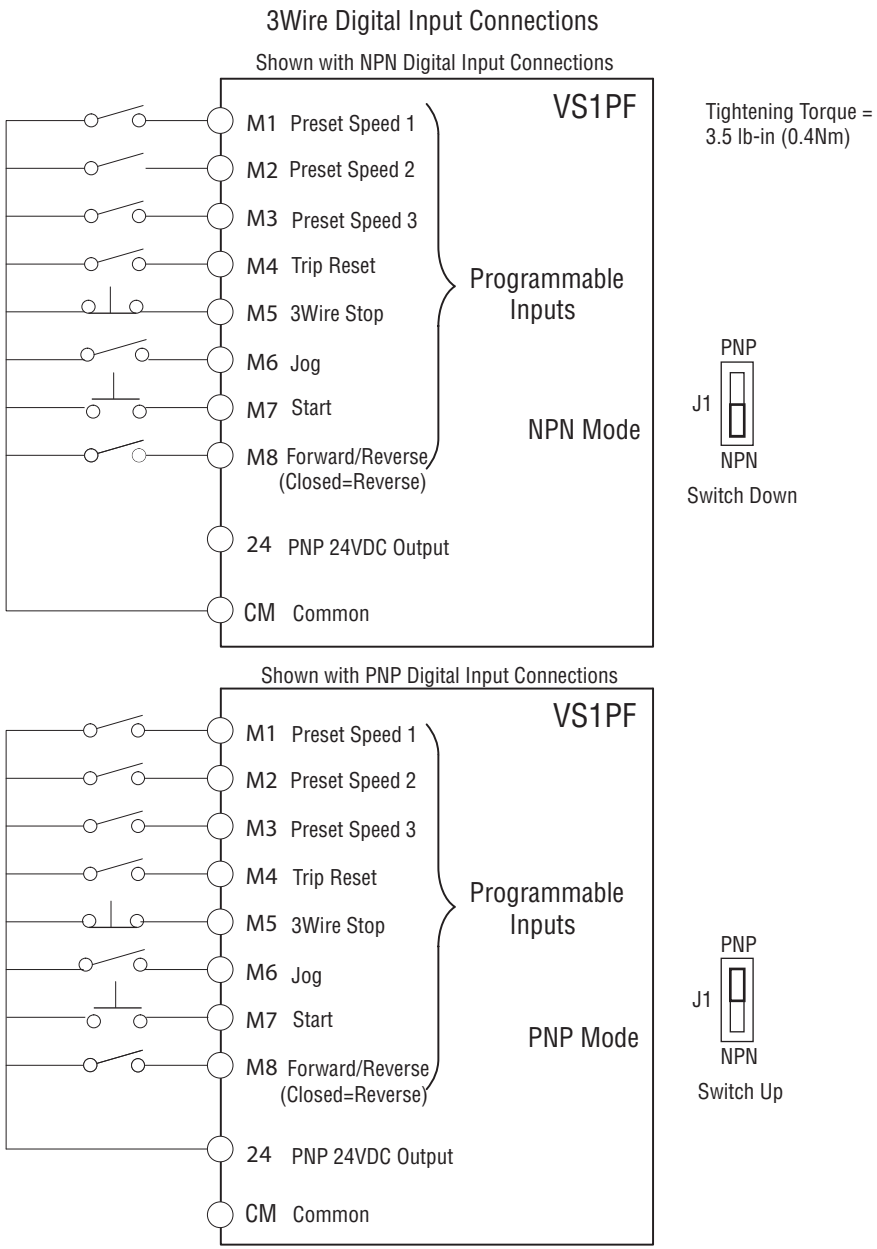

5.4 Sink Mode (NPN mode) / Source Mode (PNP mode)

The VS1PF provides Sink/Source(NPN/PNP) modes for digital input terminals. The logic of the input terminals can be set to Sink Mode (NPN mode) or Source mode (PNP mode) by using the J1 switch. Configuration is shown below.

Sink mode (NPN mode)
Put J1 switch down to set to Sink mode (NPN mode). CM terminal (24V GND) is common terminal for digital inputs. The factory default is Sink mode (NPN mode).

Source mode (PNP mode) - Internal Power Supply used
Put J1 switch up to set to Source mode (PNP mode). Terminal 24 (24V Power Supply) is supply terminal for digital inputs.

Source mode (PNP mode) - External Power Supply used
Put J1 switch up to set to Source mode (PNP mode). To use an external 24V Power supply, provide a connection between the external Power Supply (-) terminal and the CM(24V Common) terminal.

Figure 5-6 Sink Mode / Source Mode Configuration

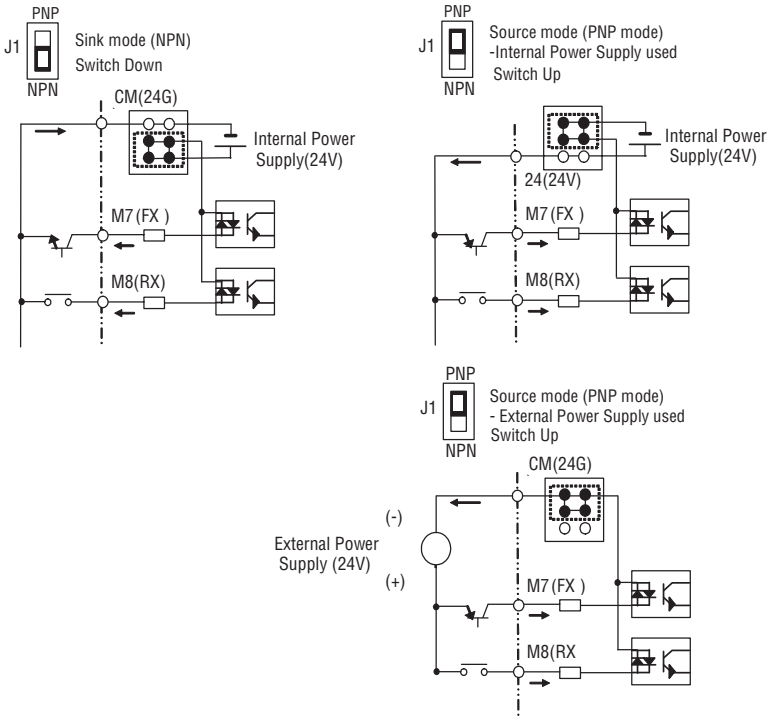

NOTE: I/O terminals labeled “Common” are not referenced to the safety ground terminal and are designed to greatly reduce common mode interference.

CAUTION: **Driving the 4-20mA analog input from a voltage source could cause component damage. Verify proper configuration prior to applying input signals.**

5.5 Connection Mode Examples

5.5.1 2-Wire with Speed Pot Control

Run/Stop operation is controlled by M7 and M8 but motor speeds is controlled by the Speed Pot (V1).

Figure 5-7 2-Wire with Speed Pot Control

Changes from Factory Settings:

Parameter	Setting
FN2-60	Drive Mode=0(V/F)
BAS-08	Start/Stop Source=2(2WireCntl)
BAS-09	Speed Ref. Source=2(0-10V)
BAS-10	Accel Time=15 sec
BAS-11	Decel Time=25 sec
IO-1	Filter TC for V1 Input=10
IO-2	Min Volts for V1 Input=0V
IO-3	Min Freq for Min Volts=0.00Hz
IO-4	Max Volts for V1 Input=10V
IO-5	Max Freq for Max Volts=60.0Hz
IO-26	Digital Input7=FX (Forward Run)
IO-27	Digital Input8=RX (Reverse Run)

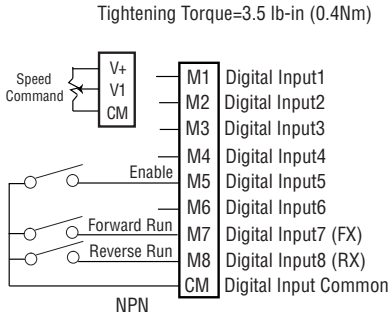

M7	CLOSED Motor starts to rotate in Forward direction with Accel Time BAS-10 to speed set by pot. OPEN Motor decelerates to stop with Decel Time BAS-11.
M8	CLOSED Motor starts to rotate in Reverse direction with Accel Time BAS-10 to speed set by pot. OPEN Motor decelerates to stop with Decel Time BAS-11.

5.5.2 2-Wire with 4-20mA Control

Run/Stop operation is controlled by M7 and M8 but motor speed is controlled by the 4-20mA Input(I).

Figure 5-8 2-Wire with 4-20mA Control

Changes from Factory Settings:

Parameter	Setting
FN2-60	Drive Mode=0(V/F)
BAS-08	Start/Stop Source=2(2WireCntl)
BAS-09	Speed Ref. Source=3(4-20mA)
BAS-10	Accel Time=15 sec
BAS-11	Decel Time=25 sec
IO-6	Filter TC for 4-20 Input=10
IO-7	Min A for I Input=4mA
IO-8	Min Freq for Min Volts=0.00Hz
IO-9	Max A for I Input=10V
IO-10	Max Freq for Max Volts=60.0Hz
IO-26	Digital Input7=FX (Forward Run)
IO-27	Digital Input8=RX (Reverse Run)

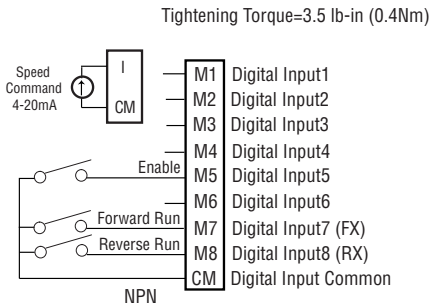

M7	CLOSED Motor starts to rotate in Forward direction with Accel Time BAS-10 to speed set by pot. OPEN Motor decelerates to stop with Decel Time BAS-11.
M8	CLOSED Motor starts to rotate in Reverse direction with Accel Time BAS-10 to speed set by pot. OPEN Motor decelerates to stop with Decel Time BAS-11.

5.5.3 2-Wire with 0-10V Reference Control

Run/Stop operation is controlled by M7 and M8 but motor speed is controlled by a 0-10V signal.

Figure 5-9 2-Wire with 0-10V Reference Control

Changes from Factory Settings:

Parameter	Setting
FN2-60	Drive Mode=0(V/F)
BAS-08	Start/Stop Source=2(2WireCntl)
BAS-09	Speed Ref. Source=2(0-10V)
BAS-10	Accel Time=15 sec
BAS-11	Decel Time=25 sec
IO-1	Filter TC for V1 Input=10
IO-2	Min Volts for V1 Input=0V
IO-3	Min Freq for Min Volts=0.00Hz
IO-4	Max Volts for V1 Input=10V
IO-5	Max Freq for Max Volts=60.0Hz
IO-26	Digital Input7=FX (Forward Run)
IO-27	Digital Input8=RX (Reverse Run)

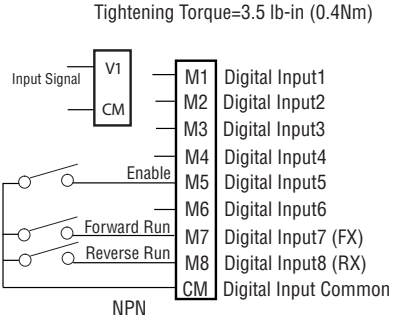

M7	CLOSED Motor starts to rotate in Forward direction with Accel Time BAS-10 to speed set by pot. OPEN Motor decelerates to stop with Decel Time BAS-11.
M8	CLOSED Motor starts to rotate in Reverse direction with Accel Time BAS-10 to speed set by pot. OPEN Motor decelerates to stop with Decel Time BAS-11.

5.5.4 2-Wire Start/Stop with Keypad Reference

The Keypad mode allows the control to be operated from the keypad but the Run/Stop operation is controlled by M7 and M8.

Figure 5-10 2-Wire Start/Stop with Keypad Reference

Changes from Factory Settings:

Parameter	Setting
FN2-60	Drive Mode=0(V/F)
BAS-08	Start/Stop Source=2WireCntl
BAS-09	Speed Ref. Source=0(Keypad)
BAS-10	Accel Time=15 sec
BAS-11	Decel Time=25 sec
IO-26	Digital Input7=FX (Forward Run)
IO-27	Digital Input8=RX (Reverse Run)

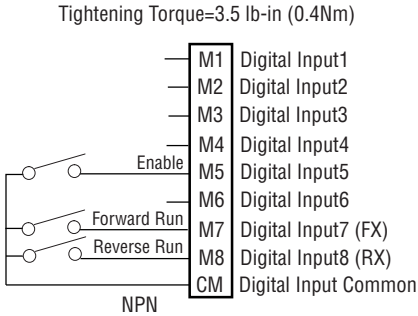

M7	CLOSED Motor starts to rotate in Forward direction with Accel Time BAS-10. OPEN Motor decelerates to stop with Decel Time BAS-11.
M8	CLOSED Motor starts to rotate in Reverse direction with Accel Time BAS-10. OPEN Motor decelerates to stop with Decel Time BAS-11.

5.5.5 2-Wire with EPOT Control

Run/Stop operation is controlled by M7 and M8 but motor speed is controlled by switches at Digital Inputs M1 and M2.

Figure 5-11 2-Wire with EPOT Control

Tightening Torque=3.5 lb-in (0.4Nm)

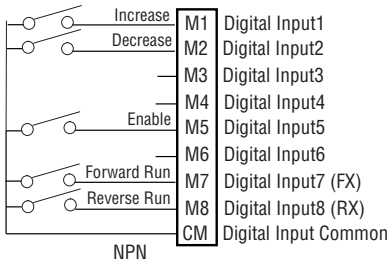

Changes from Factory Settings:

Parameter	Setting
FN2-60	Drive Mode=0(V/F)
BAS-08	Start/Stop Source=2(2WireCntl)
BAS-10	Accel Time=15 sec
BAS-11	Decel Time=25 sec
IO-20	Digital Input1=10 (Up)
IO-21	Digital Input2=11 (Down)
IO-26	Digital Input7=FX (Forward Run)
IO-27	Digital Input8=RX (Reverse Run)
M1	CLOSED Motor increases speed while switch is closed. OPEN Motor maintains speed.
M2	CLOSED Motor decreases speed while switch is closed. OPEN Motor maintains speed.
M7	CLOSED Motor starts to rotate in Forward direction with Accel Time BAS-10 to speed set by I input. OPEN Motor decelerates to stop with Decel Time BAS-11.
M8	CLOSED Motor starts to rotate in Reverse direction with Accel Time BAS-10 to speed set by I input. OPEN Motor decelerates to stop with Decel Time BAS-11.

5.5.6 3-Wire with Speed Pot Control

Start/Direction/Stop is controlled by M7, M8, and M5 but motor speed is controlled by the Speed Pot (V1).

Figure 5-12 3-Wire with Speed Pot Control

Changes from Factory Settings:

Parameter	Setting
FN2-60	Drive Mode=0(V/F)
BAS-08	Start/Stop Source=3(3WireCntl)
BAS-09	Speed Ref. Source=2(0-10V)
BAS-10	Accel Time=15 sec
BAS-11	Decel Time=25 sec
IO-1	Filter TC for V1 Input=10
IO-2	Min Volts for V1 Input=0V
IO-3	Min Freq for Min Volts=0.00Hz
IO-4	Max Volts for V1 Input=10V
IO-5	Max Freq for Max Volts=60.0Hz
IO-26	Digital Input7=FX (Start)
IO-27	Digital Input8=RX (Direction)
M7	CLOSED Motor starts to rotate with Accel Time BAS-10 to speed set by pot. OPEN Motor decelerates to stop with Decel Time BAS-11.
M8	OPEN or CLOSED Motor starts to rotate in either direction with Accel Time BAS-10 to speed set by pot.

Tightening Torque=3.5 lb-in (0.4Nm)

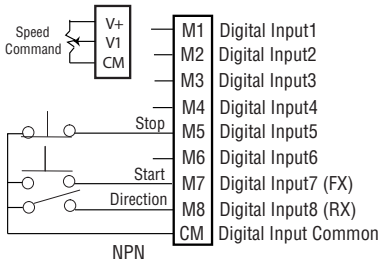

5.5.7 3-Wire with 4-20mA Control

Start/Direction/Stop is controlled by M7, M8, and M5 but motor speed is controlled by the 4-20mA Input (I).

Figure 5-13 3-Wire with 4-20mA Control

Changes from Factory Settings:

Parameter	Setting
FN2-60	Drive Mode=0(V/F)
BAS-08	Start/Stop Source=3(3WireCntl)
BAS-09	Speed Ref. Source=3(4-20mA)
BAS-10	Accel Time=15 sec
BAS-11	Decel Time=25 sec
IO-6	Filter TC for 4-20 Input=10
IO-7	Min A for I Input=4mA
IO-8	Min Freq for Min Volts=0.00Hz
IO-9	Max A for I Input=10V
IO-10	Max Freq for Max Volts=60.0Hz
IO-26	Digital Input7=FX (Start)
IO-27	Digital Input8=RX (Direction)

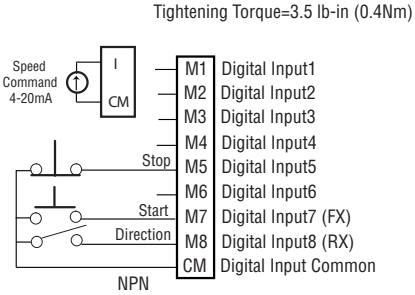

M7	CLOSED Motor starts to rotate with Accel Time BAS-10 to speed set by I input. OPEN Motor decelerates to stop with Decel Time BAS-11.
M8	OPEN or CLOSED Motor starts to rotate in either direction with Accel Time BAS-10 to speed set by I input.

5.5.8 3-Wire with 0-10V Reference Control

Start/Direction/Stop is controlled by M7, M8, and M5 but motor speed is controlled by a 0-10V signal.

Figure 5-14 3-Wire with 0-10V Reference Control

Changes from Factory Settings:

Parameter	Setting
FN2-60	Drive Mode=0(V/F)
BAS-08	Start/Stop Source=3(3WireCntl)
BAS-09	Speed Ref. Source=2(0-10V)
BAS-10	Accel Time=15 sec
BAS-11	Decel Time=25 sec
IO-1	Filter TC for V1 Input=10
IO-2	Min Volts for V1 Input=0V
IO-3	Min Freq for Min Volts=0.00Hz
IO-4	Max Volts for V1 Input=10V
IO-5	Max Freq for Max Volts=60.0Hz
IO-26	Digital Input7=FX (Start)
IO-27	Digital Input8=RX (Direction)

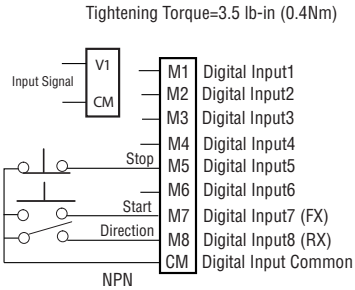

M7	CLOSED Motor starts to rotate with Accel Time BAS-10 to speed set by input signal. OPEN Motor decelerates to stop with Decel Time BAS-11.
M8	OPEN or CLOSED Motor starts to rotate in either direction with Accel Time BAS-10 to speed set by input signal.

5.6 RS485 Circuit Wiring

Use C+ (RS485 signal High), C- (RS485 signal LOW) in TER 2. Turn the J3 switch ON (Upward) to connect the termination resistor (120 ohm). J3 switch is on the left side of the TER2.

Table 5-2 RS485 Circuit Wiring

C+	CM	C-	M6	24	M7	M8	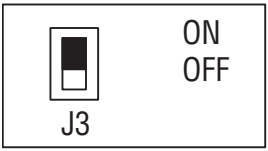
M1	CM	M2	M3	24	M4	M5	

Table 5-3 Communication Specifications

Item	Specification
Transmission type	Bus method, Multi drop Link System
Number of inverters	Up to 31
Transmission distance	Within 3900 ft (1200m) Max. (2300 ft desired)
Recommendable cable	0.75mm2(18AWG), Shielded Twisted-pair Cable

Table 5-4 Communication Terminals Specifications

Item	Specification
Installation	C+, C-, CM terminals on the control terminal block
Power supply	Insulated from the inverter power supply

Refer to Appendix E for additional information regarding RS485 communications.

5.7 Technical Specifications

Please see Appendix A - Technical Specifications for detailed electrical information on the VS1PF Drive.

Chapter 6

Using the Keypad

6.1 Mode Descriptions

The VS1PF drive can be in several different modes that each have a different function. The information displayed on the LCD portion of the keypad as well as the function of the keys may change based upon which mode the drive is in.
The following sub-sections give a definition of each of the modes.

6.1.1 Operation Mode

The operation mode is the mode from which the drive is normally run (Start/Stop/Adjust Speed). The functionality of the keypad is determined by how the drive is programmed for the source of logic control and/or for the source of the speed reference. For example, if the keypad is set as the source for forward, reverse, and stop commands and the keypad is set as the source for the speed reference, then the keypad provides the ability to start and stop the drive as well as modifying the commanded speed.

The operation mode also provides a monitor display that indicates several key states and variables that are useful while running the drive (e.g. speed, current).

The operation mode will be entered automatically upon power-up of the drive, regardless of the mode the drive was in prior to removing power. There is also a time-out setting in the drive that will cause the drive to automatically return to the operation mode should there not be any keypad activity for the user selectable time period.

6.1.2 Group Mode (Program)

The VS1PF parameters are organized into eight parameter groups. To view/program the parameters, the “Group” mode is used to select the desired parameter group.

6.1.3 Parameter Mode (Program)

The parameter mode consists of two modes defined in the following sections.

6.1.3.1 Parameter View Mode

This level is entered from the “Group” mode. This mode is used to view parameter values within the selected group.

6.1.3.2 Parameter Edit Mode

The mode that is used to modify the setting/value of the VS1PF is defined as the “Parameter Edit Mode”. This mode is accessed from the “Parameter View Mode”.

6.2 Keypad Components

The LCD keypad can display up to 32 alphanumeric characters (2 lines by 16 characters), and various settings can be checked directly from the display. The following is an illustration of the keypad with a description of the components.

Figure 6-1 Keypad Components

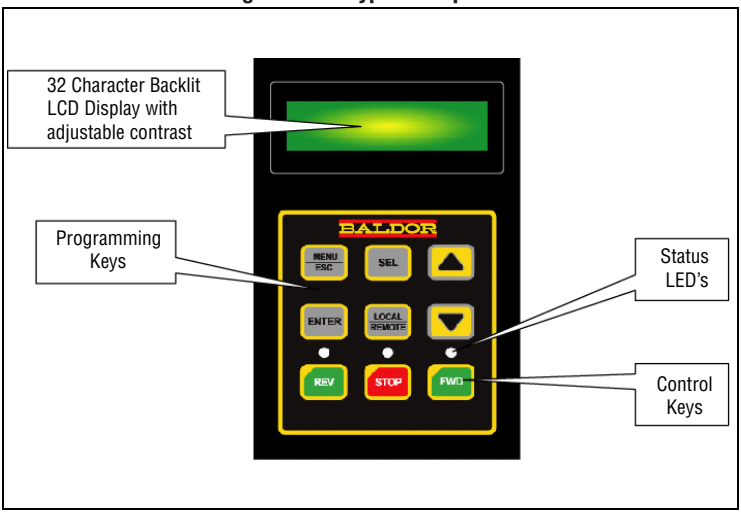

6.2.1 Display Description

The backlit LCD display is used to monitor specific operational parameters of the drive as well as serving as the primary interface while viewing and modifying parameters.

6.2.2 LED Descriptions

There are 3 LED's located above the control keys (REV, STOP, FWD).

6.2.2.1 Reverse LED

The left-most LED, located above the REV control key, is green. If the drive is stopped, the LED will be off. Upon starting the drive in the reverse direction, the LED will flash at approximately a 2Hz rate while the motor is accelerating to the target speed. Upon reaching the target speed, the LED will illuminate continuously. If the direction is changed, the LED will flash while decelerating towards zero and will turn off once the motor has started rotating forward and is accelerating to the target speed in the forward direction. Upon stopping the drive, the LED will flash while decelerating and then will turn off upon drive disable. If the drive is programmed for coast stop, the LED will turn off immediately upon execution of the stop command.

6.2.2.2 Stop / Fault LED

The center LED, located above the STOP control key, is red. If the drive is stopped but ready to run, the LED will be on continuously. If the drive is faulted or any other condition exists that will prohibit the drive from running when a start or run command is issued, the LED will be flashing at approximately a 2Hz rate. The LED will be off any time the drive is supplying power to the motor.

6.2.2.3 Forward LED

The right-most LED, located above the FWD control key, is green. If the drive is stopped, the LED will be off. Upon starting the drive in the forward direction, the LED will flash at approximately a 2Hz rate while the motor is accelerating to the target speed. Upon reaching the target speed, the LED will illuminate continuously. If the direction is changed, the LED will flash while decelerating towards zero and will turn off once the motor has started rotating reverse and is accelerating to the target speed in the reverse direction. Upon stopping the drive, the LED will flash while decelerating and then will turn off upon drive disable. If the drive is programmed for coast stop, the LED will turn off immediately upon execution of the stop command.

6.3 Key Description

Table 6-1 Keypad Description

Graphic	Name	Function
STOP	Stop/Reset	**All modes:** • If the drive is running, stops the drive, even if the keypad is not the control source (always active). • If the drive is not running and is faulted, resets the fault if the condition causing the fault has been remedied. • If the drive is not running and is not faulted, no action. • The stop button always takes priority over other commands.
FWD	Stop Key	**All modes:** • If the keypad is not programmed as the control source, no action. • If forward operation of the drive is programmed to be inhibited, no action. • If the drive is stopped and faulted, no action, regardless of the control source. • If the drive is stopped, not faulted, and the keypad is programmed as the control source, the motor will start in the forward direction and continue to run upon release of the button. • If the drive is running in the reverse direction, the motor will decelerate to zero and then ramp to the programmed speed in the forward direction.
REV	Reverse	**All modes:** • If the keypad is not programmed as the control source, no action. • If reverse operation of the drive is programmed to be inhibited, no action. • If the drive is stopped and faulted, no action, regardless of the control source. • If the drive is stopped, not faulted, and the keypad is programmed as the control source, the motor will start in the reverse direction and continue to run upon release of the button. • If the drive is running in the forward direction, the motor will decelerate to zero and then ramp to the programmed speed in the reverse direction.

Table 6-1 Keypad Description Continued

Graphic	Name	Function
▲ ▼	Up/Down Arrows	**Operation Mode:** • If the keypad is not programmed as the speed reference source (or as PID reference source), no action. • If the keypad is programmed as the speed reference source (or as PID reference source), the up/down keys change the commanded speed reference (or PID reference). **Group Mode:** • The up/down keys are used to scroll through the program groups. When the end of the list of program groups is reached, the continued actuation of the key in that direction will wrap around back to the opposite end of the list. **Parameter View Mode:** • The up/down keys will increment/decrement the parameter number that is being viewed within a group. When the highest parameter in the list is reached, a subsequent push of the up arrow will wrap around to the lowest parameter in the list. When the lowest parameter in the list is reached, the down arrow will wrap around to the highest parameter. **Parameter Edit Mode:** • The up/down keys will increment/decrement the value of the selected digit of the selected parameter. If the selected digit is incremented past 9, it will change to a 0 and automatically increment the digit to its left by 1 count. If the selected digit is decremented past 0, it will change to a 9 and automatically decrement the digit to its left by 1 count. If a value is incremented/decremented to its upper/lower limit, no further adjustments in that direction will take place.
SEL	Select	**Operation Mode:** • Used to select various monitor screens. Multiple run time displays will be defined and the select key is used to switch between these screens. **Group Mode:** • Same action as the up arrow **Parameter View Mode:** • Same action as the up arrow **Parameter Edit Mode:** • When the parameter edit mode is entered, the cursor will highlight the least significant digit (right-most digit) of the value for numerical parameters. The select key is used to select the next most significant digit (effectively move the cursor to the left by one position). When the left-most digit is reached, a subsequent push of the select key will cause the cursor to select the least significant digit of the value. • When editing the value of an enumerated parameter (a parameter where the value is chosen from a list), the select key has no action. • When editing the value of a bit parameter, the select key moves the cursor to the left by one bit. When the cursor is on the left-most bit, a subsequent push of the select key will cause the cursor to select the least significant bit of the parameter value.

Table 6-1 Keypad Description Continued

Graphic	Name	Function
ENTER	Enter	**Operation Mode:** • Used to select various monitor screens like the select key. The only difference is that it will navigate you through the monitor screens in the opposite sequence from the select key. **Group Mode:** • Used to enter the parameter view mode within the selected group. **Parameter View Mode:** • Used to enter the parameter edit mode for the selected parameter. **Parameter Edit Mode:** • Used to accept the new value for the parameter that is being edited.
MENU / ESC	Menu/ Escape	**Operation Mode:** • Pressing the menu/escape key will place the drive in the group mode. **Group Mode:** • Pressing the menu/escape key will place the drive in the operation mode. **Parameter View Mode:** • Pressing the menu/escape key will place the drive in the group mode. **Parameter Edit Mode:** • Pressing the menu/escape key will abort the change in the parameter value and place the drive in the parameter view mode, restoring the previous value of the parameter prior to entering the parameter edit mode.
LOCAL / REMOTE	Local/ Remote	**All Modes:** • Pressing the local/remote button will toggle between what is defined in the drive as local and remote. Parameters shall be implemented to define the action of this button. For example, the button could be disabled, it could be used to toggle the reference source, it could be used to toggle the control source, or it could be used to toggle both the reference and control source.

6.4 About Parameters

To program the drive for a specific application, you adjust the appropriate parameters. The parameters are used to define characteristics of the drive.

There are three types of parameters:

- Numbered List Parameters (Enumerated Parameters)
  Numbered list parameters allow a selection from two or more options.
  Each item is represented by a number.
  Example: Start/Stop Source (BAS-08)

- Bit Parameters
  Bit parameters have individual bits associated with features or conditions. If the bit is 0, the feature is off or the condition is false. If the bit is 1, the feature is on or the condition is true.
  Example: Flying Start Selection (FN2-22)

- Numeric Parameters
  These parameters have a single numerical value (for example, 0.1 volts).
  Example: Motor Nameplate Current (BAS-04)

Parameters also have an attribute that defines whether the parameter is configurable, tunable, or read-only.

Configurable parameters can be adjusted or changed only while the drive is stopped.
Tunable parameters can be adjusted or changed while the drive is running or stopped.
Read-only parameters cannot be adjusted (can only be viewed).

Parameters have an additional attribute that determines when the user has access to the parameter. The two levels of access are BASIC and ADVANCED. The access level for parameters is set in parameter FN2-90.

6.5 How Parameters are Organized

Parameters are organized into six standard parameter groups and two additional option groups which only appear when the appropriate option is installed on the drive.

- The **Basic Parameter Group (BAS)** contains parameters that are very basic in nature and typically what are required to start up most applications.

- The **Drive Parameter Group (DRV)** contains parameters that allow the implementation of the more common application enhancements.

- The **Function 1 Parameter Group (FN1)** contains parameters that allow the implementation of custom setup of certain applications and standard operation modes of the drive.

- The **Function 2 Parameter Group (FN2)** contains parameters that allow the implementation of custom setup of certain applications and standard operation modes of the drive.

- The **I/O Parameter Group (I/O)** contains parameters that are used to customize the function of the drive's inputs and outputs (analog and digital).

- The **Application Parameter Group (APP)** contains parameters that are used to set up customer applications requiring the use of the PID loops in the drive. Additional parameters are included to manage the operation of a second motor with the drive utilizing a separate group of motor parameters.

- The **Extension Parameter Group (EXT)** contains parameters that support extension option boards. This group will not appear unless an option board requiring parameter support is installed on the drive.

- The **Communications Parameter Group (COM)** contains parameters that are used to support a communications option board when installed. This group will not appear unless an option board requiring parameter support is installed on the drive.

6.6 Moving Between Parameter Groups

When the Menu/Escape key is pressed from the operation mode, the drive will enter the Group Mode allowing the user to select which menu group they desire to enter. The below graphic depicts the screens in this mode and the navigation between screens. Once in this mode, pressing the Enter key takes you into the parameter view mode; pressing the Program/Escape key takes you back to the operation mode:

Figure 6-2 Menu Grouping

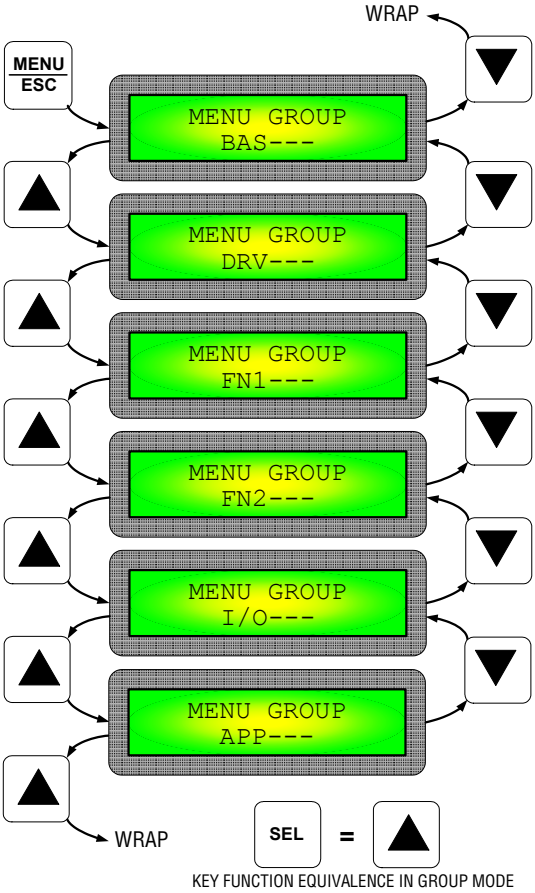

6.7 Changing Between Parameters within a Group

When in the Group Mode, pressing the Enter key places the drive in the Parameter View Mode so that the parameters within the selected group can be viewed. The below graphic shows a typical parameter while in the view mode:

Figure 6-3

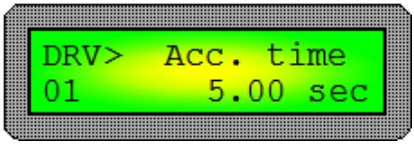

The up and down arrows allow navigation within the list of parameters for a particular group. The group is displayed in the top left corner of the display and the parameter number is displayed in the bottom left corner of the display. A text description and the current value of the parameter is also shown on the display.

6.8 Modifying the Value of a Parameter

From the Parameter View Mode, the value can be edited (contingent on the attributes of the given parameter and the current state of the drive) by pressing the ENTER key placing the product in the Parameter Edit Mode. While in this mode, all available character placeholders of the parameter value are displayed in reversed video. The cursor will automatically be placed on the right-most character (least significant digit) and will be flashing from reverse video to normal video at approximately a 2Hz rate. The below graphic shows a typical parameter while in the Parameter Edit Mode:

Figure 6-4

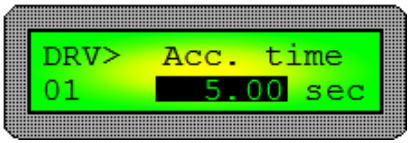

The up, down, and select keys are used to modify the value of the parameter. The ENTER key is used to accept the value and the ESC/MENU is used to abort the modification of the parameter value.

6.9 Monitoring Display Parameters

When the drive powers up, it will automatically enter the operation mode thus allowing the display of monitor and status information pertinent to the normal operation of the drive. Multiple screens are available as depicted below. The below graphic outlines the contents of the displays available after powerup and while in the operation mode:
Note: The power up screen can be selected at parameter FN2-80.

Figure 6-5 Operation Mode Monitor Displays

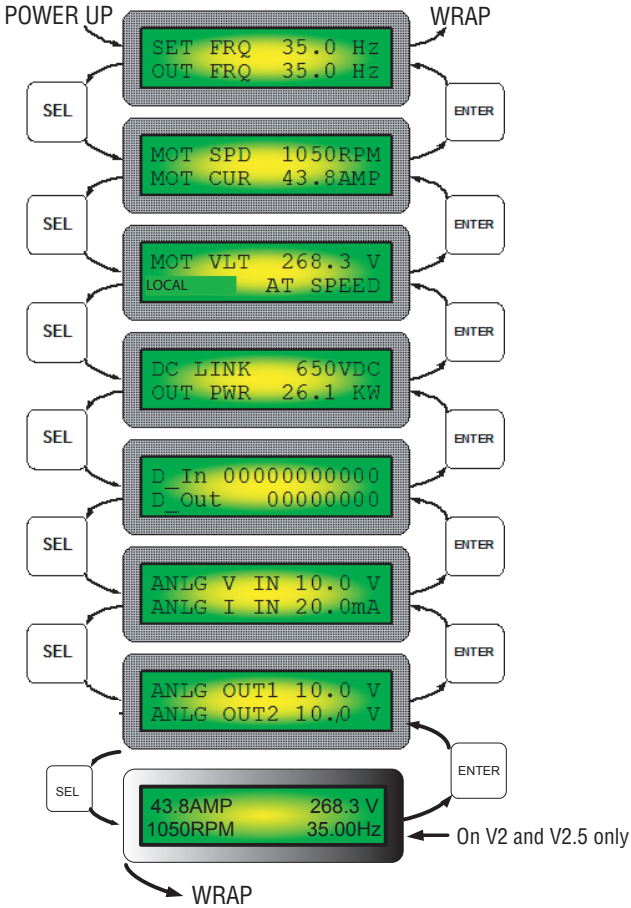

6.10 Reviewing the Active Fault Status

When the VS1PF experiences a condition that causes a fault, the drive will immediately disable power to the motor. The STOP/FAULT LED will blink and the cause of the fault will be displayed in parameter DRV-12 (the display will automatically display this parameter). By pressing the ENTER key, the output frequency that was being output by the drive at the time of the fault will be displayed. Pressing the UP arrow will display the output current that was being supplied by the drive when the fault occurred. Pressing the UP arrow again will display the status of the drive during the fault (e.g. accelerating, decelerating, at speed). Pressing the MENU/ESC key returns to the parameter view mode.

6.11 Resetting the Parameters to the Factory Default

From the operation mode, press the MENU/ESC button to place the drive in the group mode. Press the UP arrow until the FN2 (Function Group 2) is displayed. Press the ENTER key to enter the parameter view mode. Press ENTER to modify the value of the Jump Code to 93 and press ENTER. This will place you in the parameter view mode viewing Parameter FN2-93 “Factory Set”. Press the ENTER key to modify the value of FN2-93. Use the UP arrow to select “All Groups” or to select just one group that you wish to reset to defaults. Press ENTER to carry out the action or press MENU/ESC to abort the procedure.
Note: Parameter FN93 in the Advanced Display group will not be shown unless FN2-90 = Advanced.

6.12 Parameter Upload/Download Using Keypad

6.12.1 Copying Parameters to Keypad

The parameter set for the VS1PF can be stored in the keypad for the purpose of copying them into a different drive or for archiving them for maintenance purposes (e.g. if the parameters are being temporarily changed for a different application and need to be returned to the original setup later). This is useful for programming multiple drives to have the same parameter setting. The LCD Keypad can read (upload) the parameter settings from the inverter memory and can write (download) them to other drives.

6.12.2 Downloading Stored Parameters from Keypad to Drive

From the operation mode, press the MENU/ESC button to place the drive in the group mode. Press the UP arrow until the FN2 (Function Group 2) is displayed. Press the ENTER key to enter the parameter view mode. Press ENTER to modify the value of the Jump Code to 92 and press ENTER. This will place you in the parameter view mode viewing Parameter FN2-92 “Parameter Write”. Press the ENTER key to modify the value of FN2-92. Use the UP arrow to select “YES”. Press ENTER to carry out the action or press MENU/ESC to abort the procedure.
Note: Parameter FN91 and 92 are in Advanced Display group and will not be shown unless FN2-90 = Advanced.
Note: Parameter FN2-95 saves changed parameter values to non-volatile memory within the drive. See parameter descriptions for further explanation.

Chapter 7

Parameter Descriptions

7.1 Overview

The following information is provided for each parameter listed in this chapter along with its description:

Parameter Number:	Unique number assigned to each parameter.
Parameter Name:	Unique name assigned to each parameter.
LCD Display:	Display shown on LCD screen when parameter is accessed.
Range:	Predefined parameter limits or selections. Note that a negative Hz value indicates reverse rotation.
Default:	Factory default setting.
Access:	Parameter access level. Basic (reduced parameter set) Advanced (full parameter set)
See also:	Associated parameters that may provide additional or related information.

The parameters are presented in numerical order within each of the six groups (Basic, Drive, Function1, Function 2, Input/Output, Application, External Option, and Communcation Option). Appendix X contains a list of parameters by name cross-referenced to parameter number.

Parameters are organized into Parameter Groups:

- The **Basic Parameter Group (BAS)** contains parameters that are very basic in nature and typically what are required to start up most applications.
- The **Drive Parameter Group (DRV)** contains parameters that allow the implementation of the more common application enhancements.
- The **Function 1 Parameter Group (FN1)** contains parameters that allow the implementation of custom setup of certain applications and standard operation modes of the drive.
- The **Function 2 Parameter Group (FN2)** contains parameters that allow the implementation of custom setup of certain applications and standard operation modes of the drive.
- The **I/O Parameter Group (I/O)** contains parameters that are used to customize the function of the drive's inputs and outputs (analog and digital).
- The **Communications Parameter Group (COM)** contains parameters that are used to support a communications option board when installed. This group will not appear unless an option board requiring parameter support is installed on the drive.
- The **Application Parameter Group (APP)** contains parameters that are used to set up customer applications requiring the use of the PID loops in the drive. Additional parameters are included to manage the operation of a second motor with the drive utilizing a separate group of motor parameters.
- The **Extension Parameter Group (EXT)** contains parameters that support extension option boards. This group will not appear unless an option board requiring parameter support is installed on the drive.

7.2 Basic Group Parameters

Table 7-1 Basic Group Parameters

Group	Number (LCD Display) Selection (Value)	Description
BAS	**BAS-00 (Jump Code)**	Default: 1 Range: 1-12
		Jump to Desired Code Sets the code to which to jump within the Basic group. Used for frequent access. Used to facilitate quicker access to a desired parameter.
		See Also: N/A
	BAS-01 (Motor-HP)	Default: Varies based on voltage and frame size of the inverter. Range: 1-700 HP
		Motor Nameplate HP Gathered from motor nameplate - select horsepower (HP) value here.
		See Also: BAS-02, BAS-03, BAS-04, BAS-05
	BAS-02 (MotorNP Volt)	Default: Varies based on the voltage of the inverter. Range: 0 to 600[V]
		Motor Nameplate Voltage Gathered from motor nameplate - enter motor voltage (V) here.
		See Also: BAS-01, BAS-03, BAS-04, BAS-05
	BAS-03 (MotorBase Hz)	Default: 230V, 460V and 600V inverters=60Hz (Note: 600V - **V2.0 only**) 380V inverters=50Hz Range: 30 to 120[Hz]
		Motor Nameplate Base Frequency Gathered from motor nameplate - Enter base frequency (Hz) here.
		See Also: BAS-01, BAS-02, BAS-04, BAS-05
	BAS-04 (MotorNP Curr)	Default: Varies based on voltage and frame size of the inverter. Range: 1.0 to 999.9[A]
		Motor Nameplate Current Gathered from motor nameplate - Enter full load motor nameplate amps (FLA) here.
		See Also: BAS-01, BAS-02, BAS-03, BAS-05

Table 7-1 Basic Group Parameters Continued

Group	Number (LCD Display) Selection (Value)	Description
BAS	**BAS-05 (MotorBaseRPM)**	Default: Varies based on voltage and frame size of the inverter. Range: 500 to 3600[RPM]
		Motor Nameplate RPM Gathered from motor nameplate - Enter motor base RPM here.
		See Also: BAS-01, BAS-02, BAS-03, BAS-04
	BAS-06 (Min Freq)	Default: 0.50[Hz] Range: FN1-32 to BAS-07[Hz]
		Minimum Frequency Application specific - determine minimum motor speed in frequency (Hz). Enter value here.
		See Also: BAS-07, FN1-32
	BAS-07 (Max Freq)	Default: 230V, 460V and 600V inverters=60.00Hz (Note: 600V - **V2.0 only**) 380V inverters=50.00Hz Range: BAS-06 to 120.00[Hz]
		Maximum Frequency Application specific -- determine maximum motor speed in frequency (Hz). Enter value here.
		See Also: BAS-06
	BAS-08 (Start Source)	Default: Keypad
	Keypad	Start/Stop by keypad control
	3Wire Cntl	Start/Stop by use of digital inputs M5, M7, M8
	2Wire Cntl	Start/Stop by use of digital inputs M5, M7 or M8
	Int.485	Start/Stop by network communication
		Start/Stop Source Application specific - from what control source will your drive be controlled? Enter control source here.
		See Also: BAS-09, I/O-20 to I/O-27
	BAS-09 (SpdRefSource)	Default: Keypad-1
	Keypad-1	Speed reference from keypad
	0 to +10V	Speed reference from analog input signal
	-10V to +10V	Speed reference from analog input signal
	4 to 20mA	Speed reference from analog input signal
	Sum of 0-10V and 4-20mA	Speed reference from analog input signal
	Pulse	Speed reference from pulse input signal
	Int485	Speed reference from network communication
	ExtPID	Speed reference from PID reference signal
		Speed Reference Source Application specific -- from what speed reference will the drive's speed be controlled? Select that speed reference source here.
		See Also: BAS-08, I/O-01 to I/O-19

Table 7-1 Basic Group Parameters Continued

Group	Number (LCD Display) Selection (Value)	Description
BAS	**BAS-10 (Accel Time)**	Default: 7.5 to 125HP=20.0[sec]; 150 to 700HP=60.0[sec] Range: 0 to 6000[sec]
		Acceleration Time The inverter targets the speed reference when accelerating or decelerating. When reference frequency for Accel and Decel (FN1-73) is set to “Maximum Frequency”, the acceleration time is the time taken by the motor to reach maximum frequency from 0 Hz. When FN1-73 is set to “Delta Frequency”, the acceleration and deceleration time is the time taken to reach a target frequency (instead the maximum frequency) from the previous frequency setting. The acceleration and deceleration time can be changed to a preset time via programmable digital inputs. By setting M1 to M8 to “XCEL-L”, “XCEL-M”, “XCEL-H” respectively, the 1 to 7 Accel and Decel time set in I/O-50 to I/O-63 are selected by the binary inputs of the M1 to M8. NOTE: Set the Accel time for more than 0.5 sec for smooth acceleration. Setting it for too short a time period may cause sub-optimal starting performance.
		See Also: BAS-11, FN1-02, FN1-04, FN1-05, FN1-73
	BAS-11 (Decel Time)	Default: 7.5 to 125HP=30.0[sec]; 150 to 700HP=90.0[sec] Range: 0 to 6000[sec]
		Deceleration Time The deceleration time is the time taken by the motor to reach 0 Hz from BAS-07 [Maximum Frequency]. Refer to BAS-10 for additional information.
		See Also: BAS-10, FN1-03 to FN1-05, FN1-73
	BAS-12 (Stop Mode)	Default: Ramp
	Ramp	Inverter stops by the deceleration pattern.
	Coast	Inverter cuts off its output immediately when the stop signal is given
	DC Brake	Inverter stops with DC injection braking. Inverter outputs DC voltage when the frequency reaches the DC injection braking frequency during deceleration.
	Flux-Brake	Fast stop converts the regenerating energy into heat at the motor.
		Stop Mode Sets the stopping method for the inverter. 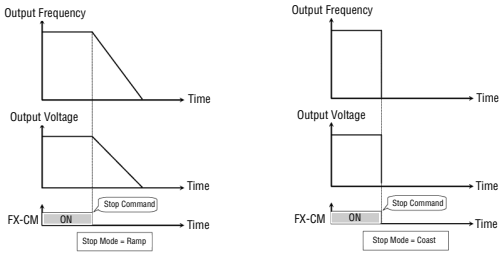 NOTE: The motor may be overheated by frequent use of the Flux Brake function. NOTE: Motor movement may continue due to motor/load inertia. Coast down time is application/load specific.
		See Also: N/A

Table 7-1 Basic Group Parameters Continued

Group	Number (LCD Display) Selection (Value)	Description
BAS	**BAS-20 (StartStop Hz) - V2.5 only**	Default: 0.00 Hz (Disable) Range: 0.5 to Max. Freq.
		Start/Stop Hz Start/Stop is based on Analog Input Frequency Reference. BAS-09 must be in 0-10V or 4-20mA only. Only functions in 2-wire control when a valid “Run” command is present, activated by entering a non-zero value. Do not use in conjunction with Preset Speed Control.
		See Also: BAS-08, BAS-09
	BAS-21 (StopFreq Band) - V2.5 only	Default: 0.50 Hz Range: 0.5 to Start/Stop Hz
		Stop Frequency Band Allows a bandwidth around BAS-20 selection for more stable control.
		See Also: N/A

7.3 Drive Group Parameters

Table 7-2 Drive Group Parameters

Group	Number (LCD Display) Selection (Value)	Description
DRV	**DRV-00 (Jump Code)**	Default: 1 Range: 1 - 92
		Jump to Desired Code Sets the code to which to jump within the Drive group. Used for frequent access. Used to facilitate quicker access to a desired parameter.
		See Also: N/A
	DRV-05 (PreSetSpd 1)	Default: 10.00[Hz] Range: 0.00 to BAS-07[Hz]
		Preset Speed 1 Sets Multi-step frequency 1 during operation. The inverter outputs preset frequencies set in parameters DRV-05 to 07 according to the Programmable Digital Input terminals configured as “speed-L”, “speed-M”, “speed-H” and “speed-X”. The output frequencies are determined by the binary combination of M1 to M8 as shown in the table above. The frequency setting method of “speed 0” is determined by BAS-09. See I/O-31 to 42 descriptions for preset speeds 4 to 15. Reference Table 8-8.

Binary Input Combination			Output Freq	Preset Speed
Speed-H	Speed-M	Speed-L		
0	0	0	Speed Setpoint	Speed 0
0	0	1	DRV-05	1
0	1	0	DRV-06	2
0	1	1	DRV-07	3

		See Also: DRV-06, DRV-07, I/O-20 to I/O-27, I/O-31 to I/O-42
	DRV-06 (PreSetSpd 2)	Default: 20.00[Hz] Range: 0.00 to BAS-07[Hz]
		Preset Speed 2 Sets Preset Speed 2 during operation. Refer to DRV-05 for additional information.
		See Also: DRV-05, DRV-07, I/O-20 to I/O-27, I/O-31 to I/O-42
	DRV-07 (PreSetSpd 3)	Default: 30.00[Hz] Range: 0.00 to BAS-07[Hz]
		Preset Speed 3 Sets PreSet Speed 3 during operation. Refer to DRV-05 for additional information.
		See Also: DRV-05, DRV-06, I/O-20 to I/O-27, I/O-31 to I/O-42
	DRV-08 (Current)	Default: Read Only Range: N/A [A]
		Output Current This code displays the output current of the inverter in RMS Amps.
		See Also: N/A

Table 7-2 Drive Group Parameters Continued

Group	Number (LCD Display) Selection (Value)	Description
DRV	**DRV-09 (Speed)**	Default: Read Only Range: N/A [rpm]
		Motor Speed Displays the motor speed in RPM while the motor is running. Use the following equation to scale the mechanical speed using FN2-47 [Gain for Motor Speed display] if you want to change the motor speed display to rotation speed (r/min) or mechanical speed (m/min). Where: Motor Speed = 120 x (f/P) x FN2-47 f = Output Frequency P = Number of Motor Poles
		See Also: FN2-47
	DRV-10 (Bus Voltage)	Default: Read Only Range: N/A [V]
		DC Link Voltage Displays internal DC link voltage for the inverter in DC volts.
		See Also: N/A
	DRV-12 (Fault)	Default: Read Only
	LCD Display	Fault (Trip)
	Over Current 1	Over-Current 1
	Over Voltage	Over-Voltage
	Ext. Trip	External Trip Input
	BX	Emergency Stop (Not Latched)
	Low Voltage	Low-Voltage
	Ground Fault	Ground Fault
	Over Heat	Over-Heat on Heat Sink
	E-Thermal	Electronic Thermal Trip
	Over Load	Over-Load Trip
	HW-Diag	Inverter H/W Fault - EEP Error - ADC Offset - WDOG Error - In-Phase Open
	Over Current 2	Over-Current 2
	Phase Open	Output Phase Loss
	Inv. OLT	Inverter Over-Load

Table 7-2 Drive Group Parameters Continued

Group	Number (LCD Display) Selection (Value)	Description
DRV	DRV-12 (Fault) Cont.	**Current Trip Display** This code displays the current fault (trip) status of the inverter. Press the ENTER key before pressing the STOP(RESET) key to check the fault content(s): output frequency, output current, and whether the inverter was accelerating, decelerating, or at speed at the time the fault occurred. Press the ENTER key to exit. The fault contents will be moved to FN2-01 to FN2-05 when the STOP(RESET) key is pressed. For more detail, refer to Chapter 9, Troubleshooting and Maintenance. NOTE: There are “WDOG error”, “EEP error”, “Input Phase Open” and “ADC Offset” faults for the inverter hardware. Inverter will not reset when a hardware fault occurs. Repair the fault before turning on the power. NOTE: Only the highest-level fault will be displayed when multiple faults occur. The rest of the faults can be monitored in FN2-01 to 05 [Fault history]. Cycle the power when the fault is cleared.
		See Also: FN2-01 to FN2-05
	DRV-15 (Ref Fbk Freq)	Default: Read Only Range: N/A
		Reference/Feedback Frequency Display Displays the Reference and Feedback while in PID mode. Units are selected in I/O-86. Range is set by I/O-87. Displayed only when APP-02 is set to “YES”.
		See Also: APP-02, I/O-86 to I/O-88
	DRV-16 (Speed Units)	Default: Hz
	Hz	Displays frequency
	RPM	Displays speed
		Speed Unit Selection Setting this parameter to Hz will display frequency [Hz]. Setting it to RPM will display speed [RPM].
		See Also: N/A
	DRV-17 (LCDTimeOut)	Default: 300[sec] Range: 0 to 1200[sec]
		Display Time-Out Sets the time period of keypad inactivity after which the display will automatically revert back to the monitor screens in the operation mode.
		See Also: N/A
	DRV-18 (PIDParameter)	Default: Read Only Range: N/A [Hz]
		PID Parameter Allows user to monitor PID controller’s reference/feedback value and inverter’s command/output frequency. Displayed only when “Yes” is selected in APP-02. Displays PID controller’s reference/feedback value and inverter’s command/output frequency. When APP-02 [PID operation selection] is set to “YES,” reference and feedback values are displayed in selected units and HZ. When APP-02 [PID operation selection] is set to “YES,” and APP-06 [PID feedback selection] is set (one of the I, V1, Pulse) and the desired unit is set in I/O-86 [V1 Unit Sel], I/O-87 [I Unit Sel], I/O-88 [PulseUnitSel] according to the selection in APP-06, PID reference and feedback value as well as Inverter command and output frequency will be displayed in percent [%] unit.
		See Also: APP-02

Table 7-2 Drive Group Parameters Continued

Group	Number (LCD Display) Selection (Value)	Description
DRV	**DRV-19 (AD Parameter)**	Default: Read Only Range: [N/A]
		AD Parameter Allows user to monitor the AD conversion value of Analog input. AD value of the Analog input used for Freq mode, PID or Ext. PID reference/feedback can be monitored here.
		See Also: N/A
	DRV-20 (EXT PID Para)	Default: Read Only Range: [N/A]
		EXT-PID Parameter Allows user to monitor Ext PID controller's reference/ feedback/ output value. Displayed only when APP-80 is set to "Yes". When APP-80 [Ext. PID operation selection] is set to "YES," reference and feedback are displayed in Percent unit. When APP-02 [PID operation selection] is set to "YES," and APP-06 [PID feedback selection] is set (one of the I, V1, Pulse) and the desired unit is set in I/O-86 [V1 Unit Sel], I/O-87 [I Unit Sel], I/O-88 [PulseUnitSel] according to the selection in APP-06, PID reference and feedback value will be displayed by percent [%] unit.
		See Also: N/A
	DRV-22 (LocalRemKey)	Default: Cntl &RefStop
	Cntl&RefStop	Control & Reference from keypad - if drive is running when LOCAL/ REMOTE is pressed, drive stops
	Control Stop	Control only from keypad - if drive is running when LOCAL/ REMOTE is pressed, drive stops
	Ref Only	Reference only from keypad
	Cntl&Ref Run	Control & Reference from keypad - if drive is running when LOCAL/ REMOTE is pressed, drive continues to run
	Control Run	Control only from keypad - if drive is running when LOCAL/ REMOTE is pressed, drive continues to run
	Disable	LOCAL/REMOTE key is disabled
		Keypad Auto/Manual Selection - Control Source Select Allows user to select the capability of the LOCAL/REMOTE key on the keypad.
		See Also: N/A
	DRV-23 (KeyRefMode)	Default: Minimum Speed
	Minimum Speed	Minimum speed drive is set for
	Last Speed	Drive returns to last speed running at
	Preset Speed 1	Drive runs at Preset Speed 1 Value
	Stop	Drive will stop
	Fault	Drive will trip on a fault
		Keypad Removal Reference Mode When keypad is removed from drive, drive reference changes to what you select here or controls stopping or faulting the drive.
		See Also: N/A

Table 7-2 Drive Group Parameters Continued

Group	Number (LCD Display) Selection (Value)	Description
DRV	**DRV-91 (Drive Mode2)**	Default: 3Wire Cntl
	Keypad	Start/Stop by keypad control
	3Wire Cntl	Start/Stop by use of digital inputs M5, M7, M8
	2Wire Cntl	Start/Stop by use of digital inputs M5, M7 or M8
		Drive Mode 2 Used to select an alternate control mode via a digital input. Note: **Always available in V2.5.**
		See Also: N/A
	DRV-92 (Freq mode2)	Default: Keypad
	Keypad	Speed reference from keypad
	0 ~ +10V	Speed reference from analog input signal
	10V ~ +10V	Speed reference from analog input signal
	4 ~ 20mA	Speed reference from analog input signal
	0~10V+4~20mA	Speed reference from analog input signal
	Pulse	Speed reference from pulse input signal
		Frequency Mode 2 Used to select an alternate control mode via a digital input. Note: **Always available in V2.5.**
		See Also: N/A

7.4 Function Group 1 Parameters

Table 7-3 Function Group 1 Parameters

Group	Number (LCD Display) Selection (Value)	Description
FN1	**FN1-00 (Jump Code)**	Default: 1 Range: 1 - 81
		Jump to Desired Code Number within FN1 Group Sets the parameter number to which to jump within Function Group 1. Allows quick access to a desired parameter.
		See Also: N/A
	FN1-01 (RunPrevent)	Default: None
	None	No run prevention
	Forward Prevented	Drive cannot run in Forward direction
	Reverse Prevented	Drive cannot run in Reverse direction
		Run Prevention This function prevents operation of the motor in either reverse or forward direction. This function may be used for loads that rotate only in one direction such as fans and pumps.
		See Also: N/A
	FN1-02 (AccelPattern)	Default: Linear
	Linear	A general pattern for constant torque applications. (Factory default) 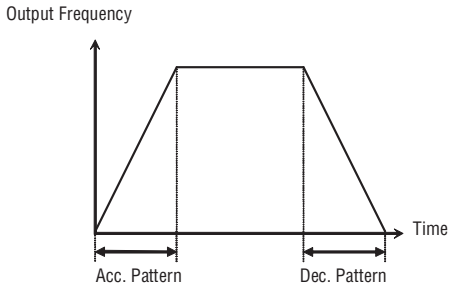 Accel/Decel Pattern: 'Linear'
	S-Curve	Allows the motor to accelerate and decelerate smoothly. The actual acceleration and deceleration time will be about 40% longer than the time set in BAS-10 and BAS-11 as shown in the figure at right. Lessens shock during acceleration and deceleration, and prevents objects from sliding on conveyors or other moving equipment. 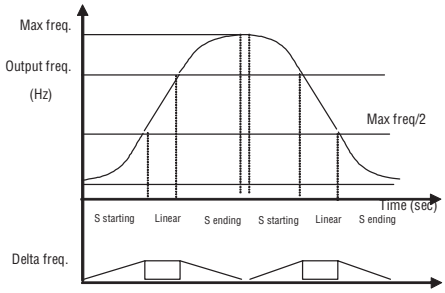 Accel/Decel Pattern: 'S-curve'

Table 7-3 Function Group 1 Parameters Continued

Group	Number (LCD Display)	Selection (Value)	Description
FN1	FN1-02 (Cont.)	U-Curve	This pattern provides more efficient control of acceleration and deceleration in typical winding machine applications. 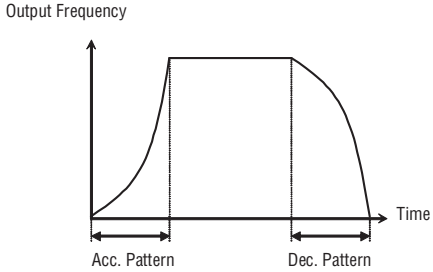 Accel/Decel Pattern: 'U-curve'
			Acceleration Pattern Used to define the shape of the acceleration ramp. Actual accel time = Preset accel time + Preset accel time *Starting curve percent/2 + Preset accel time * Ending curve percent/2. Actual decel time = Preset decel time + Preset decel time * Starting Curve percent/2 + Preset decel time * Ending curve percent/2.
			See Also: N/A
	FN1-03 (DecelPattern)		Default: Linear
		Linear	A general pattern for constant torque applications
		S-Curve	Allows the motor to decelerate smoothly
		U-Curve	Allows more efficient control of deceleration in winding machine applications
			Deceleration Pattern Sets the Deceleration Pattern. See FN1-02 [Acceleration Pattern] for additional information.
			See Also: N/A
	FN1-04 (Start SCurve)		Default: 50% Range: 1-100[%]
			Start Curve for S-Curve Accel/Decel Pattern Sets the percent of the ramp value used to form a curve at the start of the acccel/decel cycle. Setting to a higher value decreases the linear zone. Displayed only when FN1-02 or FN1-03 is set to [S-Curve].
			See Also: N/A
	FN1-05 (End SCurve)		Default: 50 Range: 1-100[%]
			End Curve for S-Curve Accel/Decel Pattern Sets the percent of the ramp value used to form a curve at the start of the acccel/decel cycle. Setting to a higher value decreases the linear zone.Displayed only when FN1-02 or FN1-03 is set to [S-Curve].
			See Also: N/A

Table 7-3 Function Group 1 Parameters Continued

Group	Number (LCD Display) Selection (Value)	Description
FN1	**FN1-10 (Pre-HeatMode) - V1 & V2.5 only**	Default: No
	No	Pre-heat function is not activated
	Yes	Pre-heat function is activated
		Pre-Heat This function prevents condensation from forming inside a stopped motor in a humid area by supplying DC current to the motor continuously. Pre-heat function is activated when FN1-10 [Pre-Heat] is set to “YES”, one of the Programmable digital input terminals in I/O-20 to 27 set to “Pre-Heat”and the defined terminal is turned ON. It is only active when the motor is stopped. NOTE: Parameter change is disabled during pre-heat function. Remove the pre-heat enable command from the digital input to allow programming.
		See Also: FN1-11, FN1-12, I/O-20, I/O-27
	FN1-11 (PreHeatLevel) - V1 & V2.5 only	Default: 30 [%] Range: 1 to 50 [%]
		Pre-Heat Value Set as a percentage of motor rated current. Displayed only when FN1-10 is set to “YES”.
		See Also: FN1-10, I/O-20 -1/O-27, FN1-12
	FN1-12 (Pre-HeatPerc) - V1 & V2.5 only	Default: 50 [%] - **V2.5** 100 [%] **- V1** Range: 1 to 100 [%]
		Pre-Heat Duty Cycle Sets the percentage of time for a 10 second period that current is supplied to the motor. A 100% setting, DC current is continuously supplied to the motor. Will only be displayed when FN1-10 is set to “YES”. NOTE: Reduce FN1-11 [Pre-heat value] or FN2-12 [Pre-heat duty] when inverter or motor is overheated.
		See Also: FN1-10, FN1-11, I/O-20 -1/O-27
	FN1-20 (Start Mode)	Default: Accel
	Accel	Drive accelerates to commanded speed immediately upon receiving a run command
	DC Start	Drive initially applies a DC current to the motor and then accelerates to commanded speed upon receiving a run command
	Flying-Start	Used to start the drive into a rotating load and then accelerate it to the commanded speed
		Start Mode Sets the starting method of the inverter. NOTE: When using the flying Start setting, performance is improved when the commanded direction is equivalent to the direction that the load is rotating. If the rotational speed of the load is less than 50% of rated RPM, the flying-start feature will work properly even if the rotational direction is opposite from the commanded direction. NOTE: DC-start is disabled when FN1-21 or 22 is set to “0”. NOTE: DC-start is de-activated in Sensorless mode. NOTE: The drive may trip with the fault “No Motor Trip” if there is an output phase loss during the DC-Start.
		See Also: FN1-21, FN1-22

Table 7-3 Function Group 1 Parameters Continued

Group	Number (LCD Display) Selection (Value)	Description
FN1	FN1-21 (DCBrkStrtTm)	Default: 0.0 Range: 0.0 - 60.0[sec]
		Starting DC Injection Braking Time Sets the duration of the time that DC current is applied to the motor prior to acceleration. Displayed only when FN1-20 is set to DC-Start.
		See Also: FN1-20, FN1-22
	FN1-22 (DC StrtValue)	Default: 50% Range: 0-150[%]
		Starting DC injection Braking Value Sets the amount of DC Current applied to the motor in percent of BAS-04 [Motor Nameplate Current]. Displayed only when FN1-20 is set to "DC-Start". NOTE: Do not set FN1-22 [Starting DC Magnetizing Value] higher than Inverter Rated Current;otherwise, Motor Overheating or Overload Trip may occur. Refer to FN1-21 for additional information on DC-Braking.
		See Also: FN1-20, FN1-21
	FN1-24 (DCbrkDlyTim)	Default: 0.10[sec] Range: 0.10 to 60.00 [sec]
		DC Injection Braking On-Delay Time Sets a delay time after the output reaches the DC injection braking frequency before beginning DC current injection. Displayed only when BAS-12 is set to "DC Brake".
		See Also: BAS-12, FN1-25, FN1-26, FN1-27
	FN1-25 (DC Brk Hz)	Default: 5.00[Hz] Range: 0.10 to 60.00 [Hz]
		DC Injection Braking Frequency Sets the frequency at which the inverter starts to output DC voltage during deceleration. Displayed only when BAS-12 is set to "DC Brake". When BAS-12 [Stop mode] is set to "DC Brake", the inverter decelerates until this level is reached and then begins DC Braking. By introducing a DC voltage to the motor windings, this function will stop the motor more abruptly. 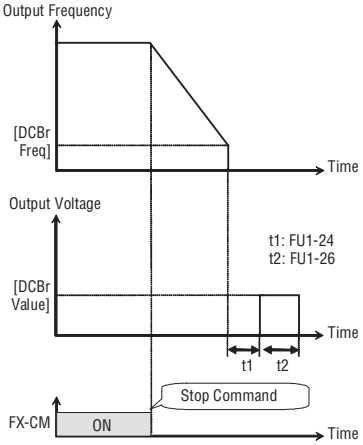 See Also: BAS-12, FN1-24, FN1-26, FN1-27

Table 7-3 Function Group 1 Parameters Continued

Group	Number (LCD Display) Selection (Value)	Description
FN1	**FN1-26 (DC Brk Time)**	Default: 1.0[sec] Range: 0.0 to 60.0 [sec]
		DC Injection Braking Time Sets the time that DC current is applied to the motor. Displayed only when BAS-12 is set to “DC Brake”.
		See Also: BAS-12, FN1-24, FN1-25, FN1-27
	FN1-27 (DC Brk Value)	Default: 50% Range: 0-200[%]
		DC Injection Braking Value Sets the level of DC current applied to the motor. set as a percentage of BAS-04 [Motor Nameplate Current]. Displayed only when BAS-12 is set to “DC Brake”. NOTE: To optimize DC injection braking functionality, set FN1-25 less than or equal to 5Hz. NOTE: Do not set this value higher than Inverter rated current; doing so may lead to motor overheating or an overload trip.
		See Also: BAS-12, FN1-24, FN1-25, FN1-26
	FN1-28 (Safety Stop)	Default: No
	No	Safety stop is inactive
	Yes	Safety stop is active
		Safety Stop This function is used to safely stop a high inertia load when there is a power outage. The rotational energy in the load is used to keep the drive energized by regenerating energy from the load to the DC bus of the drive. If a power failure occurs while Safety Stop is active, the inverter will decelerate the load at a rate necessary to maintain the DC bus voltage at the proper level during the stop. The deceleration time will depend upon the connected inertia. Should the Safety Stop function not operate optimally for the connected inertia, then FN2-46 [Inertia Rate] may need adjusting. If the inertia is too large, the drive may trip while attempting a Safety Stop. For this situation, incrementally adjust FN2-46 to a higher value until proper operation is achieved. NOTE: This function is effective for high inertia loads that may have excessive coast times should there be a power failure.
		See Also: FN2-46
	FN1-29 (Line Freq)	Default: 60.00[Hz] Range: 40.00 to 120.00[Hz]
		Power Source Frequency Sets input power frequency. NOTE: If line frequency is changed, related frequencies such as Max frequency and Base frequency are automatically changed. To set the related frequencies differently from line frequency, the user should set each parameter manually.
		See Also: N/A
	FN1-32 (Start Freq)	Default: 0.50[Hz] Range: 0.01-10.00[Hz]
		Starting Frequency Sets the frequency at which the inverter starts to output voltage. This parameter determines the absolute lowest operating frequency and sets the minimum allowable value for BAS-06 [Minimum Frequency].
		See Also: N/A

Table 7-3 Function Group 1 Parameters Continued

Group	Number (LCD Display) Selection (Value)	Description
FN1	**FN1-33 (Freq Limit)**	Default: Yes Range: N/A
		Frequency Limit Selection Indicates that BAS-06 and BAS-07 are in control of the minimum and maximum frequencies.
		See Also: N/A
	FN1-35 (F-Limit Hi)	Default: 60.00Hz Range: BAS-06 to BAS-07
		High Limit Frequency Reflects the value set in BAS-07 [Maximum Frequency]
		See Also: N/A
	FN1-40 (V/F Pattern)	Default: Linear
	Linear	Maintains a linear Volts/frequency ratio from zero to Base frequency. This is appropriate for constant torque applications. The performance will be improved with the use of FN2-67 to 69 [Torque boost].
		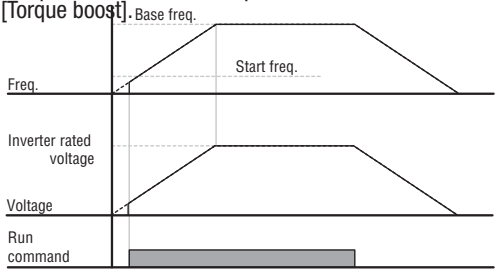
	Square	Used where variable torque is required. Maintains squared volts/hertz ratio. Appropriate applications are fans, pumps, etc.
		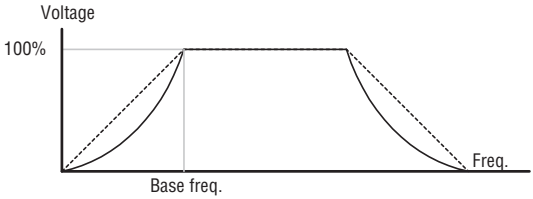

Table 7-3 Function Group 1 Parameters Continued

Group	Number (LCD Display) Selection (Value)	Description
FN1	**FN1-40 (V/F Pattern) Cont.** User V/F	Used for special applications. Users can adjust the volts/Hz ratio according to the application. This is accomplished by setting the voltage and frequency, respectively, at four points between starting frequency and base frequency. The four points of voltage and frequency are set in FN1-41 through FN1-48. 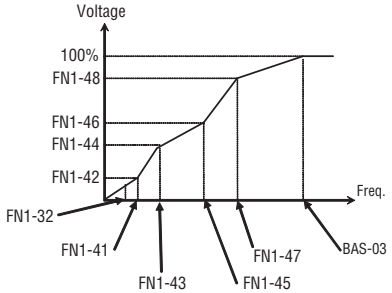
		Volts/Hz Pattern Sets the pattern of voltage/frequency ratio. Select the proper V/F pattern according to the load. The motor torque is dependent on this V/F pattern.
		See Also: N/A NOTE: When User V/F pattern is active, FN2-67[Forward Torque Boost] and FN2-68[Reverse Torque Boost] are deactivated. NOTE: When using a standard induction motor, setting the voltage/frequency (V/F) ratio value much higher than linear V/F pattern could result in torque shortage or motor overheating due to over-energizing.
	FN1-41 User V/F F1	Default: 15.00Hz Range: 0.00 to BAS-07[Hz]
		User V/F - Frequency 1 Sets Frequency 1 in User Defined V/F Pattern. Displayed only when “User V/F” is selected in FN1-40 [V/F pattern]. Users can make a custom V/F pattern by setting four points between FN1-32 [Starting Frequency] and BAS-03 [Motor Nameplate Base Frequency]. Values in lower-numbered parameters cannot be set higher than those in higher-numbered parameters.
		See Also: N/A
	FN1-42 (User V/F V1)	Default: 25% Range: 0-100[%]
		User V/F - Voltage 1 Sets Voltage 1 in User Defined V/F Pattern. Displayed only when “User V/F” is selected in FN1-40 [V/F pattern]. Set as a percentage in BAS-02 [Motor Nameplate Voltage]. Values in lower-numbered parameters cannot be set higher than those in higher-numbered parameters.
		See Also: N/A

Table 7-3 Function Group 1 Parameters Continued

Group	Number (LCD Display) Selection (Value)	Description
FN1	FN1-43 (User V/F F2)	Default: 30.00 Range: 0.00 to BAS-07[Hz]
		User V/F - Frequency 2 Sets Frequency 2 in User Defined V/F Pattern. Displayed only when "User V/F" is selected in FN1-40 [V/F pattern]. Users can make a custom V/F pattern by setting four points between FN1-32 [Starting Frequency] and BAS-03 [Motor Nameplate Base Frequency]. Values in lower-numbered parameters cannot be set higher than those in higher-numbered parameters.
		See Also: N/A
	FN1-44 (User V/F F3)	Default: 50[%] Range: 0-100[%]
		User V/F - Frequency 3 Sets Voltage 2 in User Defined V/F Pattern. Displayed only when "User V/F" is selected in FN1-40 [V/F pattern]. Set as a percentage in BAS-02 [Motor Nameplate Voltage]. Values in lower-numbered parameters cannot be set higher than those in higher-numbered parameters.
		See Also: N/A
	FN1-45 (User V/F F3)	Default: 45.00[Hz] Range: 0.00 to BAS-07[Hz]
		User V/F - Frequency 3 Sets Frequency 3 in User Defined V/F Pattern. Displayed only when "User V/F" is selected in FN1-40 [V/F pattern]. Users can make a custom V/F pattern by setting four points between FN1-32 [Starting Frequency] and BAS-03 [Motor Nameplate Base Frequency]. Values in lower-numbered parameters cannot be set higher than those in higher-numbered parameters.
		See Also: N/A
	FN1-46 (User V/F V3)	Default: 75% Range: 0-100[%]
		User V/F - Voltage 3 Sets Voltage 3 in User Defined V/F Pattern. Displayed only when "User V/F" is selected in FN1-40 [V/F pattern]. Set as a percentage in BAS-02 [Motor Nameplate Voltage]. Values in lower-numbered parameters cannot be set higher than those in higher-numbered parameters.
		See Also: N/A
	FN1-47 (User V/F F4)	Default: 60.00[Hz] Range: 0.00 to BAS-07[Hz]
		User V/F - Frequency 4 Sets Frequency 4 in User Defined V/F Pattern. Displayed only when "User V/F" is selected in FN1-40 [V/F pattern]. Users can make a custom V/F pattern by setting four points between FN1-32 [Starting Frequency] and BAS-03 [Motor Nameplate Base Frequency]. Values in lower-numbered parameters cannot be set higher than those in higher-numbered parameters.
		See Also: N/A

Table 7-3 Function Group 1 Parameters Continued

Group	Number (LCD Display) Selection (Value)	Description
FN1	FN1-48 (User V/F V4)	Default: 100[%] Range: 0-100[%]
		User V/F - Voltage 4 Sets Voltage 4 of User Defined V/F Pattern. Displayed only when "User V/F" is selected in FN1-40 [V/F pattern]. Set as a percentage in BAS-02[Motor Nameplate Voltage]. Values in lower-numbered parameters cannot be set higher than those in higher-numbered parameters.
		See Also: N/A
	FN1-49 (VAC 230.0V or VAC 460.0V or VAC 575.0V)	Default: 100[%] Range: 77.6 to 115.0[%]
		Input Voltage Adjustment This parameter is utilized when the input voltage to the inverter is different from the rated voltage of the inverter. The low voltage trip level is affected by this parameter. The setting of this parameter should only be changed when the input voltage fluctuates outside the allowable limits of the nominal voltage.
		See Also: N/A
	FN1-51 (Energy Save)	Default: None
	None	Energy Save mode disabled
	Manual	Energy Save ON by decreasing the output with the value set in FN1-52
	Auto	Energy Save ON automatically
		Energy Save Reduces the output voltage in applications that do not require high torque and current when operating at a steady state speed. The inverter reduces its output voltage after accelerating to the reference frequency. This function may cause over-current trips due to the lack of output torque with fluctuating loads. When Energy Save is ON, it may take longer to stop during deceleration.
		See Also: FN1-52
	FN1-52 (Manual Save%)	Default: 0% Range: 0-30[%]
		Manual Energy Saving% Sets the amount by which output voltage will be decreased according to load status. For fan or pump applications, energy consumption can be dramatically reduced by decreasing the output voltage when light or no load is connected. Displayed only when FN1-51 is set to [Manual].
		See Also: FN1-51
	FN1-54 (KiloWattHour)	Default: Read Only Range: N/A
		Integrating Wattmeter Displays both MWh and kWh. Example: 1500 kWh kWh can be read at 0x9336 and MWh can be read at 0x9335. Max Cumulative value is displayed in FN1-54 as shown below. Example: 9,999,999.9kWh NOTE: FN1-54 value may differ from the actual value due to the tolerances.
		See Also: N/A

Table 7-3 Function Group 1 Parameters Continued

Group	Number (LCD Display) Selection (Value)	Description
FN1	**FN1-55 (Drive Temp.)**	Default: Read Only Range: 0 to 160[°C]
		Inverter Temperature Displays IGBT's surface temperature.
		See Also: N/A
	FN1-56 (Motor Temp.)	Default: Read Only Range: 0 to 160[°C]
		Motor Temperature Displays motor temperature detected by external thermal sensor.
		See Also: N/A
	FN1-57 (No Motor Sel)	Default: No - **V1 & V2.5;** Yes - **V2**
	No	Function is disabled
	Yes	Function is active
		No Motor Selection This parameter is utilized to generate a trip when the output current is below the threshold set in parameter FN1-58 [Trip Current Level]. This may be useful in applications that utilize a contactor or disconnect between the drive and the motor. When this parameter is set to "Yes" and the output current remains less than the value set in FN1-58 for a longer period of time than that set in FN1-59, a HW-Diag Trip will occur displaying the message "No Motor Trip".
		See Also: N/A
	FN1-58 (NoMotorLevel)	Default: 25% Range: 5 to 100[%]
		Trip Current Level See FN1-57 for information regarding this parameter. Value is a percentage of BAS-04 [Motor nameplate Current].
		See Also: N/A
	FN1-59 (NoMotor Time)	Default: 5.0[sec] Range: 0.5 to 10.0[sec]
		Trip Time Setting See FN1-57 for information regarding this parameter.
		See Also: N/A
	FN1-60 (ETH Select)	Default: Yes
	No	
	Yes	
		Electronic Thermal Selection Protects the motor from overheating without using external thermal relay. Inverter calculates the temperature rise in the motor based on several parameters and determines whether or not the motor is overheated from excessive load current. Inverter will disable its output and display a trip message when the electronic thermal feature is activated.

Table 7-3 Function Group 1 Parameters Continued

Group	Number (LCD Display) Selection (Value)	Description
FN1	FN1-60 (ETH Select) Cont.	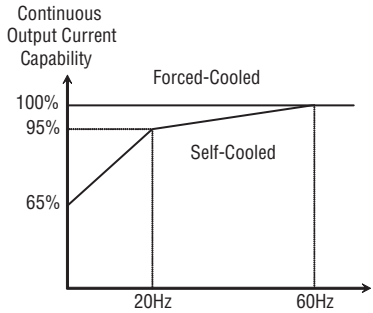 Activate the ETH parameters by setting this parameter to “Yes”. ETH level is set as a percentage of BAS-04 [Motor Nameplate Current]. 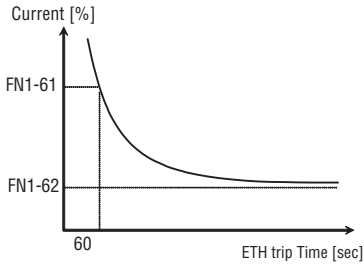
		See Also: N/A
FN1	FN1-61 (ETH 1min)	Default: 150[%] Range: FN1-62 to 200[%]
		Electronic Thermal Level for 1 Minute This is the reference current when the inverter determines the motor has overheated. For the default setting, a trip will occur when 150% of rated motor current in BAS-04 flows for one minute. Set as a percentage of BAS-04 [Motor Nameplate Current]. Sets the maximum level of current the motor can tolerate continuously for 1 minute. Cannot be set below FN1-62 [Electronic Thermal Level for Continuous]. Displayed only when FN1-60 is set to YES.
		See Also: N/A
	FN1-62 (ETH Cont)	Default: 120[%] Range: 50 to FN1-61(maximum 150)[%]
		Electronic Thermal Level for Continuous Operation This is the current at which the motor can run continuously. Generally, this value is set to “100%”, which means the motor rated current as set in BAS-04. This value must be less than FN1-61 [ETH 1min]. Set as a percentage of BAS-04 [Motor Nameplate Current]. Displayed only when FN1-60 is set to YES.
		See Also: N/A

Table 7-3 Function Group 1 Parameters Continued

Group	Number (LCD Display) Selection (Value)	Description
FN1	**FN1-63 (Motor Type)**	Default: Self-Cool
	Self-Cool	A motor that has a cooling fan connected directly to the shaft of the motor. The cooling effects of a self-cooled motor decrease when the motor is running at low speeds. The Motor heats easily when operating at low speed, compared to the motor at high speed with the same current. The motor current is derated as the motor speed decreases.
	Forced-Cool	A motor that uses a separate motor to power a cooling fan. As the motor speed changes, the cooling effect does not change. FN1-62 [Electronic thermal level for continuous] set value is utilized regardless of operating frequency.
		Characteristic Selection (Motor Type) To make the ETH function (Motor i2t) work correctly, the motor cooling method must be selected correctly according to the motor. NOTE: Even if the motor current changes frequently due to load fluctuation or acceleration and deceleration, the inverter calculates the I^2t and accumulates the value to protect the motor.
		See Also: N/A
	FN1-64 (OL Level)	Default: 110[%] Range: 30 to110[%]
		Overload Warning Level Sets the current level at which an alarm will signal at a relay or multi-function output terminal. (Reference FN1-65 and FN1-66). Set as a percentage of BAS-04 [Motor Rated Current]. A programmable digital output is used to annunciate an overload alarm. To make the overload alarm available, program one of the digital outputs defined in parameters I/O-76 to I/O-79 to a value of "OL". An alarm will be generated when the output current has exceeded this level for a period of time longer than that defined in parameter FN1-65 [Overload Warning Time]. If the current returns to a level below this threshold, then the digital output will deactivate following a period of time defined in FN1-65. 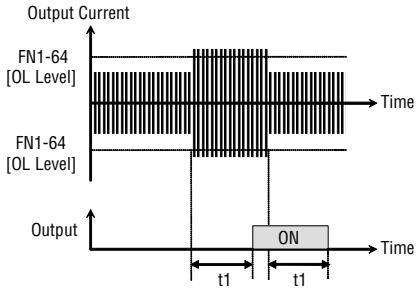 t1: FU1-65 [Overload Warning Time]
		See Also: N/A
	FN1-65 (OL Time)	Default: 10.0[sec] Range: 0.0 to 30.0[sec]
		Overload Warning Time Sets the amount of time a current over FN1-64 [Overload Warning Level] will be tolerated. After this time has elapsed, an alarm signal will be issued if Overload continues. See FN1-64 for additional information regarding this parameter.
		See Also: N/A

Table 7-3 Function Group 1 Parameters Continued

Group	Number (LCD Display) Selection (Value)	Description
FN1	**FN1-66 (OLT Select)**	Default: Yes
	No	Inverter will NOT be disabled
	Yes	Inverter WILL be disabled
		Overload Trip Selection Specifies whether or not the inverter will be disabled when the motor is overloaded. Inverter disables its output and displays a fault message when the output current exceeds FN1-67 [Overload Trip Level] for the time FN1-68 [Overload Trip Time]. Overload trip Operation is shown in the figure at right. This function protects the inverter and motor from abnormal load conditions. 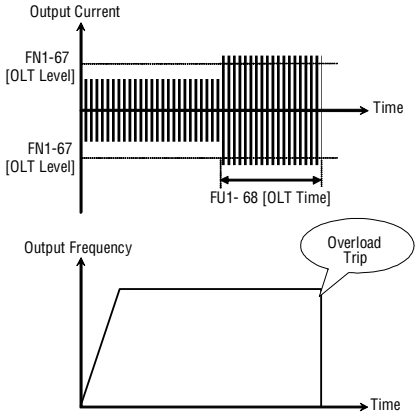
		See Also: N/A
	FN1-67 (OLT Level)	Default: 150[%] Range: 30-150[%]
		Overload Trip Level Sets the level of current required to trigger an overload trip. Displayed only when FN1-66 is set to “Yes”. Set as a percentage of BAS-04 [Motor Nameplate Current].
		See Also: N/A
	FN1-68 (OLT Time)	Default: 60.0[sec] Range: 0.0 to 60.0[sec]
		Overload Trip Delay Time Sets the amount of time a current over FN1-67 [Overload Trip Level] will be tolerated. After this time has elapsed, an overload trip will occur if Overload continues. Displayed only when FN1-66 is set to “Yes”.
		See Also: N/A

Table 7-3 Function Group 1 Parameters Continued

Group	Number (LCD Display) Selection (Value)	Description
FN1	**FN1-69 (PhaseLossSel)**	Default: 100 Range: 000 to 111 (Bit Set)

Bit 2	Bit 1	Bit 0	
0	0	1	Output phase loss protection enabled. Inverter output is shut down and stopped.
0	1	0	Input phase loss protection enabled. Inverter output is shut down and stopped.
1	0	0	Enabled at drive by-pass function
1	1	1	Enabled during All Conditions

Input/Output Phase Loss Protection
Used to disable the inverter output in case of phase loss in either input power or inverter output.

See Also: N/A

FN1-70 (Stall Prev.) - V1 only

Default: 000 (Bit)
Range: 000 to 111 (Bit Set)

Stall Prevention Mode Selection
Helps prevent motor stall by reducing the speed until the motor current decreases below the stall prevention level,
steady state speed, and deceleration by various bit combinations.

0	None.
1	Accel. Motor acceleration is stopped if current > FN1-71.
2	Steady State. Motor decelerates if current > FN1-71.
4	Decel. Motor deceleration is stopped if current > FN1-71.
7	On Always. Active during All Conditions.

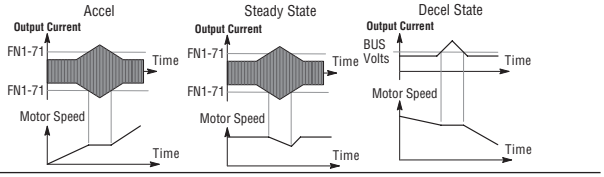

See Also: N/A

FN1-71 (Stall Level)

Default: 110[%]
Range: 30-150[%]

Stall Prevention Level
Sets the current level required to activate stall preventin function during Accel, Steady State or Decel. Set as a percentage of BAS-04 [Motor Nameplate Current]. Do not
set this value higher than the inverter's rated current. NOTE: Stall level will be automatically reduced if inverter is operated at a frequency higher than the base frequency.

See Also: N/A

Table 7-3 Function Group 1 Parameters Continued

Group	Number (LCD Display) Selection (Value)	Description
FN1	FN1-72 (Acc/Dec Ch F)	Default: 0[Hz] Range: 0 to BAS-07[Hz]
		Accel/Decel Change Frequency This function is used to change Accel/Decel ramp at a certain frequency. This is useful in textile machine applications. For example, when stop command is activated while running at 100Hz, inverter swiftly decelerates and changes the ramp at this frequency, leading to soft stop. NOTE: If Accel/Decel change frequency is set and "XCEL-L", XCEL-M", and XCEL-H" defined in Programmable digital terminals are ON, MultiAccel/Decel operation has the priority. 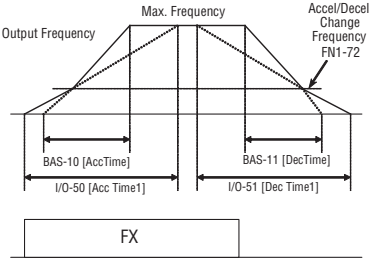
		See Also: N/A
	FN1-73 (Acc/Dec Freq)	Default: Max Freq
	Max Freq	Based on Max Frequency
	Delta Freq	Based on the change in commanded Frequency
		Reference Frequency for Accel and Decel Sets the reference frequency for acceleration and deceleration. If a pre-determined Accel/Decel time from a frequency to a target frequency is required, set this parameter to "Delta freq". **Max freq:** The Accel/Decel time is the time that it takes to reach the maximum frequency from 0 Hz. 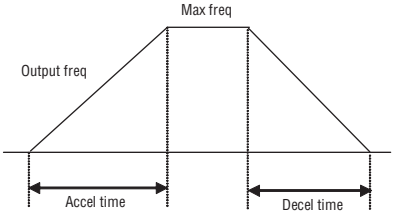 FN1-73 is set to Max. Freq **Delta freq:** The Accel/Decel time is the time that it takes to reach a target frequency from a previous frequency. 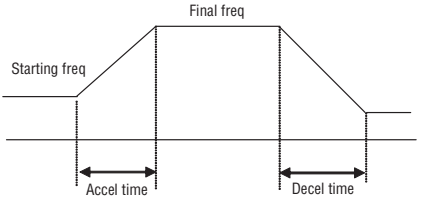 FN1-73 is set to Delta Freq
		See Also: N/A

Table 7-3 Function Group 1 Parameters Continued

Group	Number (LCD Display) Selection (Value)	Description
FN1	**FN1-74 (Time Scale)**	Default: 0.1 sec
	0.01 Sec	Can be adjusted in increments of 0.01 second
	0.1 Sec	Can be adjusted in increments of 0.1 second
	1 Sec	Can be adjusted in increments of 1 second
		Accel/Decel Time Scale Sets the resolution and upper limit for Accel/Decel time settings. When scale is set to “0.01 sec”, Accel/Decel time is changed by 10 mSec increments. The maximum setting is 60 seconds. When scale is set to “[0.1 sec]”, Accel/Decel time is changed by 100 mSec increments. The maximum setting is 600 seconds. When scale is set to “1 sec”, Accel/Decel time is changed by 1 sec increments. The maximum setting “is 6000 seconds.
		See Also: N/A
	FN1-80 (UpDn Save Mode) - V2 & V2.5 only	Default: No
	No	Inactive
	Yes	Active
		Up Down Freq Save Mode If YES is selected, the drive will remember the frequency of the last operation and when the drive is restarted, the drive will operate the motor at that frequency. Applies only in E-Pot mode.
		See Also: FN1-81, I/O-20 to I/O-27
	FN1-81 (UpDn Save Freq) - V2 & V2.5 only	Default: Read Only Range: Start Frequency to 60HZ
		Up Down Save Freq Displays the saved frequency for the drive to return to if FN1-80 is set to YES.
		See Also: FN1-80
	FN1-85 (Ana Spd Band) - V2.5 only	Default: 0.10HZ Range: 0.00HZ - 10.00HZ
		Analog Speed Band Allows a deadband range to be set for variations in an Analog Input Signal.
		See Also: N/A
	FN1-90 (STOP Inertia) - V2 & V2.5 only	Default: 10 Range: 1 to 9999
		Safety STOP Inertia Rate This parameter is used to find a proper inertial value for safety STOP function. The suitable value can be found while lowering it when receiving an OV trip or raising an LV trip during safety STOP procedure. Note: FN1-28 Safety Stop must be set to “YES”.
		See Also: FN1-28

7.5 Function Group 2 Parameters

Table 7-4 Function Group 2 Parameters

Group	Number (LCD Display) Selection (Value)	Description
FN2	FN2-00 (Jump Code)	Default: 1 Range: 1-95
		Jump to Desired Code within FN2 Group Sets the code number to which to jump within Function Group 2. Allows quick access to a desired parameter.
		See Also: N/A
	FN2-01 (Last Trip-1)	Default: Read Only Range: N/A
		Last Trip 1 Stores information on the type of fault as well as the frequency, current and Accel/Decel status at the time of the fault. By pressing [ENTER] and [SEL] key, the frequency, current, and operational status at the time of the fault can be reviewed. When the fault condition is reset via the STOP/RST key on the keypad or using a digital input terminal, information displayed from DRV-12 will be moved to Last Trip-1. In addition, the previous fault info stored in Last Trip-1 will be automatically moved to Last Trip-2. Therefore, the most recent fault info will always be stored in Last Trip-1. Up to 5 faults can be saved in FN2-01 to 05 [Fault history]. The lowest numbered fault such as “Last trip 1” is the most recent. After pressing the [ENTER] key, use the [SEL] key to review the operation status at the time of the fault (Output freq., current, Accel/Decel/Constant Run) and fault type. Press the [ENT] key to escape.
		See Also: N/A
	FN2-02 (Last Trip-2)	Default: Read Only Range: N/A
		Last Trip 2 By pressing [ENTER] and [SEL] key, the frequency, current, and operational status at the time of the fault can be reviewed. Lowest Last Trip Number contains information on most recent fault. See Last Trip-1 for further information.
		See Also: N/A
	FN2-03 (Last Trip-3)	Default: Read Only Range: N/A
		Last Trip 3 By pressing [ENTER] and [SEL] key, the frequency, current, and operational status at the time of the fault can be reviewed. Lowest Last Trip Number contains information on most recent fault. See Last Trip-1 for further information.
		See Also: N/A
	FN2-04 (Last Trip-4)	Default: Read Only Range: N/A
		Last Trip 4 By pressing [ENTER] and [SEL] key, the frequency, current, and operational status at the time of the fault can be reviewed. Lowest Last Trip Number contains information on most recent fault. See Last Trip-1 for further information.
		See Also: N/A

Table 7-4 Function Group 2 Parameters Continued

Group	Number (LCD Display) Selection (Value)	Description
FN2	**FN2-05 (Last Trip-5)**	Default: Read Only Range: N/A
		Last Trip 5 By pressing [ENTER] and [SEL] key, the frequency, current, and operational status at the time of the fault can be reviewed. Lowest Last Trip Number contains information on most recent fault.
		See Also: FN2-01
	FN2-06 (ClrFaultLog)	Default: No
	No	Don't Clear
	Yes	Clear
		Erase Trips Clears all Fault History stored in Last Trip-1 through Last Trip-5.
		See Also: N/A
	FN2-07 (Dwell Time)	Default: 0.0[sec] Range: 0-10[sec]
		Dwell Time Sets the time for dwell operation. Setting this parameter to 0.0[sec] disables the dwell function.
		See Also: FN2-08
	FN2-08 (Dwell Freq)	Default: 5.00[Hz] Range: FN1-32 to BAS-07[Hz]
		Dwell Frequency If parameter FN2-07 is programmed to a non-zero value and then the drive is commanded to start at a frequency that is greater than that programmed in FN2-08, the drive will run at the frequency programmed in FN2-08 for the duration programmed in FN2-07 before accelerating to the final commanded frequency. NOTE: If the dwell time in parameter FN2-07 is programmed to 0 seconds, the dwell function is disabled and parameter FN2-08 will not be visible in the parameter list. NOTE: To avoid operational problems, do not set the dwell frequency in parameter FN2-08 greater than the final frequency. NOTE: The dwell function is not available in sensorless mode of operation. 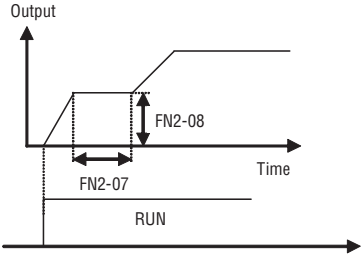
		See Also: N/A

Table 7-4 Function Group 2 Parameters Continued

Group	Number (LCD Display) Selection (Value)	Description
FN2	**FN2-10 (SkipFreqEnbl)**	Default: No
	No	
	Yes	
		Frequency Jump Selection Specifies whether or not certain frequencies will be jumped to help prevent undesirable resonance and vibration on the structure of the machine. Three different jump frequency ranges may be set. The frequencies will not be avoided during acceleration or deceleration, only during continuous operation. NOTE: When the reference frequency is set between the jump frequency low/high limit, the drive will run at the low limit frequency. NOTE: If any 2 ranges are overlapped, the lowest limit will establish the combined low limit. NOTE: Jump freq. is ignored during Accel/Decel. 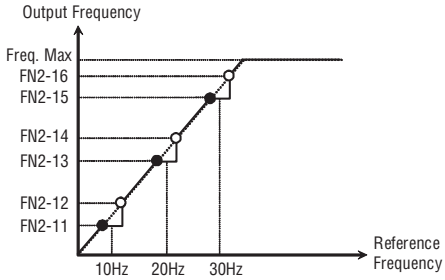
		See Also: N/A
	FN2-11 (Skip Freq1Lo)	Default: 10.00[Hz] Range: FN1-32 to FN2-12[Hz]
		Jump Frequency 1 Low Sets the lower limit of frequency range 1 to jump. Displayed only when FN2-10 is set to “Yes”.
		See Also: N/A
	FN2-12 (SkipFreq1Hi)	Default: 15.00[Hz] Range: FN2-11 to BAS-07[Hz]
		Jump Frequency High Limit 1 Sets the upper limit of frequency range 1 to jump. Displayed only when FN2-10 is set to “Yes”.
		See Also: N/A
	FN2-13 (SkipFreq2Lo)	Default: 20.00[Hz] Range: FN1-32 to FN2-14[Hz]
		Jump Frequency Low Limit 2 Sets the lower limit of frequency range 2 to jump. Displayed only when FN2-10 is set to “Yes”.
		See Also: N/A
	FN2-14 (SkipFreq2Hi)	Default: 25.00[Hz] Range: FN2-13 to BAS-07[Hz]
		Jump Frequency High Limit 2 Sets the upper limit of frequency range 2 to jump. Displayed only when FN2-10 is set to “Yes”.
		See Also: N/A

Table 7-3 Function Group 1 Parameters Continued

Group	Number (LCD Display) Selection (Value)	Description
FN2	FN2-15 (SkipFreq3Lo)	Default: 30.00[Hz] Range: FN1-32 to FN2-16[Hz]
		Jump Frequency Low Limit 3 Sets the lower limit of frequency range 3 to jump. Displayed only when FN2-10 is set to “Yes”.
		See Also: N/A
	FN2-16 (SkipFreq3Hi)	Default: 35.00[Hz] Range: FN2-15 to BAS-07[Hz]
		Jump Frequency High Limit 3 Sets the upper limit of frequency range 3 to jump. Displayed only when FN2-10 is set to “Yes”.
		See Also: N/A
	FN2-20 (Auto Restart)	Default: No
	No	Off (Motor will not start acceleration when power is applied)
	Yes	On (Motor will start acceleration when power is applied)
		Power ON Start Selection Specifies whether or not the drive will automatically start when power is applied to the drive if a digital input that is programmed as a run command is on at the time power is applied. With FN2-20 programmed to “No”, if the drive is running when a power outage occurs and a run command is present when power returns, then the run command must be cycled off and then back on in order to start the drive. When parameter FN2-20 is programmed to “Yes”, the drive will automatically restart when power is restored after a power outage as long as the digital input that is used to run the drive is enabled at the time power returns. This situation may cause the drive to restart into a rotating motor. See parameter FN2-22 to set up the drive for restarting under this condition. NOTE: If the FN2-20 is set to “Yes”, ensure that appropriate warnings are present at the motor and connected load to indicate that the drive may automatically start. 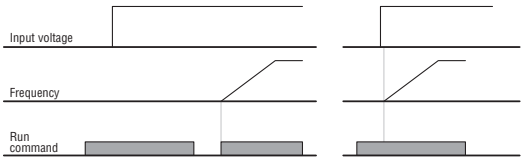 FN2-20 set to “NO” FN2-20 set to “YES” **WARNING: Caution must be exercised when this function is enabled as the motor will start to run automatically after AC input power is applied. Personal injury may result if caution is not exercised.**
		See Also: N/A

Table 7-3 Function Group 1 Parameters Continued

Group	Number (LCD Display) Selection (Value)	Description
FN2	**FN2-21 (FaultRestart)**	Default: No
	No	Off (Motor will not restart when fault condition is reset)
	Yes	On (Motor will restart when fault condition is reset)
		Restart After Fault Reset Selection Specifies whether the motor will automatically restart after a fault condition is reset while run command is on. If set to “No”, user must restart the inverter by cycling the run command after the fault has been reset. If set to “Yes”, inverter will restart after the RST (reset) terminal has reset a fault. If the motor is rotating at the time the fault is reset, the inverter may trip. To avoid this trip, use “Speed Search” function parameter FN2-22. 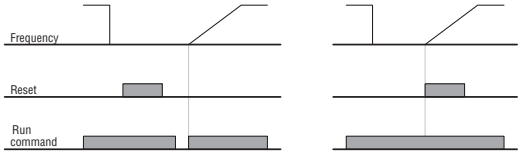 FN1-21 is set to “NO” FN1-21 is set to “YES” **WARNING: Caution must be exercised when the Restart After Fault Reset Selection function is enabled, as the motor will start to run automatically after the fault is reset. Personal injury may result if caution is not exercised.**
		See Also: N/A
	FN2-22 (IPF Mode) - V2 & V2.5 only	Default: No
	No	Auto Restart disabled
	Yes	Auto Restart active
		Interrupt Power Fault If this parameter is set to “YES,” it is used to automatically start the drive without tripping while the power is restored after an interrupt power fault. This function enables the inverter to Flying-Start in order to reach target frequency without tripping regardless of FN1-20 Starting Mode. Note: For safety reasons, the Run command only functions when FN2-20 is set to Auto Restart. If FN2-22 is set to “NO,” the Run command must be cycled off and then back on in order to start the drive.
		See Also: N/A

Table 7-3 Function Group 1 Parameters Continued

Group	Number (LCD Display) Selection (Value)	Description
FN2	**FN2-22 (FlyngStrtSel) - V1 only**	Default: 0000 (Bit) Range: 0000 to 1111 (Bit Set)
		Speed Search Selection Synchro Start P & I gains must be set for the load inertia and torque. Set FN2-46 to the correct value for optimum operation. Displayed only when FN2-21=1 or FN1-20=Yes. 2^3 2^2 2^1 2^0 Description 0 0 0 0 Speed Search not active. 0 0 0 1 During Accelerating. 0 0 1 0 During Auto Restart (FN2-21). 0 1 0 0 During Restart power failure. 1 0 0 0 At Power ON start (FN2-20=Yes). 1 1 1 1 During all conditions.
	0	None.
	1	During Accel. Speed search while Accelerating.
	2	After Fault.
	4	Restart. Speed search during Restart after temporary Power Failure.
	8	Power ON. Speed search when FN2-20 = Yes. Allows automatic restart after Power ON, Fault Reset, and temporary Power Failure without waiting for the motor to stop. Reduces trips when the inverter restarts with a rotating load.
	15	On Always. Speed search active during all conditions.
		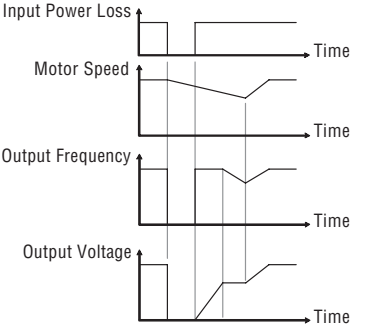
		See Also: N/A
	FN2-23 (FlyingStrtGn) - V2 & V2.5 only	Default: 50 Range: 30 to 160 [%]
		Gain During Speed Search Sets the Gain used for Speed Search PI Controller. Set this value according to load inertia set in FN2-46.
		See Also: N/A
	FN2-23 (FlyngStrtPGn) - V1 only	Default: 200 Range: 0-9999
		P Gain During Speed Search Sets the Proportional Gain used for Synchro Start PI Controller. Set this value according to load inertia set in FN2-46. Displayed only when FN2-22≠0 or FN1-20=1.
		See Also: N/A

Table 7-4 Function Group 2 Parameters

Group	Number (LCD Display) Selection (Value)	Description
FN2	**FN2-24 (Search Type) - V2 & V2.5 only**	Default: Estimated SS
	Estimated SS	Estimated Speed Search
	Real SS	Real Speed Search
		Speed Search Type Selection This function is used to select current gain during speed search when setting is Estimated SS. Set this value in % according to BAS-04 Motor Nameplate Current. This function is used to permit automatic restarting after Power On Fault Reset and IPF without waiting for the motor to stop. FN2-46 Load Inertia must be set at correct value.
		See Also: N/A
	FN2-24 (FlyngStrtIGn) - V1 only	Default: 500 Range: 0-9999
		I Gain During Speed Search Sets the Integral Gain used for Synchro Start PI Controller. Note: If I gain is set too high, Overshoot may occur and lead to OV Trip. Displayed only when FN2-22≠0 or FN1-20=1.
		See Also: N/A
	FN2-25 (RestartTries)	Default: 0 Range: 0-10
		Number of Auto-Restart Tries Allows a tripped drive to automatically reset itself after a fault thus making provisions for automatic restart. The number of retries is set in parameter FN2-25 and the delay before attempting the fault reset and restart of the drive is programmed in FN2-26. Should the reset/restart attempts exceed the number programmed in FN2-25, then the drive will latch the fault, display an appropriate fault message and prohibit an automatic restart. If the application is such that the motor will still be rotating when the restart occurs, then the speed search function in parameter FN2-22 should be utilized. The automatic restart function will be disabled when a low voltage trip occurs or when the drive enable signal is removed.
		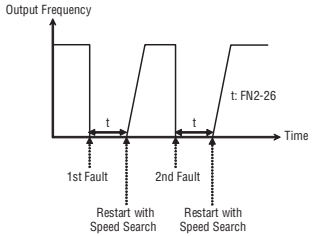 Note: Upon successful restart of the drive after a fault and then continuous operation for 30 seconds, the internal retry counter is increased by a count of 1; for each 30 second period of running after this, the counter is incremented until it is equal to the restart tries programmed in FN2-25. **WARNING: Caution must be exercised when the Number of Auto-Restart Tries is enabled, as the motor will start to run automatically after the fault is reset. Personal injury may result if caution is not exercised.**
		See Also: FN2-27

Table 7-4 Function Group 2 Parameters Continued

Group	Number (LCD Display) Selection (Value)	Description
FN2	FN2-26 (RestartDelay)	Default: 1.0[sec] Range: 0.0-60.0[sec]
		Delay Time Before Auto-Retry Sets the time between Auto-Restart tries. Displayed only when FN2-25 is set at 1 or above.
		See Also: FN2-25
	FN2-41 (Motor Poles)	Default: 4 Range: 2-12
		Number of Motor Poles Enter the number of poles for the motor. Used to display the motor speed. If you set this value to 2, inverter will display 3600 rpm instead of 1800 rpm at 60Hz output frequency. Caution should be exercised when sizing a drive for a motor with more than 4 poles to ensure that the motor full load amps does not exceed the continuous amp capability of the drive.
		See Also: N/A
	FN2-42 (Motor Slip RPM)	Default: Calculated [Hz] Range: 0.00 to 10.00
		Motor Slip Displays the calculated motor slip. Fs = Slip Frequency Fr = Rated Frequency RPM = Nameplate RPM P = Number of Poles Fs = Fr - ((RPM x P)/120)
		See Also: FN2-41, BAS-03, BAS-05
	FN2-44 (MotorMagCurr)	Default: Automatically set based on motor nameplate data Range: 0.5 to 999.9[A]
		No Load Motor Current (RMS) This parameter is to be set to the no load (magnetizing) amps of the motor. If the motor magnetizing amps are not known, then disconnect all loads (including gearing) from the motor shaft and run the motor in V/Hz mode at approximately 3/4 speed (e.g. 45 Hz for a 60 Hz motor) and then records the amps as indicated in the monitor display for motor amps. The value recorded should then be entered into FN2-44. The proper setting of this parameter is required to ensure optimum operation in sensorless mode of operation. NOTE: When setting the motor nameplate data in the basic (BAS) menu, FN2-44 as well as other motor related parameters is automatically defaulted to factory values. These values are appropriate for most applications but may need adjusting if performance needs to be optimized.
		See Also: N/A
	FN2-45 (Efficiency)	Default: Automatically set based on motor nameplate data Range: 70-100[%]
		Motor Efficiency Enter the motor efficiency from the motor nameplate. Parameter is automatically changed according to motor capacity. This value is used to calculate the output wattage displayed in the monitor screens.
		See Also: N/A

Table 7-4 Function Group 2 Parameters Continued

Group	Number (LCD Display) Selection (Value)	Description
FN2	**FN2-46 (Inertia Rate)**	Default: 1 - **V2 & V2.5;** 0 - **V1** Range: 1 to 40 - **V2 & V2.5;** 0 to 8 - **V1**
		Load Inertia Sets the load inertia rate. Used for sensorless control, Minimum Accel/Decel, Optimum Accel/Decel and Speed search. For optimal control performance, this value must be set correctly. Install a DB unit or regenerative converter to improve the performance. Set "0" for loads that have load inertia less than 10 times that of motor inertia. Set "1" for loads that have load inertia about 10 times that of motor inertia.
		See Also: N/A
	FN2-47 (RPMDisplayGn)	Default: 100% Range: 1 to 1000[%]
		Gain for Motor Speed Display Changes the motor speed display to rotating speed (r/min) or mechanical speed (e.g. ft/min). The display is calculated by the following equations. $\text{Rotating speed (r/min)} \frac{(120 \times f)}{P}$ Where: f = Output Frequency P = Number of Motor Poles Mechanical speed (ft/min) = Rotating speed x Motor RPS Display Gain [FN2-47]
		See Also: N/A

Table 7-4 Function Group 2 Parameters Continued

Group	Number (LCD Display) Selection (Value)	Description
FN2	FN2-48 (Carrier Freq)	Default: Varies based on size of inverter:

Inverter Size [HP]	Carrier Frequency Default [kHz]
7.5 to 30	5.0
40	5.0
50 to 100	4.0
125 to 350	3.0
400 to 700	2.0

Voltage Rating	Inverter Size[HP]	Carrier Frequency Default[kHz]
600V	7.5 to 150	3.0

Range: Varies based on size of inverter:

Inverter Size [HP]	Carrier Frequency Range [kHz]
7.5 to 30	2 to 15
40	2 to 10
50 to 100	2 to 4
125 to 350	2 to 3
400 to 700	1.5 to 2

Voltage Rating	Inverter Size[HP]	Carrier Frequency Range[kHz]
600V	7.5 to 15	0.7 to 10.0
	20 to 40	0.7 to 8.0
	50 to 100	0.7 to 4.0
	125 to 150	0.7 to 3.0

Carrier Frequency
Sets the carrier frequency for the PWM output.
Affects the audible sound of the motor, noise emission from the inverter, inverter temperature, and leakage current. If the ambient temperature where the inverter is installed is high, or other equipment may be affected by potential inverter noise, set this value lower. If the value is set above 10 kHz, reduce the rated current by 5% per 1 kHz. Setting Carrier frequency set below 1.5 [kHz] when FN2-60 [Control mode selection] is set to Sensorless can result in reduced performance.

See Also: N/A

Table 7-4 Function Group 2 Parameters Continued

Group	Number (LCD Display) Selection (Value)	Description
FN2	**FN2-49 (PWMTechnique) - V2 & V2.5 only**	Default: Normal
	Normal	Operation via Carrier (switching) frequency
	Low Leakage	Change (Carrier) switching frequency pattern to reduce leakage current
		PWM Type Selection Noise and leakage current can be reduced without changing carrier frequency by decreasing the switching cycle. “Low Leakage” is used to reduce Leakage current by decreasing switching cycle. Reducing the Carrier frequency may increase noise. NOTE: When Low leakage is selected while carrier frequency is set lower than 2.0 kHz in FN2-48, FN2-48 value is automatically set to 2.0 kHz.
		See Also: N/A
	FN2-49 (PWMTechnique) - V1 only	Default: 0
	0	STD PWM. Operation with basic Carrier (switching) frequency.
	1	Fixed PWM Operation with fixed Carrier (switching) frequency.
	2	PWM Low leakage (Change (Carrier) switching frequency pattern to reduce leakage current.)
		PWM Type Selection Noise and leakage current can be reduced without changing carrier frequency by decreasing the switching cycle. ”Normal 1” is the general PWM method while ”Normal 2” is the PWM method when low noise (low motor sound) is needed at motor starting. When Normal 1 is selected at motor starting, inverter changes switching frequency from low to set value. When Normal 2 is selected, inverter starts to operate at the set-value. ”Low Leakage” is used to reduce Leakage current by decreasing switching cycle. Reducing the Carrier frequency may increase noise. Note: When Low leakage is selected while FN2-48< 2.0 kHz, FN2-48 value is automatically adjusted to 2.0 kHz.
		See Also: N/A
	FN2-60 (Control Mode)	Default: V/F
	V/F	Volts/Frequency Control
	Slip Compen	Slip Compensation Control
	Sensorless	Sensorless Control
		Control Mode Selection Sets the control mode for the drive. V/F control: Controls the voltage/frequency ratio via the setting in parameter FN1-40. Use the torque boost function when a greater starting torque is required (see parameters FN2-67 to FN2-69). Slip compensation: Maintains constant motor speed. To keep the motor speed constant, the output frequency varies within the limit of slip frequency according to the load current. For example, when the motor speed decreases below the reference speed (frequency) due to a heavy load, the inverter increases the output frequency above the reference frequency to increase the motor speed. Sensorless Control: Refer to Chapter 8 “Customizing the Drive for your Application” for more information on this topic.
		See Also: N/A

Table 7-4 Function Group 2 Parameters Continued

Group	Number (LCD Display) Selection (Value)	Description
FN2	**FN2-61 (AutoTuneEnbl)**	Default: No
	NO	Parameters will NOT be automatically measured
	Static	Non-rotational tuning
		Auto-Tuning Selection The auto tuning function automatically measures the motor parameters needed for control selected in FN2-60 [Control mode] such as stator resistance, rotor resistance and leakage inductance. The rated current, voltage, and RPM from in the motor nameplate should be entered before performing auto tuning. Refer to Chapter 8 (Section 8.14) for more information.
		See Also: N/A
	FN2-62 (%Rs) - V2 & V2.5 only	Default: 4% Range: 0.00 to 99.99[%]
		Stator Resistance of Motor Automatically set during autotune or can be used to manually enter the stator resistance of the motor.
		See Also: N/A
	FN2-62 (%Rs) - V1 only	Default: Depends on BAS-01 Range: 0 to 99.99 ohm
		Stator Resistance of Motor Automatically set during autotune or can be used to manually enter the stator resistance of the motor.
		See Also: N/A
	FN2-63 (%Lsigma) - V2 & V2.5 only	Default: 12% Range: 0.0 to 999.9[%]
		Leakage Inductance of Motor Automatically set during autotune or can be used to manually enter the leakage inductance of the stator and rotor of the motor.
		See Also: N/A
	FN2-63 (%Lsigma) - V1 only	Default: Depends on BAS-01 Range: 0 to 999.9 mH
		Leakage Inductance of Motor The leakage inductance of the motor stator and rotor. Set manually or automatically measured and set during autotune.
		See Also: N/A

Table 7-4 Function Group 2 Parameters Continued

Group	Number (LCD Display) Selection (Value)	Description
FN2	**FN2-64 (PreEx Time)**	Default: 1.0[sec] Range: 0 to 60[sec]
		Pre-excitation Time When a run command is issued to the drive, the drive excites the motor with its magnetizing current at 0 Hz for the duration programmed in FN2-64 prior to accelerating the drive to its set frequency. Displayed only when FN2-60 is set to “Sensorless”. 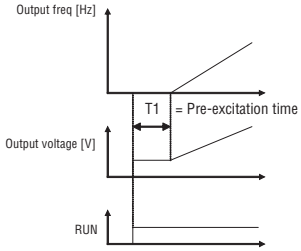
		See Also: N/A
	FN2-65 (SpdLoopPgain) - V1 only	Default: 1000 Range: 0 to 9999
		P Gain For Sensorless Control Sets the P Gain for the motor during Sensorless Vector Control. Larger value provides faster response but may cause instability. Lesser values provide slower response but improve stability. Note: The response time of a system is affected by the load inertia. For better control performance, set FN2-46 correctly. Displayed only when FN2-60=Sensorless.
		See Also: N/A
	FN2-66 (SpdLoopIgain) - V1 only	Default: 100 Range: 0 to 9999
		I Gain For Sensorless Control Sets the I Gain for the motor during Sensorless Vector Control. Lesser values provide better transient response characteristic and steady state characteristic. However, if this value is set too low, there may be an overshoot in speed control. Displayed only when FN2-60=Sensorless.
		See Also: N/A
	FN2-67 (Torque Boost)	Default: Manual
	Manual	Values set in FN2-68 [Forward torque boost] and FN2-69 [Reverse torque boost] are utilized.
	Auto	Inverter outputs high starting torque by automatically boosting torque between according to the load characteristic.
		Manual/AutoTorque Boost Selection Used to increase the starting torque at low speed by increasing the output voltage of the inverter. If the boost value is set higher than required, it may cause the motor flux to saturate, causing an over-current trip. Increase the boost value when there is excessive distance between inverter and motor to compensate for voltage drop in wiring. NOTE: When “2nd Func” is used on a digital input to select between two different motors, auto torque boost is applied to the 1st motor. Manual torque boost must be used for the 2nd motor.

Table 7-4 Function Group 2 Parameters Continued

Group	Number (LCD Display) Selection (Value)	Description
FN2	**FN2-67 (Torque Boost) Cont.**	NOTE: Auto torque boost is not available when FN2-60 [Control Mode] is set to “sensorless”. NOTE: Conduct Auto tuning in FN2-61 [Auto tuning] first to use Auto torque boost effectively. 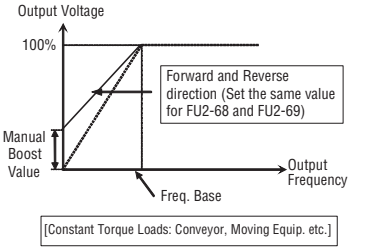 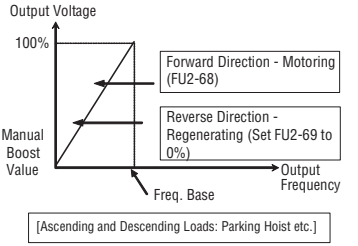 See Also: N/A
	FN2-68 (Fwd Boost)	Default: 2 (V1 and V2), 0 (V2.5) Range: 0-15[%] **Forward Torque Boost** Sets the level of torque boost applied to a motor during forward run. Set as a percentage of inverter rated voltage. NOTE: When FN1-40 [Volts/Hz Pattern] is set to “User V/F”, FN2-67 to 69 [Torque boost] is ignored. NOTE: Increase this value when the motor does not produce enough torque or inverter to motor wiring is excessive. If this value is set too high, Overcurrent trip may occur. NOTE: If the torque boost value is 0 when DC start is enabled, a “No Motor Trip” may occur. Caution: If the boost value is set too high, it may cause motor overheating or over saturation. 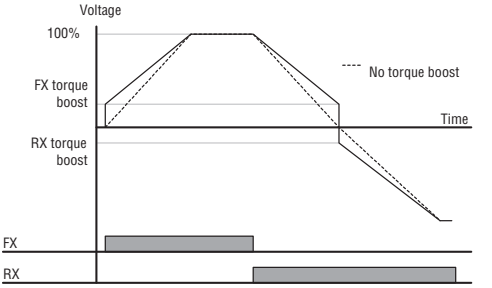 See Also: N/A

Table 7-4 Function Group 2 Parameters Continued

Group	Number (LCD Display) Selection (Value)	Description
FN2	**FN2-69 (Rev Boost)**	Default: 2 (V1 and V2), 0 (V2.5) Range: 0-15[%]
		Reverse Torque Boost Sets the level of torque boost applied to a motor during reverse run. Set as a percentage of inverter rated voltage. See FN2-68 [Forward Torque Boost] for additional information. **CAUTION: If the boost value is set too high, it may cause motor overheating or over saturation.**
		See Also: N/A
	FN2-80 (PowerOn Disp)	Default: 0
	0	SET FRQ OUT FRQ; In PID mode =PID REF/PID FBK
	1	MOT SPD MOT CUR
	2	MOT VTL L/R AT SPEED
	3	DC LINK OUT PWR
	4	D_In D_Out
	5	ANLG V IN ANLG I IN
	6	ANLG OUT 1 ANLG OUT 2
	7 - **V2 & V2.5 only**	AMP V RPM Hz
		Power-On Display Sets the parameters to be displayed on the keypad when power is first applied to the drive.
		See Also: Monitoring Display Parameters section 6.9
	FN2-82 (S/W Version)	Default: Read Only Range: Ver X.XX - X.X
		Software Version Displays the inverter software version (example 1.0 - 2.0).
		See Also: N/A
	FN2-83 (LastTripTime)	Default: N/A Range: X:XX:XX:XX:XX:X (Year:Month:Day:Hour:Minute)
		Last Trip Time Displays the time elapsed since last trip occurred. User can calculate the time of the last trip time from this value. Automatically reset when a trip occurs.
		See Also: N/A
	FN2-84 (PwrOn-Time)	Default: Read Only Range: X:XX:XX:XX:XX:X (Year:Month:Day:Hour:Minute)
		Power On Time Displays time since Power was turned ON. It is not reset automatically.
		See Also: N/A
	FN2-85 (Run-Time)	Default: Read Only Range: X:XX:XX:XX:XX:X (Year:Month:Day:Hour:Minute)
		Run Time Displays the amount of time that the drive has been run. It is not reset automatically.
		See Also: N/A

Table 7-4 Function Group 2 Parameters Continued

Group	Number (LCD Display) Selection (Value)	Description
FN2	**FN2-87 (%PowerSet)**	Default: 100.0[%] Range: 0.1 to 400.0[%]
		Power Set Used to scale the inverter output power displayed in FN1-54 [KiloWattHour].
		See Also: N/A
	FN2-90 (Para. Disp)	Default: Advanced
	Basic	Displays basic parameters
	Advanced	Displays all parameters
	Diff Para	Displays parameters set differently from factory setting
		Parameter Display Specifies which parameters are available to be viewed.
		See Also: N/A
	FN2-91 (Param. Read)	Default: No
	No	Inactive mode
	Yes	Parameters will be copied to keypad
		Read Parameter Setting the parameter to “Yes” causes the parameters to be copied from the drive to the keypad. This can be used to set the parameters of other drives equivalent to the setup in the original drive (see FN2-92). NOTE: Perform a parameter save using parameter FN2-95 prior to copying the parameters from the drive to the keypad.
		See Also: N/A
	FN2-92 (Param. Write)	Default: No
	No	Inactive mode
	Yes	Parameters will be copied to drive
		Write Parameter Setting this parameter to “Yes” causes the parameters to be copied from the keypad to the drive. This can be used to set the parameters of other drives equivalent to the setup in the original drive (see FN2-91). NOTE: After downloading parameters from the keypad to the drive, autotune should be executed if the drive is to operate in sensorless mode.
		See Also: N/A
	FN2-93 (FactorySet)	Default: No
	No	No initialization
	All Groups	All parameter groups are initialized back to factory defaults
	BAS	Only BAS Group is initialized
	DRV	Only Drive Group is initialized
	FN1	Only Function Group 1 is initialized
	FN2	Only Function Group 2 is initialized
	I/O	Only I/O Group is initialized

Table 7-4 Function Group 2 Parameters Continued

Group	Number (LCD Display) Selection (Value)	Description
FN2	**FN2-93 (FactorySet) Cont.**	
	EXT	Only EXT Group is initialized
	COM	Only COM Group is initialized
	APP	Only APP Group is initialized
		Initialize Parameters Initializes parameters back to factory default values. Each parameter group can be initialized separately. NOTE: Set BAS-01 through 05 [Motor parameters] again after this function. NOTE: Parameter initialization will not clear trip information. Instead, use FN2-06 [Erase trips].
		See Also: N/A
	FN2-94 (Param Lock)	Default: 0 Range: 0 to 9999
		Parameter Write Protection This function is used to prevent the parameters from being changed. When the parameters are locked, the display arrow changes from solid to dashed line.The lock and unlock code is “12”.
		See Also: N/A
	FN2-95 (Param Save)	Default: No
	No	Inactive mode
	Yes	Parameters saved
		Save Parameter Setting FN2-95 to “Yes” causes the changed parameters to be saved to non-volatile memory. Normally parameters are saved when power is removed from the drive, but when performing a Read Parameter using FN2-91, the parameters need to be saved prior to execution of the read function.
		See Also: N/A

7.6 I/O (Input/Output) Group Parameters

Table 7-5 I/O (Input/Output) Group Parameters

Group	Number (LCD Display) Selection (Value)	Description
I/O	I/O-00 (Jump Code)	Default: 1 Range: 1 - 98
		Jump to Desired Code Number within I/O Group Sets the code to which to jump within the Input/Output group. Allows quick access to a desired parameter.
		See Also: N/A
	I/O-01 (V1 Filter)	Default: 10[mSec] Range: 0-9999[mSec]
		Filtering Time Constant for V1 Input **V2.5**: Filtering time constant for V1 signal input. Increase this value if the V1 signal is affected by noise and causing unstable operation of the inverter. Increasing this value makes response time slower. Refer to Chapter 8 “Customizing for your Application” for more information on Analog Inputs. **V1 & V2 only**: Displayed only when BAS-09 is set to “0 to10V”, “-10V to +10V”, or “0 to 10V + 4 to 20 mA”.
		See Also: N/A
	I/O-02 (V1 Min Volt)	Default: 0.00[V] Range: 0.00 to 10.00[V]
		V1 Input Minimum Voltage **V2.5**: Sets the minimum voltage of the V1 input at which inverter outputs minimum frequency. Refer to Chapter 8 “Customizing for your Application” for more information on Analog Inputs. **V1 & V2 only**: Displayed only when BAS-09 is set to “0 to10V”, “-10V to +10V”, or “0 to 10V + 4 to 20 mA”.
		See Also: N/A
	I/O-03 (V1 Min Freq)	Default: 0.00[Hz] Range: 0.00 to BAS-07[Hz] or 0.00 to 100.00[user selected units]
		Frequency Corresponding to V1 Input Minimum Voltage **V2.5**: Sets the inverter output minimum frequency (or target value) when there is the minimum voltage (I/O-02) on the V1 terminal. Refer to Chapter 8 “Customizing for your Application” for more information on Analog Inputs. **V1 & V2 only**: Displayed only when BAS-09 is set to “0 to10V”, “-10V to +10V”, or “0 to 10V + 4 to 20 mA”.
		See Also: N/A
	I/O-04 (V1 Max Volt)	Default: 10.00[V] Range: 0.00 to 12.00[V]
		V1 Input Maximum Voltage **V2.5**: Sets the maximum voltage of the V1 input at which the inverter outputs maximum frequency. Refer to Chapter 8 “Customizing for your Application” for more information on Analog Inputs. **V1 & V2 only**: Displayed only when BAS-09 is set to “0 to10V”, “-10V to +10V”, or “0 to 10V + 4 to 20 mA”.
		See Also: N/A

Table 7-5 I/O (Input/Output) Group Parameters Continued

Group	Number (LCD Display) Selection (Value)	Description
I/O	I/O-05 (V1 Max Freq)	Default: 60.00[Hz] Range: 0.00 to BAS-07[Hz] or 0.00 to 100.00[user selected units]
		Frequency Corresponding to V1 Input Maximum Voltage **V2.5**: Sets the inverter output maximum frequency (or target value) when there is the maximum voltage (I/O-04) on the V1 terminal. Refer to Chapter 8 “Customizing for your Application” for more information on Analog Inputs. **V1 & V2 only**: Displayed only when BAS-09 is set to “0 to10V”, “-10V to +10V”, or “0 to 10V + 4 to 20 mA”.
		See Also: N/A
	I/O-06 (I In Filter)	Default: 10 Range: 0-9999[mSec]
		Filtering Time Constant for I Signal Input **V2.5**: Command Freq setting via “I” input terminal when BAS-09 [Speed Reference Source] is set to “4 to 20 mA” or 0 to 10 V + 4 to 20 mA”. Filtering time constant for “I” signal input. If the “I” signal is affected by noise and causing unstable operation of the inverter, increase this value. Increasing this value makes response time slower. Refer to Chapter 8 “Customizing for your Application” for more information on Analog Current Input. **V1 & V2 only**: Displayed only when BAS-09 is set to “0 to10V”, “-10V to +10V”, or “0 to 10V + 4 to 20 mA”.
		See Also: N/A
	I/O-07 (I In MinCurr)	Default: 4.00 Range: 0.00 to 20.00[mA]
		I Input Minimum Current **V2.5**: Sets the minimum current of the “I” input at which the inverter outputs minimum frequency. Refer to Chapter 8 “Customizing for your Application” for more information on Analog Current Input. **V1 & V2 only**: Displayed only when BAS-09 is set to “0 to10V”, “-10V to +10V”, or “0 to 10V + 4 to 20 mA”.
		See Also: N/A
	I/O-08 (I In MinFreq)	Default: 0.00[Hz] Range: 0.00 to BAS-07[Hz] or 0.00 to 100.00[user selected units]
		Frequency Corresponding to I Input Minimum Current **V2.5**: Sets the inverter output minimum frequency (or target value) when there is minimum current (I/O-07) input on the “I” terminal. Refer to Chapter 8 “Customizing for your Application” for more information on Analog Current Input. **V1 & V2 only**: Displayed only when BAS-09 is set to “0 to10V”, “-10V to +10V”, or “0 to 10V + 4 to 20 mA”.
		See Also: N/A
	I/O-09 (I In MaxCurr)	Default: 20.00[mA] Range: I/O-07 to 20.00
		I Input Max Current **V2.5**: Sets the maximum current of the “I” input at which the inverter outputs maximum frequency. Refer to Chapter 8 “Customizing for your Application” for more information on Analog Current Input. **V1 & V2 only**: Displayed only when BAS-09 is set to “0 to10V”, “-10V to +10V”, or “0 to 10V + 4 to 20 mA”.
		See Also: N/A

Table 7-5 I/O (Input/Output) Group Parameters Continued

Group	Number (LCD Display) Selection (Value)	Description
I/O	I/O-10 (I In MaxFreq)	Default: 60.00[Hz] Range: 0.00 to BAS-07[Hz] or 0.00 to 100.00[user selected units]
		Frequency Corresponding to I Input Max Current **V2.5**: Sets the inverter output maximum frequency (or target value) when there is the maximum current input (I/O-09) on the "I" terminal. Refer to Chapter 8 "Customizing for your Application" for more information on Analog Current Input. **V1 & V2 only**: Displayed only when BAS-09 is set to "0 to10V", "-10V to +10V", or "0 to 10V + 4 to 20 mA".
		See Also: N/A
	I/O-11 (Pulse InSlct)	Default: A
	A+B	Pulse input
	A	Pulse input
		Pulse Input Method **V2.5**: Sets the frequency setting input method, either A or A+B. Refer to Chapter 8 "Customizing for your Application" for more information on Pulse Input. **V1 & V2 only**: Displayed only when BAS-09 is set to "Pulse".
		See Also: N/A
	I/O-12 (Pulse InFltr)	Default: 10 Range: 0-9999[mSec]
		Pulse Input Filter **V2.5**: Sets the embedded filter constant for Pulse Input. Increase filter time when the noise interference causes unstable operation. Increasing this value makes response time slower. Refer to Chapter 8 "Customizing for your Application" for more information on Pulse Input. **V1 & V2 only**: Displayed only when BAS-09 is set to "Pulse".
		See Also: N/A
	I/O-13 (PulseMinimum)	Default: 0.0[kHz] Range: 0.0 to 10.0 [kHz]
		Pulse Input Minimum Frequency **V2.5**: Sets the minimum frequency of the Pulse Input. Refer to Chapter 8 "Customizing for your Application" for more information on Pulse Input. **V1 & V2 only**: Displayed only when BAS-09 is set to "Pulse".
		See Also: N/A
	I/O-14 (PulseMnHzOut)	Default: 0.00[Hz] Range: 0.00 to BAS-07[Hz] or 0.00 to 100.00[user selected units]
		Frequency Corresponding to I/O-13 Pulse Input Minimum Frequency **V2.5**: Sets the inverter's minimum output frequency at minimum Pulse input frequency as set in I/O-13 [Pulse Input Min Frequency]. Refer to Chapter 8 "Customizing for your Application" for more information on Pulse Input. **V1 & V2 only**: Displayed only when BAS-09 is set to "Pulse".
		See Also: N/A

Table 7-5 I/O (Input/Output) Group Parameters Continued

Group	Number (LCD Display) Selection (Value)	Description
I/O	I/O-15 (PulseMaximum)	Default: 10.0[kHz] Range: 0.0 to 100.0 [kHz]
		Pulse Input Maximum Frequency **V2.5**: Sets the maximum frequency of the Pulse input. Refer to Chapter 8 “Customizing for your Application” for more information on Pulse Input. **V1 & V2 only**: Displayed only when BAS-09 is set to “Pulse”.
		See Also: N/A
	I/O-16 (PulseMxHzOut)	Default: 60.00[Hz] Range: 0.00 to BAS-07[Hz] or 0.00 to 100.00[user selected units]
		Frequency Corresponding to I/O-15 Pulse Input Maximum Frequency **V2.5**: Sets the inverter’s maximum output frequency at maximum Pulse input frequency as set in I/O-15 [Pulse Input Max Frequency]. Refer to Chapter 8 “Customizing for your Application” for more information on Pulse Input. **V1 & V2 only**: Displayed only when BAS-09 is set to “Pulse”.
		See Also: N/A
	I/O-17 (Wire Broken)	Default: None
	None	Disabled (Does not check the analog input signal loss)
	half of x1	Activated when drops below 50% of the minimum set value (I/O-02, I/O-07, I/O-13)
	below x1	Activated when drops below the minimum set value (I/O-02, I/O-07, I/O-13)
		Criteria for Analog Input Signal Loss Sets the level at which it is determined that analog input signal has been lost. When the analog input signal is lost, inverter displays the following: Display — Description LO — Loss of Analog input signal, V1 LO — Loss of Analog input signal, II LOA — Loss of pulse reference frequency
		See Also: N/A
	I/O-18 (Lost Command)	Default: None
	None	Continue operation at last frequency before command was lost
	Free Run	Coast to stop (Output disabled)
	Stop	Decel to stop
		Operating Selection at Loss of Frequency Reference Sets the Drive Mode that will be utilized if the frequency command is lost. Used when frequency command is supplied via V1 or I terminal or via communication option.
		See Also: N/A

Table 7-5 I/O (Input/Output) Group Parameters Continued

Group	Number (LCD Display) Selection (Value)	Description
I/O	**I/O-19 (Time Out)**	Default: 1.0[sec] Range: 0.1-120.0[sec]
		Waiting Time after Loss of Frequency Reference Sets the time the inverter takes to determine if the frequency command has been lost. If there is no command input within this time period, the inverter begins operating via the method specified in I/O-18 [Selection of Drive Mode After Loss of Frequency Command].
		See Also: N/A
	I/O-20 (DI M1 Define)	Default: Speed-L (0)
	I/O-21 (DI M2 Define)	Default: Speed-M (1)
	I/O-22 (DI M3 Define)	Default: Speed-H (2)
	I/O-23 (DI M4 Define)	Default: RST (27)
	I/O-24 (DI M5 Define)	Default: 2WEnbl/3WStop (12)
	I/O-25 (DI M6 Define)	Default: JOG (29) - Only available for 2wire control
	I/O-26 (DI M7 Define)	Default: FX (30)
	I/O-27 (DI M8 Define)	Default: RX (31)
		Programmable Digital Input Terminal Definition Specifies the function of Programmable Digital Input Terminal M1-M8. Refer to Chapter 8 “Customizing for your Application” for more information.
		See Also: N/A
	Speed-L (0)	Preset Speed Select Bit 1 - Reference DRV-05
	Speed-M (1)	Preset Speed Select Bit 2 - Reference DRV-06
	Speed-H (2)	Preset Speed Select Bit 3 - Reference DRV-07
	XCEL-L (3)	Accel/Decel Select Bit 1 - Reference I/O-50, -51
	XCEL-M (4)	Accel/Decel Select Bit 2 - Reference I/O-52, -53
	XCEL-H (5)	Accel/Decel Select Bit 3 - Reference I/O-54, -55
	DC-brake (6)	DC injection braking during stop - Reference FN1-25, -26, -27
	2nd Func (7)	Enables 2nd motor function
	Exchange (8)	Bypass to commercial line power
	Unused (9)	Available for future use
	Up (10)	Increase drive speed in E-pot mode
	Down (11)	Decrease drive speed in E-pot mode
	2WEnbl/3WStop (12)	2 wire Enable/3 wire Stop
	Ext Trip (13)	External trip input
	V1 and V2.5 Preheat (14)	Supply DC Current to Motor - Reference FN1-10, -11, -12
	iTerm Clear (15)	Used for PID control
	Open-loop (16)	Exchange between PID mode and V/F mode
	LOC/REM (17)	Exchange between DRV-91, 92 Local or Remote Mode
	Analog Hold (18)	Hold the analog input signal speed

Table 7-5 I/O (Input/Output) Group Parameters Continued

Group	Number (LCD Display) Selection (Value)	Description
I/O	**I/O 19 -27 Cont.**	
	XCEL stop (19)	Speed Hold
	P Gain2 (20)	Used for PID control - Reference APP-17
	Unused (21)	Available for future use
	Interlock 1 (22)	Used only in MMC Operation - See APP-40
	Interlock 2 (23)	Used only in MMC Operation - See APP-40
	Interlock 3 (24)	Used only in MMC Operation - See APP-40
	Interlock 4 (25)	Used only in MMC Operation - See APP-40
	Speed-X (26)	Additional Preset Speed Select Bit 4 - Reference I/O-31
	RST (27)	Reset faults
	BX (28)	BX (Drive Disable)
	JOG (29)	Jog Mode (used in 3 wire control)
	FX (30)	Forward Run in 2 wire/Start in 3 wire mode
	RX (31)	Reverse Run in 2 wire/direction change in 3 wire mode
	ANA_CHG (32)	Analog input Switch-over from V to I Only if BAS-09=0-10A+4-20mA
	Pre-Excite	Pre excitation. Applies DC magnetizing current to the motor to build the flux in Sensorless Control.
	Ext.PID Run (33)	Activate External PID loop
	Firestat (34)	Drive runs at Preset Speed 1
	Freezestat (35)	Drive runs at Preset Speed 2
	Up/Dn Clr (36) - **V2 & V2.5 only**	If in EPOT, resets speed reference to minimum if FN1-80 is set to "Yes"
	Jog Forward - **V2.5 only**	Jog Speed used in 2 wire control
	Jog Reverse - **V2.5 only**	Jog Speed used in 2 wire control
	I/O-28 (DigInStatus)	Default: Read Only Range: 00000000000 to 11111111111
		Terminal Input Status Displays the input status of control terminals M1 through M8 and P4 through P6. P4, P5, P6 will only be valid when an expansion board is installed.

LCD Keypad Display

Input T/M	P6	P5	P4	M8	M7	M6	M5	M4	M3	M2	M1
	bit 10	bit 9	bit 8	bit 7	bit 6	bit 5	bit 4	bit 3	bit 2	bit 1	bit 0
OFF status	0	0	0	0	0	0	0	0	0	0	0
ON status	1	1	1	1	1	1	1	1	1	1	1

See Also: N/A

Table 7-5 I/O (Input/Output) Group Parameters Continued

Group	Number (LCD Display) Selection (Value)	Description
I/O	I/O-29 (DigIn Filter)	Default: 15[mSec] Range: 2 to 1000[mSec]
		Filtering Time Constant for Programmable Digital Input Terminals Adjusts the responsiveness of the Input terminals. Useful when noise level is high. Higher values result in slower response times. NOTE: When using a digital input to sequence the drive with a bypass contactor (digital input set to "Exchange"), set this parameter greater than 100mSec to avoid chattering of the output command thus resulting in a malfunction in the bypass operation.
		See Also: N/A
	I/O-30 (Jog Speed)	Default: 10.00[Hz] Range: 0.00 to BAS-07[Hz]
		Jog Frequency Setting Sets the frequency for Jog operation. See I/O-31 to 42 and DRV-05 to 07 for additional information. Displayed only when one of I/O-20 through 27 is set to either JOG, Speed-L, Speed-M, or Speed-H. Note: Used in 3 wire control.
		See Also: N/A
	I/O-31 (PreSetSpd4)	Default: 40.00[Hz]
	I/O-32 (PreSetSpd5)	Default: 50.00[Hz]
	I/O-33 (PreSetSpd6)	Default: 40.00[Hz]
	I/O-34 (PresetSpd7)	Default: 30.00
		Range: 0.00 to BAS-07[Hz]
		Preset Speed Sets Step Frequency. Displayed only when one of I/O-20 through 27 is set to either JOG, Speed-L, Speed-M, or Speed-H.
		See Also: N/A
	JOG	Frequency when in JOG mode
	Speed-L	Frequency for Preset Speed Bit 1
	Speed-M	Frequency for Preset Speed Bit 2
	Speed-H	Frequency for Preset Speed Bit 3
	I/O-35 (PreSetSpd8)	Default: 20.00[Hz]
	I/O-36 (PreSetSpd9)	Default: 10.00[Hz}
	I/O-37 (PresetSpd11)	Default: 20.00[Hz]
	I/O-38 (PresetSpd11)	Default: 30.00[Hz]
	I/O-39 (PreSetSpd12)	Default: 40.00[Hz]
	I/O-40 (PreSetSpd13)	Default: 50.00[Hz]
	I/O-41 (PreSetSpd14)	Default: 40.00[Hz]
	I/O-42 (PresetSpd15)	Default: 30.00[Hz]
		Range: 0.00 to BAS-07[Hz]
		Preset Speed Sets Step Frequency. Displayed only when one of I/O-20 through 27 is set to Speed-X.
		See Also: N/A
	Speed-X	Frequency for Preset Speed Bit 4

Table 7-5 I/O (Input/Output) Group Parameters Continued

Group	Number (LCD Display) Selection (Value)	Description
I/O	**I/O-50 (Acc Time-1)**	Default: 20.0[sec]
	I/O-51 (Dec Time-1)	Default: 20.0[sec]
	I/O-52 (Acc Time-2)	Default: 30.0[sec]
	I/O-53 (Dec Time-2)	Default: 30.0[sec]
	I/O-54 (Acc Time-3)	Default: 40.0[sec]
	I/O-55 (Dec Time-3)	Default: 40.0[sec]
	I/O-56 (Acc Time-4)	Default: 50.0[sec]
	I/O-57 (Dec Time-4)	Default: 50.0[sec]
	I/O-58 (Acc Time-5)	Default: 40.0[sec]
	I/O-59 (Dec Time-5)	Default: 40.0[sec]
	I/O-60 (Acc Time-6)	Default: 30.0[sec]
	I/O-61 (Dec Time-6)	Default: 30.0[sec]
	I/O-62 (Acc Time-7)	Default: 20.0[sec]
	I/O-63 (Dec Time-7)	Default: 20.0[sec]
		Range: 0-6000[sec]
		Acceleration and Deceleration Time Displayed only when one of the I/O-20 through 27 is set to XCEL-L, XCEL-M, or XCEL-H
		See Also: N/A
	XCEL-L	Accel/Decel Select Bit 1
	XCEL-M	Accel/Decel Select Bit 2
	XCEL-H	Accel/Decel Select Bit 3
	I/O-70 (AnlgOutS0Sel)	Default: Frequency
	I/O-72 (AnlgOutS1Sel)	Default: Voltage
	Frequency	Output Frequency
	Current	Output Current
	Voltage	Output Voltage
	DC Link Vtg	Inverter DC Link Voltage
	Ext PID Out	Ext PID Out

Table 7-5 I/O (Input/Output) Group Parameters Continued

Group	Number (LCD Display) Selection (Value)	Description
I/O	I/O-70 & I/O-72 Cont.	**Output Item Selection**

Sel	Output	Output Value Determined by:
Frequency	Inverter output frequency	(Output freq./Max. freq.) x 10V x (IO-71 or 73) / 100
Current	Inverter output current	(Output current /Rated current) x 10V x (IO-71 or 73) / 100
Voltage	Inverter output voltage	(Output voltage / Max. output voltage) x 10V x (IO-71 or 73) / 100
DC Link Vtg	DC link voltage of inverter	(DC link voltage / Max. DC link voltage) x 10V x (IO-71 or 73) / 100
Ext PID Out	External PID output	(External PID output / 10000) x 10V x S0, S1 output gain (IO-71 or 73) / 100

NOTE: Maximum DC Link Voltage for 200V class is 410V and for 400V class 820V.

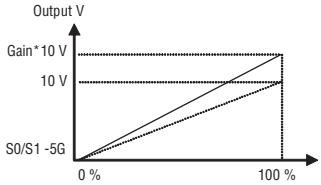

See Also: N/A

	I/O-71 (AnlgOutS0Gn)	Default: 100[%]
	I/O-73 (AnlgOutS1Gn)	Default: 100[%]
		Range: 10 to 200[%]
		Output Adjustment When connecting the Analog output to a meter, the value can be adjusted according to various meter specifications.

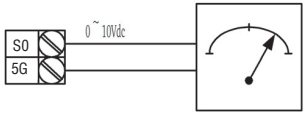

See Also: N/A

	I/O-74 (FreqDet Freq)	Default: 30.00[Hz]
	I/O-75 (FreqDet Band)	Default: 10.00[Hz]
		Range: 0.00 to BAS-07[Hz]
		Frequency Detection Level and Bandwidth Used along with I/O-76-79 [Programmable Digital Auxiliary Output Terminal]. See [FDT-#] in I/O-76 to 79. To use Programmable Digital output terminal Q1, Q2, and Q3, an option board must be installed.
		See Also: N/A
	I/O-76 (RlyOut 1 Def)	Default: None
	I/O-77 (RlyOut 2 Def)	Default: None
	I/O-78 (RlyOut 3 Def)	Default: None
	I/O-79 (RlyOut4 Def)	Default: None
	None	None
	FDT-1	Output frequency arrival detection

Table 7-5 I/O (Input/Output) Group Parameters Continued

Group	Number (LCD Display) Selection (Value)	Description
I/O	**I/O-76 thru I/O-79 Cont.**	
	FDT-2	Specific frequency level detection
	FDT-3	Frequency detection with pulse
	FDT-4	Frequency detection 1 with contact closure
	FDT-5	Frequency detection 2 with contact closure
	OL	Overload Detection
	IOL	Inverter Overload detection
	Stall	Motor Stall
	OV	High DC Bus
	LV	Low DC Bus
	OH	Heat Sink OverTemp
	Lost Command	Lost frequency reference detection
	Run	Inverter running detection
	Stop	Inverter stop detection
	Steady	Steady speed detection
	INV_line	By-Pass
	COMM_line	
	Speed Search	Speed search mode detection
	Ready	Inverter ready detection
	MMC - **V2 & V2.5 only**	Used for MMC operation
	Critical Trip - **V2 & V2.5 only**	Non-resettable fault
	Local - **V2.5 only**	Detects Local or Remote operation
		Programmable Digital Output Terminal Definition (Aux Terminal) A1-C1, A2-C2, A3-C3 and A4-C4 The auxiliary contact closes when the defined condition has occurred. See Chapter 8 “Customizing for your application” for details about the digital output functions.
		See Also: Chapter 8, Section 8.16

Table 7-5 I/O (Input/Output) Group Parameters Continued

Group	Number (LCD Display) Selection (Value)	Description
I/O	**I/O-80 (FltRly Mode)**	Default: 010 (bit) Range: 000 to 111 (Bit Set)

Bit	Setting	Display	Description
Bit 0 (LV)	0	000	Fault output relay does not operate at "Low voltage" trip.
	1	001	Fault output relay operates at "Low voltage" trip.
Bit 1 (Trip)	0	000	Fault output relay does not operate at any fault.
	1	010	Fault output relay operates at any fault except "Low voltage" and "BX" (inverter disable) fault.
Bit 2 (Retry)	0	000	Fault output relay does not operate regardless of the retry number.
	1	100	Fault output relay operates when the retry number set in FN2-26 decreases to 0 by faults. Disabled while Auto retry is ON.

Fault Output Relay Setting (3A, 3B, 3C)
Allows the fault output relay to operate when a fault occurs. The output relay terminals are 3A, 3B, 3C where 3A-3C is a normally open contact and 3B-3C is a normally closed contact. When several faults occur at the same time, Bit 1 has the first priority. (Active order: Bit 1->Bit 2->Bit3)

See Also: N/A

I/O-81 (DigOutStatus)

Default: Read Only
Range: 00000000 to 11111111

Output Terminals	3A-3C	Q3	Q2	Q1	AUX4	AUX3	AUX2	AUX1
	Bit 7	Bit 6	Bit 5	Bit 4	Bit 3	Bit 2	Bit 1	Bit 0
OFF status	0	0	0	0	0	0	0	0
ON status	1	1	1	1	1	1	1	1

Terminal Output Status
Displays the output status of control terminals.

See Also: N/A

I/O-82 (FltRlyOnDly)

Default: 0[sec]
Range: 0 to 999.9[sec]

Waiting Time after Fault Output Relay On
Fault relay output is delayed for the set time.

See Also: N/A

Table 7-5 I/O (Input/Output) Group Parameters

Group	Number (LCD Display) Selection (Value)	Description
I/O	**I/O-83 (FltRlyOffDly)**	Default: 0[sec] Range: 0 to 999.9[sec]
		Waiting Time after Fault Output Relay Off Fault relay output is turned OFF after the set time.
		See Also: N/A
	I/O-84 (Fan Mode)	Default: Power On Fan
	Power On Fan	Fan ON when inverter power is ON
	Run Fan	Fan ON when inverter runs (outputs its frequency)
	Temper-Fan	Fan ON when inverter temp exceeds the preset value in I/O-85
		Fan Control Selection (50 to 700HP) Only functional for inverters 50HP and higher.
		See Also: N/A
	I/O-85 (Fan Temper)	Default: 70[°C] Range: 0 to 70[°C]
		Fan Temperature (50 to 700HP) Only available for inverters 50HP and higher. Determines temperature at which fan turns on when I/O-84 is set to “Temper-Fan”.
		See Also: N/A
	I/O-86 (Unit Sel) - V2 & V2.5 only	Default: Percent
	Percent	Flow rate, pressure and temp are displayed in [%]
	Bar	Pressure is displayed in [Bar]
	mBar	Pressure is displayed in [mBar]
	kPa	Pressure is displayed in [kPa]
	PSi	Pressure is displayed by [PSi]
	Pa	Pressure is displayed in [Pa]
		Input User Unit Selection Set “Yes” in any one of parameters APP-02 [PID operation selection], APP-80 [Ext. PID operation selection] and APP-62 [PID Bypass selection]. Then, select one of the desired units of Percent, Bar, mBar, kPa, PSi, and Pa. All unit displays related to inverter target frequency are changed. When APP-02 [PID operation selection], APP-80 [Ext. PID operation selection] and APP-62 [PID Bypass selection] are set to “0”, I/O-86, -87, -88 are initialized to Percent [%]. If DRV-16 is changed to [Rpm], unit display is changed from [%] to [Rpm].
		See Also: N/A

Table 7-5 I/O (Input/Output) Group Parameters Continued

Group	Number (LCD Display) Selection (Value)	Description
I/O	**I/O-86 (V1 Input Units) - V1 only**	Default: 0 [Speed]
	0	[Speed] Displayed in Hz except when DRV-16 = RPM.
	1	[Percent] Flow rate, pressure and temp are displayed in %.
	2	[Bar] Pressure is displayed in Bar.
	3	[mBar] Pressure is displayed in mBar (milli Bars).
	4	[kPa] Pressure is displayed in kPascals.
	5	[Pa] Pressure is displayed in Pascals.
		Input User Unit Selection Sets the units of measure for the input signal.
		See Also: N/A
	I/O-87 (Unit Max Val) - V2 & V2.5 only	Default: 100.0 [%] Range: 0.1 to 999.9 [%]
		Unit Maximum Value Sets the maximum value for Input User Unit Selection (I/O-86).
		See Also: N/A
	I/O-87 (I Input Units) - V1 only	Default: 0 [Speed]
	0	[Speed] Displayed in Hz except when DRV-16 = RPM.
	1	[Percent] Flow rate, pressure and temp are displayed in %.
	2	[Bar] Pressure is displayed in Bar.
	3	[mBar] Pressure is displayed in mBar (milli Bars).
	4	[kPa] Pressure is displayed in kPascals.
	5	[Pa] Pressure is displayed in Pascals.
		Current Input User Unit Selection Sets the units of measure for the input signal.
		See Also: N/A
	I/O-88 (Pulse Input Units) - V1 only	Default: 0 [Speed]
	0	[Speed] Displayed in Hz except when DRV-16 = RPM.
	1	[Percent] Flow rate, pressure and temp are displayed in %.
	2	[Bar] Pressure is displayed in Bar.
	3	[mBar] Pressure is displayed in mBar (milli Bars).
	4	[kPa] Pressure is displayed in kPascals.
	5	[Pa] Pressure is displayed in Pascals.
		Pulse Input User Unit Selection Sets the units of measure for the input signal.
		See Also: N/A

Table 7-5 I/O (Input/Output) Group Parameters Continued

Group	Number (LCD Display) Selection (Value)	Description
I/O	I/O-90 (Drive Addr)	Default: 1 Range: 1 to 250
		Inverter Number Sets the inverter ID which is used with RS485 communication with PCs or PLCs.
		See Also: N/A
	I/O-91 (Baud Rate)	Default: 9600[bps]
	1200[bps]	
	2400[bps]	
	4800[bps]	
	9600[bps]	
	19200[bps]	
	38400[bps]	Available only when the external communication option card is installed
		Baud Rate Sets the Baud Rate (communication speed) of RS485 Communication. To make the multidrop system, connect the terminal C+ to other inverter's C+ and C- to C-.
		See Also: N/A
	I/O-92 (COM Lost Cmd)	Default: None
	None	Continuous operation after loss of communication signal
	Free Run	Inverter cuts off its output after determining loss of communication signal
	Stop	Inverter stops by its Decel pattern and Decel time after determining loss of communication signal
		Operating Method at Loss of Frequency Reference Specifies which operating method will be in place if frequency reference is lost.
		See Also: N/A
	I/O-93 (COM TimeOut)	Default: 1.0[sec] Range: 0.1 to 120[sec]
		Waiting Time after Loss of Frequency Reference Determines whether the signal is lost.
		See Also: N/A
	I/O-94 (Delay Time)	Default: 5[mSec] Range: 2 to 1000[mSec]
		Communication Response Delay Time For communication using RS232 to RS485 converter. It should be set properly according to RS232 to RS485 converter specifications.
		See Also: N/A

Table 7-5 I/O (Input/Output) Group Parameters Continued

Group	Number (LCD Display) Selection (Value)	Description
I/O	I/O-95 (DigIn Invert)	Default: 00000000000 Range: 00000000000 to 11111111111
		A or B Contact Programs input contact logic (Normal Open-A/Normal close-B Contact) for M1, M2, M3, M4, M5, M6, M7, M8, P4, P5, and P6. P4 through P6 can only be programmed when the expansion is installed.

Input T/M	P6	P5	P4	M8	M7	M6	M5	M4	M3	M2	M1
	bit 10	bit 9	bit 8	bit 7	bit 6	bit 5	bit 4	bit 3	bit 2	bit 1	bit 0
0: NO 1: NC	0/1	0/1	0/1	0/1	0/1	0/1	0/1	0/1	0/1	0/1	0/1

See Also: N/A

	I/O-96 (In CheckTime)	Default: 1[mSec] Range: 1 to 1000[mSec]
		Input Time When Multi-step speed or Multi-Accel/Decel operation is active, inverter determines the input to be valid after this amount of time elapses.
		See Also: N/A
	I/O-97 (OvrHtTripSel)	Default: 010 (Bit) Range: 000 to 111 (Bit Set)

Bit set			Function
2	1	0	
		1	Motor overheat trip setting (tripped at I/O-98)
	1		-Reserved-
1			External temperature sensor selection (PTC/ NTC)

		Overheat Trip Selection Inverter Overheat protection is active regardless of motor temp setting condition. Bit 1 is reserved for future use.
		See Also: N/A
	I/O-98 (MotTripTemp)	Default: 110[°C] Range: 0 to 255[°C]
		Motor Overheat Trip Temperature Sets the temperature at which motor overtrip is detected.
		See Also: N/A

7.7 Application Group Parameters

Table 7-6 Application Group Parameters

Group	Number (LCD Display) Selection (Value)	Description
APP	**APP-00 (Jump Code)**	Default: 1 Range: 1 to 97
		Jump to Desired Code Number within the APP Group Sets the code to which to jump within the Application Group. Allows quick access to a desired parameter.
		See Also: N/A
	APP-01 (App Mode)	Default: None
	None	Not selected
	MMC - **V2 & V2.5 only**	Multi-Motor Control selected
		Application Mode Selection Sets the application mode. If MMC is selected, parameters APP-40 through APP-71 are displayed. I/O-76 through 79 [Programmable digital Aux relay output] is automatically set to “MMC”. If less than 4 aux motors are connected, the remaining relays can be used for other functions. Note: I/O-76 through 79 value is not initialized automatically even though “None” is set after setting “MMC”. In this case, set I/O-76 through 79 again for desired selection.
		See Also: N/A
	APP-02 (Proc PI Mode)	Default: No
	No	PID operation inactive
	Yes	PID operation activated
		PID Operation Selection Refer to Chapter 8 “Customizing for your Application” for more information on PID Operation.
		See Also: N/A
	APP-03 (PID FFwd Gn)	Default: 0.0 Range: 0.0 - 999.9[%]
		PID Feed Forward (F) Gain Selection Sets the F Gain for the PID Controller, which is the gain to add the target value to the PID controller output. When it is set to 100%, the responsiveness (%) of output F gain from the controller reference value is 100%. Used when a fast response is needed. Displayed only: when APP-02 is set to “Yes”. NOTE: Control System output may become unstable if this value is set too high.
		See Also: N/A
	APP-04 (Aux Ref Enbl)	Default: No
	No	Auxilliary reference mode is disabled
	Yes	Auxilliary reference mode is enabled
		PID Auxiliary Reference Mode Selection Selects PID Aux Ref. Input Enable/Disable. See PID Block Diagram (Chapter 8) for details. Displayed only: when APP-02 is set to “Yes”.
		See Also: N/A

Table 7-6 Application Group Parameters Continued

Group	Number (LCD Display) Selection (Value)	Description
APP	**APP-05 (Aux Ref Sel)**	Default: -10V to +10V
	Keypad-1	Auxilliary reference from Keypad
	0~+10V	Auxilliary reference from analog input signal
	-10V~+10V	Auxilliary reference from analog input signal
	4~20mA	Auxilliary reference from analog input signal
	0~10V+4~20mA	Auxilliary reference from analog input signal
	Pulse	Auxilliary reference from pulse input
	Int. 485	Auxilliary reference from network communication
	Ext PID	Auxilliary reference from PID reference signal
		PID Auxiliary Reference Signal Selection Sets the source of Aux reference signal. When APP-04 is set to "No," BAS-09, Multi-step frequency, UP/DOWN, & Jog frequency become PID controller's reference. When APP-04 is set to "Yes," PID reference is issued from the value set here. Displayed only: when APP-02 is set to "Yes".
		See Also: N/A
	APP-06 (PID Fbk Src)	Default: I
	I	Current Feedback
	V1	Voltage 1 Feedback
	Pulse	Pulse Feedback
		PID Feedback Signal Selection Select the feedback signal for PID control. This can be set to one of "I" (4 to 20mA), "V1", "V2" and "Pulse" according to the signal (current or voltage) and the terminal (V1 (0-10V), or Pulse (0 to 100kHz). Refer to I/O 6 through 10 for I, I/O1 through 5 for V1, I/O-11through 16 for Pulse and EXT-6 through 10. Displayed only: when APP-02 is set to "Yes".
		See Also: N/A
	APP-07 (Meter I Max) - V2 & V.2.5 only	Default: 20.00 mA Range: 0 to 20.00 mA
		Meter I Maximum Value Used if APP-06 is set to I. Set this value to maximum value of current feedback.
		See Also: I/O-86, I/O-87
	APP-07 (PID P Gain) - V1 only	Default: 1.0[%] Range: 0.0 to 999.9[%]
		Proportional (P) Gain for PID Controller Sets the proportional gain for PID control. When P-Gain is set at 100% and I-Time at 0.0 second, it means the PID controller output is 100% for 100% error value. P-Gain is set to 50% and I- Time to 0.0 sec, PID controller output becomes 50% for 100% error value. Displayed only: when APP-02 is set to "Yes".
		See Also: N/A

Table 7-6 Application Group Parameters Continued

Group	Number (LCD Display) Selection (Value)	Description
APP	**APP-08 (Meter V Max) - V2 & V2.5 only**	Default: 10.00 V Range: 0 to 12.00 V
		Meter V Maximum Value Used if APP-06 is set to VI. Set this value to maximum value of voltage feedback.
		See Also: N/A
	APP-08 (PID I Time) - V1 only	Default: 10.0[sec] Range: 0 to 32.0[sec]
		Integral Time (I) Gain for PID Controller Sets the integral time for PID control. This is the time the PID controller takes to output 100% for 100% error value. For example, when it is set to 30 sec, 30 sec is taken for PID controller to output 100% for 100% error value. 100% error means feedback value is 0 to the preset reference value. Displayed only: when APP-02 is set to “Yes”.
		See Also: N/A
	APP-09 (Meter P Max) - V2 & V2.5 only	Default: 100.0 kHz Range: 0 to 100.0 kHz
		Meter P Maximum Value Used if APP-06 is set to Pulse. Set this value to maximum value of pulse feedback.
		See Also: N/A
	APP-09 (PID D Time) - V1 only	Default: 0.0[mSec] Range: 0.0 to 100.0[mSec]
		Differential Time (D) Gain for PID Controller Sets the D time for the PID Controller, which is the output value corresponding to the variation of the error. The error is detected every 0.01 sec in VS1PF. If differential time is set to 0.01 sec and the percentage variation of error is 100% per 1 sec, 1% in 100% is output per 10mSec. Displayed only: when APP-02 is set to “Yes”.
		See Also: N/A
	APP-10 (PID Hi Limit) - V1 only	Default: 60.00[Hz] Range: 0.00 to FN1-30
		High Limit Frequency for PID Control Sets the upper output frequency limit through the PID Controller. Displayed only: when APP-02 is set to “Yes”.
		See Also: N/A

Table 7-6 Application Group Parameters Continued

Group	Number (LCD Display) Selection (Value)	Description
APP	**APP-11 (PID P Gain) - V2 & V2.5 only**	Default: 1.0[%] Range: 0.0 to 999.9[%]
		Proportional (P) Gain for PID Controller Sets the proportional gain for PID control. When P-Gain is set at 100% and I-Time at 0.0 second, it means the PID controller output is 100% for 100% error value. P-Gain is set to 50% and I- Time to 0.0 sec, PID controller output becomes 50% for 100% error value. Displayed only: when APP-02 is set to “Yes”.
		See Also: N/A
	APP-11 (PID LowLimit) - V1 only	Default: 0.50[Hz] Range: FN1-32 to APP-10[Hz]
		Low Limit Frequency for PID Control Sets the lower output frequency limit through the PID Controller. Displayed only: when APP-02 is set to “Yes”.
		See Also: N/A
	APP-12 (PID I Time) - V2 & V2.5 only	Default: 10.0[sec] Range: 0 to 32.0[sec]
		Integral Time (I) Gain for PID Controller Sets the integral time for PID control. This is the time the PID controller takes to output 100% for 100% error value. For example, when it is set to 30 sec, 30 sec is taken for PID controller to output 100% for 100% error value. 100% error means feedback value is 0 to the preset reference value. Displayed only: when APP-02 is set to “Yes”.
		See Also: N/A
	APP-12 (PID OutScale) - V1 only	Default: 100.0[%] Range: 0.0 to 999.9[%]
		PID Output Scale Sets the scale of PID controller output. Displayed only: when APP-02 is set to “Yes”.
		See Also: N/A
	APP-13 (PID D Time) - V2 & V2.5 only	Default: 0.0[mSec] Range: 0.0 to 100.0[mSec]
		Differential Time (D) Gain for PID Controller Sets the D time for the PID Controller, which is the output value corresponding to the variation of the error. The error is detected every 0.01 sec in VS1PF. If differential time is set to 0.01 sec and the percentage variation of error is 100% per 1 sec, 1% in 100% is output per 10mSec. Displayed only: when APP-02 is set to “Yes”.
		See Also: N/A

Table 7-6 Application Group Parameters Continued

Group	Number (LCD Display) Selection (Value)	Description
APP	**APP-13 (PID P2 Gain) - V1 only**	Default: 100[%] Range: 0.0 to 999.9[%
		PID P2 Gain Sets the second P-Gain for PID control. Displayed only: when APP-02 is set to “Yes”.
		See Also: N/A
	APP-14 (PID Hi Limit) - V2 & V2.5 only	Default: 60.00[Hz] Range: 0.00 to BAS-07[Hz]
		High Limit Frequency for PID Control Sets the upper output frequency limit through the PID Controller. Displayed only: when APP-02 is set to “Yes”.
		See Also: N/A
	APP-14 (P Gain Scale) - V1 only	Default: 100[%] Range: 0 to 100[%]
		P Gain Scale Sets the conversion scale of P-Gain and P2-Gain. Displayed only: when APP-02 is set to “Yes”.
		See Also: N/A
	APP-15 (PID LowLimit) - V2 & V2.5 only	Default: 0.50[Hz] Range: FN1-32 to APP-10[Hz]
		Low Limit Frequency for PID Control Sets the lower output frequency limit through the PID Controller. Displayed only: when APP-02 is set to “Yes”.
		See Also: N/A
	APP-15 (PID OutInvrt) - V1 only	Default: No
	No	PID Output Inverse is not selected
	Yes	PID Output Inverse is selected
		PID Output Inverse Sets PID controller’s output inversion. Displayed only: when APP-02 is set to “Yes”.
		See Also: N/A
	APP-16 (PID OutScale) - V2 & V2.5 only	Default: 100.0[%] Range: 0.0 to 999.9[%]
		PID Output Scale Sets the scale of PID controller output. Displayed only: when APP-02 is set to “Yes”.
		See Also: N/A
	APP-17 (PID P2 Gain) - V2 & V2.5 only	Default: 100[%] Range: 0.0 to 999.9[%]
		PID P2 Gain Sets the second P-Gain for PID control. Displayed only: when APP-02 is set to “Yes”.
		See Also: N/A

Table 7-6 Application Group Parameters Continued

Group	Number (LCD Display) Selection (Value)	Description
APP	**APP-17 (PID U Fbk) - V1 only**	Default: No
	No	PID U Curve Feedback is not selected
	Yes	PID U Curve Feedback is selected
		PID U Curve Feedback Selection Converts linear pattern of a feedback sensor to the squared pattern without any additional settings. Useful for fan and pump applications. NOTE: PID output value can be set to “0” by setting a Programmable digital input terminal (M1 to M8) to “Open loop” in I/O-20 to I/O-27. NOTE: The accumulated value by I-Gain can be set to “0” by setting a Programmable digital input terminal (M1 to M8) to “iTerm Clear” in I/O-20 to I/O-27. NOTE: The P-Gain 2 can be selected for PID controller by setting a Programmable digital input (I/O-20 to I/O-27) to “Open-loop”. NOTE: When APP-02 [PID operation selection] is set to “Yes”, a desired display unit in I/O-86, -87, -88 [User Unit selection] is set among Speed, Percent, Bar, mBar, kPa, Pa. This selection will affect the value display of APP-06 [PID feedback selection]; all the parameter units related to inverter target frequency will be changed. Displayed only: when APP-02 is set to “Yes”.
		See Also: N/A
	APP-18 (P Gain Scale) - V2 & V2.5 only	Default: 100[%] Range: 0 to 100[%]
		P Gain Scale Sets the conversion scale of P-Gain and P2-Gain. Displayed only: when APP-02 is set to “Yes”.
		See Also: N/A
	APP-19 (PID OutInvrt) - V2 & V2.5 only	Default: No
	No	PID Output Inverse is not selected
	Yes	PID Output Inverse is selected
		PID Output Inverse Sets PID controller’s output inversion. Displayed only: when APP-02 is set to “Yes”.
		See Also: N/A

Table 7-6 Application Group Parameters Continued

Group	Number (LCD Display) Selection (Value)	Description
APP	**APP-20 (PID U Fbk) - V2 & V2.5 only**	Default: No
	No	PID U Curve Feedback is not selected
	Yes	PID U Curve Feedback is selected
		PID U Curve Feedback Selection Converts linear pattern of a feedback sensor to the squared pattern without any additional settings. Useful for fan and pump applications. NOTE: PID output value can be set to “0” by setting a Programmable digital input terminal (M1 to M8) to “Open loop” in I/O-20 to I/O-27. NOTE: The accumulated value by I-Gain can be set to “0” by setting a Programmable digital input terminal (M1 to M8) to “iTerm Clear” in I/O-20 to I/O-27. NOTE: The P-Gain 2 can be selected for PID controller by setting a Programmable digital input (I/O-20 to I/O-27) to “Open-loop”. NOTE: When APP-02 [PID operation selection] is set to “Yes”, a desired display unit in I/O-86, -87, -88 [User Unit selection] is set among Speed, Percent, Bar, mBar, kPa, Pa. This selection will affect the value display of APP-06 [PID feedback selection]; all the parameter units related to inverter target frequency will be changed. Displayed only: when APP-02 is set to “Yes”.
		See Also: N/A
	APP-20 (2nd Acc Time) - V1 only	Default: 5.0[sec] Range: 0-6000[sec]
		Second Motor Acceleration Time Sets the acceleration time for the second motor. Displayed only when one of I/O-20 through 27 is set to [2nd Function].
		See Also: N/A
	APP-21 (2nd Dec Time) - V1 only	Default: 10.0[sec] Range: 0-6000[sec]
		Second Motor Deceleration Time Sets the deceleration time for the second motor. Displayed only when one of I/O-20 through 27 is set to [2nd Function].
		See Also: N/A
	APP-22 (2nd BaseFreq) - V1 only	Default: 60.00[Hz] Range: 30 to FN1-30[Hz]
		Second Motor Base Frequency Sets the frequency at which the inverter outputs its rated voltage to the second motor. Reference the motor nameplate. Displayed only when one of I/O-20 through 27 is set to [2nd Function].
		See Also: N/A
	APP-23 (PrePID Freq) - V2 & V2.5 only	Default: 0.00[Hz]
		Range: 0.00 to BAS-07[Hz]
		PrePID Reference Frequency Specifies the inverter target frequency to be output until Pre PID operation is finished when Inverter Run signal is ON and Pre PID operation is selected. Before PID operation is started, PrePID fills water in the pump and pipe.
		See Also: N/A

Table 7-6 Application Group Parameters Continued

Group	Number (LCD Display) Selection (Value)	Description
APP	**APP-23 (2nd V/F) - V1 only**	Default: 0-Linear
	0-Linear	Linear V/F pattern
	1-Square	Square V/F pattern
	2-User Defined V/F Pattern	User Defined V/F pattern
		Second Motor V/F Pattern Sets the V/F pattern for the second motor. Displayed only when one of I/O-20 through 27 is set to [2nd Function].
		See Also: N/A
	APP-24 (PrePID Exit) - V2 & V2.5 only	Default: 0[%]
		Range: 0 to 100[%]
		PrePID Exit Level During PrePID operation, when the PID feedback signal exceeds this value, PrePID operation ends and PID begins.
		See Also: N/A
	APP-24 (2nd F-Boost) - V1 only	Default: 2[%] Range: 0 to 15[%]
		Second Motor Forward Torque Boost Sets the level of torque boost applied to the second motor during forward run. Set as a percentage of Max Output Voltage. Displayed only when one of I/O-20 through 27 is set to [2nd Function].
		See Also: N/A
	APP-25 (PrePID dly) - V2 & V2.5 only	Default: 600[sec] Range: 0 to 9999[sec]
		PrePID Stop Delay When feedback value is less than APP-24 value even though time set in APP-25 elapses, inverter signals system malfunction. It can be set by the user to fit the system in use.
		See Also: APP-23, APP-24, APP-26, Chapter 8 - Customizing Your Application
	APP-25 (2nd R-Boost) - V1 only	Default: 2[%] Range: 0-15[%]
		Second Motor Reverse Torque Boost Sets the level of torque boost applied to the second motor during reverse run. Set as a percentage of Max Output Voltage. Displayed only when one of I/O-20 through 27 is set to [2nd Function].
		See Also: N/A
	APP-26 (Pipe Broken) - V2 & V2.5 only	Default: No
	No	Function not activated
	Yes	Function operates and can display a flow problem
		Pipe Broken If the detected value is below the setting of APP-24 and exceeds the value set of APP-25, the system shows “Pipe Broken” - signifying that there is a problem with the flow.
		See Also: APP-23, APP-24, APP-25, Chapter 8 - Customizing Your Application

Table 7-6 Application Group Parameters Continued

Group	Number (LCD Display) Selection (Value)	Description
APP	**APP-26 (2nd Stall) - V1 only**	Default: 100[%] Range: 30 to 150[%]
		Second Motor Stall Prevention Level Sets the current level required to activate stall prevention function for the second motor during Accel, steady state, or Decel. Set as a percentage of APP-29[Second Motor Rated Current]. Displayed only when one of I/O-20 through 27 is set to [2nd Function].
		See Also: N/A
	APP-27 (Sleep Delay) - V2 & V2.5 only	Default: 60.0[sec] Range: 0.0 to 9999[sec]
		Sleep Delay Time Sleep function is initiated when flow demand is low. Inverter stops the motor when the motor runs below Sleep Frequency (APP-28) after Sleep Delay Time (APP-27) has elapsed. While in the sleep state, inverter keeps monitoring flow demand and initiates Wake-Up function when the real value of the controlling amount has increased above the Wake-Up level (APP-29). NOTE: Sleep function is disabled if this value is set to “0”. NOTE: APP-02 must be set to YES to see this parameter, APP-28 and APP-29. 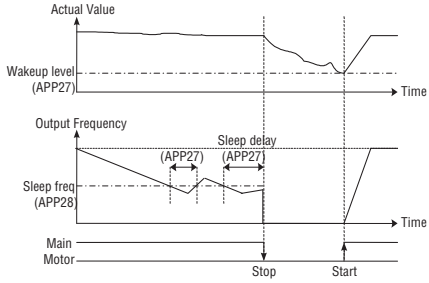
		See Also: N/A
	APP-27 (2nd ETH 1min) - V1 only	Default: 130% Range: FN2-28 to 200[%]
		Second Motor Electronic Thermal Level for 1 Minute Sets the maximum level of current the motor can tolerate for 1 minute. Set as a percentage of [Second Motor Rated Current]. Cannot be set below APP-28[Second Motor Electronic Thermal Level for Continuous]. Displayed only when one of I/O-20 through 27 is set to “2nd Function”.
		See Also: N/A
	APP-28 (Sleep Freq) - V2 & V2.5 only	Default: 0.00[Hz] Range: 0.00 to BAS-07[Hz]
		Sleep Frequency See APP-27 for information regarding sleep function.
		See Also: N/A

Table 7-6 Application Group Parameters Continued

Group	Number (LCD Display) Selection (Value)	Description
APP	**APP-28 (2nd ETH Cont) - V1 only**	Default: 120[%] Range: 50 to FN2-27[Max. 150%]
		Second Motor Electronic Thermal Level for Continuous Sets the continuous current rating of the second motor. Set as a percentage of [SecondMotor Rated Current]. Cannot be set above "Second Motor Electronic Thermal Level" for 1 Minute. Displayed only when one of I/O-20 through 27 is set to "2nd Function".
		See Also: N/A
	APP-29 (WakeUp Level) - V2 & V2.5 only	Default: 2.0[%] Range: 0.0 to 100.0[%]
		Wake-Up Level See APP-27 for information regarding sleep function.
		See Also: N/A
	APP-29 (2nd R-Curr) - V1 only	Default: 3.6[A] Range: 1 to 200[A]
		Second Motor Rated Current Enter the rated current from the second motor nameplate. Displayed only when one of I/O-20 through 27 is set to "2nd Function".
		See Also: N/A
	APP-30 (2nd Acc Time) - V2 & V2.5 only	Default: 5.0[sec] Range: 0-6000[sec]
		Second Motor Acceleration Time Sets the acceleration time for the second motor. Displayed only when one of I/O-20 through 27 is set to [2nd Function].
		See Also: N/A
	APP-31 (2nd Dec Time) - V2 & V2.5 only	Default: 10.0[sec] Range: 0-6000[sec]
		Second Motor Deceleration Time Sets the deceleration time for the second motor. Displayed only when one of I/O-20 through 27 is set to [2nd Function].
		See Also: N/A
	APP-32 (2nd BaseFreq) - V2 & V2.5 only	Default: 60.00[Hz] Range: 30 to BAS-07[Hz]
		Second Motor Base Frequency Sets the frequency at which the inverter outputs its rated voltage to the second motor. Reference the motor nameplate. Displayed only when one of I/O-20 through 27 is set to [2nd Function].
		See Also: N/A
	APP-33 (2nd V/F) - V2 & V2.5 only	Default: Linear
	Linear	Linear V/F pattern
	Square	Square V/F pattern
	User Defined V/F Pattern	User Defined V/F pattern
		Second Motor V/F Pattern Sets the V/F pattern for the second motor. Displayed only when one of I/O-20 through 27 is set to [2nd Function].
		See Also: N/A

Table 7-6 Application Group Parameters Continued

Group	Number (LCD Display) Selection (Value)	Description
APP	**APP-34 (2nd F-Boost) - V2 & V2.5 only**	Default: 2[%] Range: 0 to 15[%]
		Second Motor Forward Torque Boost Sets the level of torque boost applied to the second motor during forward run. Set as a percentage of Max Output Voltage. Displayed only when one of I/O-20 through 27 is set to [2nd Function].
		See Also: N/A
	APP-35 (2nd R-Boost) - V2 & V2.5 only	Default: 2[%] Range: 0-15[%]
		Second Motor Reverse Torque Boost Sets the level of torque boost applied to the second motor during reverse run. Set as a percentage of Max Output Voltage. Displayed only when one of I/O-20 through 27 is set to [2nd Function].
		See Also: N/A
	APP-36 (2nd Stall) - V2 & V2.5 only	Default: 100[%] Range: 30 to 150[%]
		Second Motor Stall Prevention Level Sets the current level required to activate stall prevention function for the second motor during Accel, steady state, or Decel. Set as a percentage of APP-29[Second Motor Rated Current]. Displayed only when one of I/O-20 through 27 is set to [2nd Function].
		See Also: N/A
	APP-37 (2nd ETH 1min) - V2 & V2.5 only	Default: 130% Range: APP-38 to 200[%]
		Second Motor Electronic Thermal Level for 1 Minute Sets the maximum level of current the motor can tolerate for 1 minute. Set as a percentage of [Second Motor Rated Current]. Cannot be set below APP-28[Second Motor Electronic Thermal Level for Continuous]. Displayed only when one of I/O-20 through 27 is set to “2nd Function”.
		See Also: N/A
	APP-38 (2nd ETH Cont) - V2 & V2.5 only	Default: 120[%] Range: 50 to APP-37[%]
		Second Motor Electronic Thermal Level for Continuous Sets the continuous current rating of the second motor. Set as a percentage of [SecondMotor Rated Current]. Cannot be set above “Second Motor Electronic Thermal Level” for 1 Minute. Displayed only when one of I/O-20 through 27 is set to “2nd Function”.
		See Also: N/A
	APP-39 (2nd R-Curr) - V2 & V2.5 only	Default: 3.6[A] Range: 1 to 200[A]
		Second Motor Rated Current Enter the rated current from the second motor nameplate. Displayed only when one of I/O-20 through 27 is set to “2nd Function”.
		See Also: N/A

Table 7-6 Application Group Parameters Continued

Group	Number (LCD Display) Selection (Value)	Description
APP	**APP-40 (Aux Mot Run) - V2 and V2.5 Only**	Default: 0 Range: 0 to 4
		Number of Auxiliary Motor Run Display Shows how many motors are being run by MMC control. Displayed only when APP-01 is set to “MMC”. 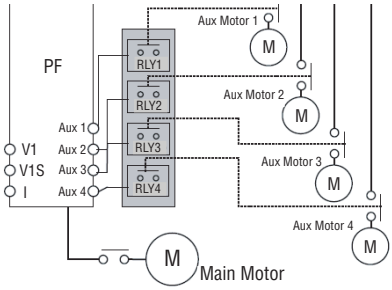 [MMC Diagram]
		See Also: N/A
	APP-41 (Starting Aux)- V2 and V2.5 Only	Default: 1 Range: 1 to 4
		Aux Motor Start Selection Defines the starting auxiliary motor for MMC control. Displayed only when APP-01 is set to “MMC”.
		See Also: N/A
	APP-42 (Auto Op Time)- V2 and V2.5 Only	Default: 00:00 Range: N/A
		Operation Time Display on Auto Change Displays the operation time after Auto Change is accomplished. Displayed only when APP-01 is set to “MMC”.
		See Also: N/A
	APP-43 (Nbr Aux’s)- V2 and V2.5 Only	Default: 4 Range: 0 to 4
		The Number of Aux Motor Sets the number of auxiliary motors connected to the inverter. Displayed only when APP-01 is set to “MMC”.
		See Also: N/A
	APP-44 (F-in-L-out) - V2 & V2.5 only	Default: Yes
	No	Not activated
	Yes	Activated
		F-in L-Out Sets auxiliary motor stop sequence. Displayed only when APP-01 is set to “MMC”.
		See Also: N/A

Table 7-6 Application Group Parameters Continued

Group	Number (LCD Display) Selection (Value)	Description
APP	**APP-45 (ALL Stop) - V2 & V2.5 only**	Default: Yes
	No	Not activated
	Yes	Activated
		ALL Stop Sets stop command for all auxiliary motors. Displayed only when APP-01 is set to “MMC”.
		See Also: N/A
	APP-47 (Start Freq 1) - V2 & V2.5 only	Default: 49.99 [Hz]
		Range: 0 to BAS-07
		Start Frequency of Aux Motor 1 Sets the starting frequency of Aux Motor 1.
		See Also: N/A
	APP-48 (Start Freq 2) - V2 & V2.5 only	Default: 49.99 [Hz]
		Range: 0 to BAS-07
		Start Frequency of Aux Motor 2 Sets the starting frequency of Aux Motor 2.
		See Also: N/A
	APP-49 (Start Freq 3) - V2 & V2.5 only	Default: 49.99 [Hz]
		Range: 0 to BAS-07
		Start Frequency of Aux Motor 3 Sets the starting frequency of Aux Motor 3.
		See Also: N/A
	APP-50 (Start Freq 4) - V2 & V2.5 only	Default: 49.99 [Hz]
		Range: 0 to BAS-07
		Start Frequency of Aux Motor 4 Sets the starting frequency of Aux Motor 4.
		See Also: N/A

Table 7-6 Application Group Parameters Continued

Group	Number (LCD Display) Selection (Value)	Description
APP	**APP-51 (Stop Freq 1) - V2 & V2.5 Only**	Default: 20.00 [Hz]
	APP-52 (Stop Freq 2) - V2 & V2.5 Only	Default: 20.00 [Hz]
	APP-53 (Stop Freq 3) - V2 & V2.5 Only	Default: 20.00 [Hz]
	APP-54 (Stop Freq 4) - V2 & V2.5 Only	Default: 20.00 [Hz]
		Range: 0 to BAS-07
		Stop Frequency of Aux Motor Sets the stopping frequency of Aux Motor. Displayed only when APP-01 is set to “MMC”.
		See Also: N/A
	APP-58 (Aux Start DT) - V2 & V2.5 Only	Default: 5.0 [sec] Range: 0.0 to 999.9 [sec]
		Delay Time Before Operating Aux Motor Sets the time the inverter waits before starting the auxiliary motors. Displayed only when APP-01 is set to “MMC”.
		See Also: N/A
	APP-59 (Aux Stop DT) - V2 & V2.5 Only	Default: 5.0 [sec] Range: 0.0 to 999.9 [sec]
		Delay Time Before Stopping Aux Motor Sets the time the inverter waits before stopping the auxiliary motors. Displayed only when APP-01 is set to “MMC”.
		See Also: N/A
	APP-60 (PID Acc Time) - V2 & V2.5 Only	Default: 2.0 [sec] Range: 0 to 600.00 [sec]
		Accel Time When Number of Pumps Decreases Sets the acceleration time of the main motor by 0.1 sec when less auxiliary motors are connected. Displayed only when APP-01 is set to “MMC”.
		See Also: N/A
	APP-61 (PID Dec Time) - V2 & V2.5 Only	Default: 2.0 [sec] Range: 0 to 600.00 [sec]
		Decel Time When Number of Pumps Increases Sets the deceleration time of the main motor by 0.1 sec when more auxiliary motors are connected. Displayed only when APP-01 is set to “MMC”.
		See Also: N/A
	APP-62 (Regul Bypass) - V2 & V2.5 Only	Default: No
	No	Disabled
	Yes	Activated
		PID Bypass Selection Used to bypass the PID operation selected in APP-02. Set this code to “Yes” when using MMC function without PID control. Frequency is determined by feedback of control amount instead of PID controller output. Displayed only when APP-01 is set to “MMC”.
		See Also: N/A

Table 7-6 Application Group Parameters Continued

Group	Number (LCD Display) Selection (Value)	Description
APP	**APP-63 (Sleep Delay) - V1 Only**	Default: 60.0[sec] Range: 0.0 to 9999[sec]
		Sleep Delay Time Sleep function is initiated when flow demand is low. Inverter stops the motor when the motor runs below Sleep Frequency (APP-28) after Sleep Delay Time (APP-27) has elapsed. While in the sleep state, inverter keeps monitoring flow demand and initiates Wake-Up function when the real value of the controlling amount has increased above the Wake-Up level (APP-29). NOTE: Sleep function is disabled if this value is set to “0”. NOTE: APP-02 must be set to YES to see this parameter, APP-28 and APP-29. 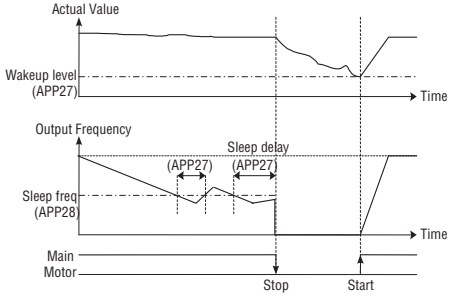
		See Also: N/A
	APP-64 (Sleep Freq) - V1 Only	Default: 0.00[Hz] Range: 0.00 to FN1-30[Hz]
		Sleep Frequency See APP-27 for information regarding sleep function.
		See Also: N/A
	APP-65 (WakeUp Level) - V1 Only	Default: 2.0[%] Range: 0.0 to 100.0[%]
		Wake-Up Level See APP-27 for information regarding sleep function.
		See Also: N/A
	APP-66 (AutoCh_Mode) - V2 & V2.5 Only	Default: EXCH_NONE
	EXCH_NONE	Auto Change Function not used
	AUX_EXCH	Auto Change Function applies only to auxiliary motors
	MAIN_EXCH	All motors connected to relays, none to inverter
		Auto Change Mode Selection Used to change the running order of the motors to regulate their run-time when multiple motors are connected for MMC. Displayed only when APP-01 is set to “MMC”.
		See Also: N/A

Table 7-6 Application Group Parameters Continued

Group	Number (LCD Display) Selection (Value)	Description
APP	**APP-67 (AutoEx-Invt) - V2 & V2.5 Only**	Default: 72:00 Range: 00:00 to 99:00
		Auto Change Time Used to protect motor from running alone for an extended time by changing operation to another motor. Displayed only when APP-01 is set to “MMC”.
		See Also: N/A
	APP-68 (AutoEx-Freq) - V2 & V2.5 Only	Default: 20.00 [Hz] Range: FN1-32 to BAS-07
		Auto Change Freq Changes operation to another motor when actual value of controlling amount is less than value set here. Displayed only when APP-01 is set to “MMC”.
		See Also: N/A
	APP-69 (Inter-lock) - V2 & V2.5 Only	Default: No
	No	Not active
	Yes	Active
		Inter-Lock Selection When set to “Yes” M1-M4 can be used as the same activating condition for AX1-AX4. Programmable digital input terminals are activated when turned ON. If one terminal is turned OFF, all motors will start running except the motor connected to the OFF terminal. If the input signal is turned OFF during running inverter stops all the motors and restarts the operation with normal active motors. Displayed only when APP-01 is set to “MMC”.
		See Also: N/A
	APP-71 (Aux Su Diff) - V2 & V2.5 Only	Default: 2 [%] Range: 0 to 100%
		Pressure Difference for Aux Motor Start Sets the pressure difference between when the auxiliary motors are ON and auxiliary motor starting frequency. Displayed only when APP-01 is set to “MMC”.
		See Also: N/A
	APP-72 (Aux Stp Diff) - V2 & V2.5 Only	Default: 2 [%] Range: 0 to 100%
		Pressure Difference for Aux Motor Stop Sets the pressure difference between when the auxiliary motors are ON and auxiliary motor stopping frequency. Displayed only when APP-01 is set to “MMC”.
		See Also: N/A

Table 7-6 Application Group Parameters Continued

Group	Number (LCD Display) Selection (Value)	Description
APP	**APP-74 (PrePID Freq) - V1 only**	Default: 0.00[Hz]
		Range: 0.00 to FN1-30[Hz]
		PrePID Reference Frequency Specifies the inverter target frequency to be output until Pre PID operation is finished when Inverter Run signal is ON and Pre PID operation is selected. Before PID operation is started, PrePID fills water in the pump and pipe.
		See Also: N/A
	APP-75 (PrePID Exit) - V1 only	Default: 0[%]
		Range: 0 to 100[%]
		PrePID Exit Level During PrePID operation, when the PID feedback signal exceeds this value, PrePID operation ends and PID begins.
		See Also: N/A
	APP-76 (PrePID dly) - V1 only	Default: 600[sec] Range: 0 to 9999[sec]
		PrePID Stop Delay When feedback value is less than APP-24 value even though time set in APP-25 elapses, inverter signals system malfunction. It can be set by the user to fit the system in use.
		See Also: APP-23, APP-24, APP-26, Chapter 8 - Customizing Your Application
	APP-80 (Ext PI Mode)	Default: No
	No	Not selected
	Yes	Selected
		Ext PID Operation Selection APP-80 to 96 setting value is the same as APP-02 to 17. Ext PID can be used for controlling other system independently as an external PID controller using both PID controller in APP-02 and External PID controller using Ext PID output as an Inverter target frequency. See APP-02, APP-80 (to use Dual PID operation) for more details.
		See Also: N/A
	APP-81 (ExtPI RefSel)	Default: Keypad
	I	Current source
	V1	Voltage source
	Pulse	Pulse source
	Keypad	Keypad source
		Ext PID Reference Signal Selection Can be set when APP-81 [Ext PID Ref selection] is set to “Keypad”.
		See Also: N/A
	APP-82 (Ext PI Ref%)	Default: 50.00[%] Range: 0.00 to 100.00[%]
		Ext PID Reference Level In Keypad mode, this sets the reference for Ext PID.
		See Also: N/A

Table 7-6 Application Group Parameters Continued

Group	Number (LCD Display) Selection (Value)	Description
APP	APP-83 (ExtPI FbkSelz)	Default: I
	I	Current source
	V1	Voltage source
	Pulse	Pulse source
		Ext PID Feedback Signal Selection
		See Also: N/A
	APP-85 (ExtPID Pgain)	Default: 1.0% Range: 0.0 to 999.9[%]
		Proportional (P) Gain for Ext PID Controller Sets the P Gain for the Ext PID Controller.
		See Also: N/A
	APP-86 (ExtPID ITime)	Default: 10.0[sec] Range: 0.0 to 32.0[sec]
		Integral Time (I) Gain for Ext PID Controller Sets the I Gain for the Ext PID Controller.
		See Also: N/A
	APP-87 (ExtPID DTime)	Default: 0[mSec] Range: 0 to 2000[mSec]
		Differential Time (D) Gain for Ext PID Controller Sets the D Gain for the Ext PID Controller.
		See Also: N/A
	APP-88 (ExtPID Lmt-H)	Default: 100.00[%] Range: 0 to 100[%]
		High Limit Frequency for Ext PID Control Sets the upper output frequency limit through the Ext PID Controller.
		See Also: N/A
	APP-89 (ExtPID Lmt-L)	Default: 0[%] Range: 0 to 30[%]
		Low Limit Frequency for Ext PID Control Sets the lower output frequency limit through the Ext PID Controller.
		See Also: N/A
	APP-90 (ExtPID Scale)	Default: 100.0[%] Range: 0.0 to 999.9[%]
		Ext PID Output Scale
		See Also: N/A
	APP-91 (ExtPI P2Gain)	Default: 100.0[%] Range: 0.0 to 999.9[%]
		Ext PID P2 Gain
		See Also: N/A
	APP-92 (ExtPI PScale)	Default: 100[%] Range: 0 to 100[%]
		Ext PID P Gain Scale
		See Also: N/A

Table 7-6 Application Group Parameters Continued

Group	Number (LCD Display) Selection (Value)	Description
APP	**APP-93 (ExtPI FFwdGn)**	Default: 0.0[%] Range: 0.0 to 999.9[%]
		Feed Forward (F) Gain for Ext PID Controller
		See Also: N/A
	APP-95 (Ext PID Output Inverse)	Default: No
	No	Not selected
	Yes	Selected
		ExtPI OutInv
		See Also: N/A
	APP-97 (ExtPI LoopTm)	Default: 100[mSec] Range: 50 to 200[mSec]
		Ext PID Loop Time Sets the time to activate Ext PID controller. Set the desired value according to system.
		See Also: N/A

7.8 Extension Group Parameters

Table 7-7 Extension Group Parameters

Group	Number (LCD Display) Selection (Value)	Description
EXT	**EXT-00 (Jump Code)**	Default: 1 Range: 1 to 45
		Jump to Desired Code within the EXT Group
		See Also: N/A
	EXT-01 (Sub B/D)	Default: Read Only Range: Sub to E
		Type of SUB Board
		See Also: N/A
	EXT-40 (Opt1CO1Slct)	Default: Frequency
	Frequency	Hertz
	Current	Amps
	Voltage	Volts
	DC Link Voltage	DC Bus Volts
	Ext PID Out	External PID Output
		Current Output Terminal 1 (CO1) Selection
		See Also: N/A
	EXT-41 (Opt1CO1Gain)	Default: 100% Range: 10 to 200[%]
		Adjust Gain of Current Output Terminal 1 (CO1)
		See Also: N/A
	EXT-42 (Opt1CO1Offst)	Default: 0[%] Range: 0 to 100[%]
		Adjust Offset of Current Output Terminal 1 (CO1)
		See Also: N/A
	EXT-43 (Opt1CO2Slct)	Default: Frequency
	Frequency	Hertz
	Current	Amps
	Voltage	Volts
	DC Link Voltage	DC Bus Volts
	Ext PID Out	External PID Output
		Current Output Terminal 2 (CO2) Selection
		See Also: N/A
	EXT-44 (Opt1CO2Gain)	Default: 100[%] Range: 10 to 200[%]
		Adjust Gain of Current Output Terminal 2 (CO2)
		See Also: N/A
	EXT-45 (Opt1CO2Offst)	Default: 0[%] Range: 0 to 100[%]
		Adjust Offset of Current Output Terminal 2 (CO2)
		See Also: N/A

7.9 Communications Group Parameters

Table 7-8 Communications Group Parameters

Group	Number (LCD Display) Selection (Value)	Description
COM	**COM-00 (Jump Code)**	Default: 1 Range: 1 to 60
		Jump to Desired Code within COM Group
		See Also: N/A
	COM-01 (Opt B/D)	Default: Read Only
	RS485	
		Type of SUB Board
		See Also: N/A
	COM-02 (Opt Mode)	Default: None
	None	
	Command	Start/Stop/Mode
	Frequency	Speed Reference
	Cmd+Freq	Both Start/Stop and Speed Reference
		Option Mode
		See Also: N/A
	COM-03 (Opt Version)	Default: Read Only Range: Ver X.X
		Option Version
		See Also: N/A
	COM-60 (Parity/Stop)	Default: 8 None/1 Stop
	8 None/1 Stop	
	8 None/2 Stop	
	8 Even/1 Stop	
	8 Odd/1 Stop	
		Parity/Stop Bits
		See Also: N/A
	COM-61 (Opt Para-1)	Default: 0
	COM-62 (Opt Para-2)	Default: 0
	COM-63 (Opt Para-3)	Default: 0
	COM-64 (Opt Para-4)	Default: 0
	COM-65 (Opt Para-5)	Default: 0
	COM-66 (Opt Para-6)	Default: 0
		Range: 0 to FFFF
		Opt Para-1 thru Opt Para-6
		See Also: N/A
	COM-67 (Comm Up Date)	Default: 0
	0	No
	1	Yes
		To initiate Comm Up Date after any change
		See Also: N/A

Chapter 8

Customizing For Your Application

This section is used to describe certain functions within the VS1PF in greater detail. Examples of information included in this chapter are PID, Autotune, Auto Restart, Custom V/Hz Curves and Sensorless Vector Control.

8.1 Setting Protection & Trip Levels

Table 8-1 Setting Protection & Trip Levels

Parameter Name	Code	Description
Electronic thermal	FN1-60 FN1-61 FN1-62 FN1-63	Protects the motor from overheating without the use of an external thermal relay. Refer to parameter descriptions for more detail.
Overload alarm & trip	FN1-64 FN1-65 FN1-66 FN1-67 FN1-68	Warning alarm actuates and trip message is displayed when current above the threshold limit is detected for a prolonged period.

8.2 Setting Starting/Accel/Decel/Stopping Patterns

Table 8-2 Setting Starting/Accel/Decel/Stopping Patterns

Parameter Name	Code	Description
Accel/Decel pattern	FN1-02 FN1-03	3 types of Accel/Decel pattern: Linear, S-curve, U-curve
Starting/Stopping method	FN1-20 BAS-12	4 types of stopping method
Frequency Limit selection	BAS-06 BAS-07	Limits the active frequency. Inverter operates at the freq range between upper freq limit [BAS-07] and lower freq limit [BAS-06]. If a higher or lower freq value is entered, it is automatically replaced by the limit value. Setting range: [BAS-07] Maximum freq to [FN1-32] starting freq.

8.3 Operation-starting Method

Table 8-3 Operation-starting Method

Parameter Name	Code	Description
Starting method	FN2-20 FN2-21 FN2-25 FN2-26	Motor starting method: [FN2-20] Power-on run, [FN2-21] Restart after Fault Reset, [FN2-25] Number of Auto Restart Attempts [FN2-26] Delay Time Before Auto Restart See parameter description for more details.
Speed Search Selection	FN2-22 FN2-23 FN2-24	Speed search function is available during Accel, trip, momentary power failure, restart after fault reset and Speed search at auto restart. See parameter description for more details.

8.4 Setting Application Function

8.4.1 PID operation

Inverter can be used to maintain process control, e.g. flow rate, air volume or pressure via PID feedback control.

Table 8-4 PID Parameters

Parameter Name	Code	Description
PID control setting	APP-02 to APP-25 **(V2 & V2.5)**	Parameters for PID control setting
	APP-02 to APP-17 **(V1 only)**	

See Section 8.12.

8.4.2 Ext PID operation

External PID feedback control.

Table 8-5 External PID Parameters

Parameter Name	Code	Description
ExtPID setting	APP-80 to APP-97	Parameters for Ext PID

External PID provides a second PID Loop. Setup is the same as primary PID.
See Section 8.12 for more information.

8.4.3 Pre PID Operation

Helps to smooth the start of the PID control.

Table 8-6 Pre PID Parameters

Parameter Name	Code	Description
PrePID setting	APP-23 to APP-25 **(V2 & V2.5 only)**	Parameters for Pre PID operation
	APP-74 to APP-76 **(V1 only)**	

The Pre-PID function is useful in providing a startup period where the PID is inactive thus allowing for stabilization of the process before the PID is enabled. An example may be where you start up a pump at a minimum speed thus allowing the piping to fill up with fluid prior to releasing the control to the PID loop.

8.5 Jog and Multi-speed Operation

Table 8-7 Jog and Multi-speed Operation

Parameter Name	Code	Description
Multi function input terminal setting	I/O-20 to I/O-27	If I/O-20 to 27 are set by Speed-H, Speed-M, Speed-L, multi- speed operation up to 17 speeds is available.
Filter time constant for input terminal	I/O-29	Effective for eliminating noise problems on the digital inputs.
Speed reference value	DRV-05 to DRV-07 I/O-31 to I/O-42	Speed reference value for each preset speed
Accel/Decel time setting for each step	I/O-50 to I/O-63	Accel/Decel time for each preset speed
Jog freq.	I/O-30	Jog freq for jog operation setting

Table 8-8 Speed Reference Selection

Speed-X	Speed-H	Speed-M	Speed-L	JOG	Speed Command	Parameter value
0	0	0	0	0	Main Speed Ref	n/a
X	X	X	X	1	Jog Speed	I/O-30
0	0	0	1	0	Preset Speed 1	DRV-05
0	0	1	0	0	Preset Speed 2	DRV-06
0	0	1	1	0	Preset Speed 3	DRV-07
0	1	0	0	0	Preset Speed 4	I/O-31
0	1	0	1	0	Preset Speed 5	I/O-32
0	1	1	0	0	Preset Speed 6	I/O-33
0	1	1	1	0	Preset Speed 7	I/O-34
1	0	0	0	0	Preset Speed 8	I/O-35
1	0	0	1	0	Preset Speed 9	I/O-36
1	0	1	0	0	Preset Speed 10	I/O-37
1	0	1	1	0	Preset Speed 11	I/O-38
1	1	0	0	0	Preset Speed 12	I/O-39
1	1	0	1	0	Preset Speed 13	I/O-40
1	1	1	0	0	Preset Speed 14	I/O-41
1	1	1	1	0	Preset Speed 15	I/O-42

Table 8-9 Speed Reference Selection (V2 & V2.5 only)

Jog	Firestat	Freezestat	Resulting Speed Command	Mode
D1 M6	D1 M1	D1 M2		
Open	Closed	Closed	Run from Normal Speed Reference	
Closed	Closed	Closed	Run from Jog Speed Reference I/O-30	
Open	Closed	Open	Run at Preset Speed 2 DRV-06	Freezestat
Closed	Closed	Open	Run at Preset Speed 2 DRV-06	Freezestat
Open	Open	Closed	Run at Preset Speed 1 DRV-05	Firestat
Closed	Open	Closed	Run at Preset Speed 1 DRV-05	Firestat
Open	Open	Open	Run at Preset Speed 1 DRV-05	Firestat
Closed	Open	Open	Run at Preset Speed 1 DRV-05	Firestat

8.6 2nd Motor Operation

2nd function setting is used to run the two motors using one inverter by reconnection of the drive output to a 2nd motor using, for example, contactors.
If the terminal defined for 2nd function signal input is turned ON, 2nd motor operation is valid. Only one motor is controlled at any one time.

Table 8-10 2nd Motor Operation

Parameter Name	Code	Description
Programmable Digital Input terminals setting	I/O-20 to I/O-27	2nd motor operation is available with Programmable Digital Input terminals M1 to M8 set to 7 {2nd Func}.
Parameter setting for 2nd motor operation	APP-30 to APP-39 **(V2 & V2.5 only)**	Setting parameters necessary to operate 2nd motor such as base freq., Accel/Decel time, Stall.
	APP-20 to APP-29 **(V1 only)**	

8.7 Energy-saving Operation

FN1-51 [Energy Save Level] adjusts the inverter output voltage to minimize the inverter output voltage during steady-state speed operation. Appropriate for energy-saving applications such as fan, pump and HVAC.

8.8 Operation Examples

Note: -10~+10V mode enables Forward/Reverse rotation using ±12V power via Analog input command. Refer to Chapter 7, Parameter description of BAS-09 for details.

Note: Use 0~+10V instead of -10V~+10V mode when FWD/REV Run Prevention is active. -10V~+10V mode enables the motor to run both FWD/REV directions.

Note: If the inverter is operated without a motor wired to it, trip occurs (as shown below) because the protection function is active by default. In this case, refer to the related parameters (FN1-57 to 59). To reset the trip, cycle power on the inverter.

Figure 8-1

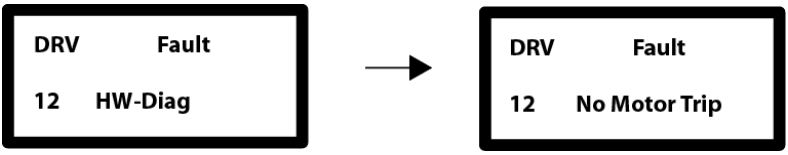

If a simple trial run is needed without wiring a motor, such as to check on basic operation state, FN1-57(No Motor Sel) will need to be changed to [No] because the factory default is [Yes]. **(V2 Only)**

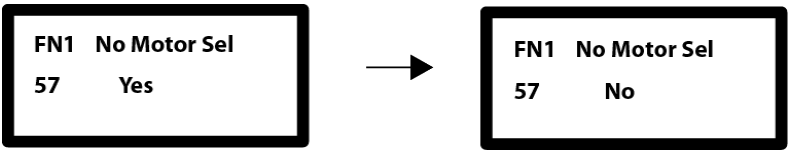

Figure 8-2 Operation Example 1

Operation Example (1)	V/F Control + Analog Voltage Input (0~+10V) + Operation via Terminal (FX/RX)

[Operation condition]
- Control mode: V/F control
- Frequency command: 50[Hz] analog input via V1 terminal
- Accel/Decel time: Accel = 15 [sec], Decel = 25 [sec]
- Drive mode: Run/Stop via FX/RX terminal, Control terminal: Sink (NPN) mode

[Wiring]

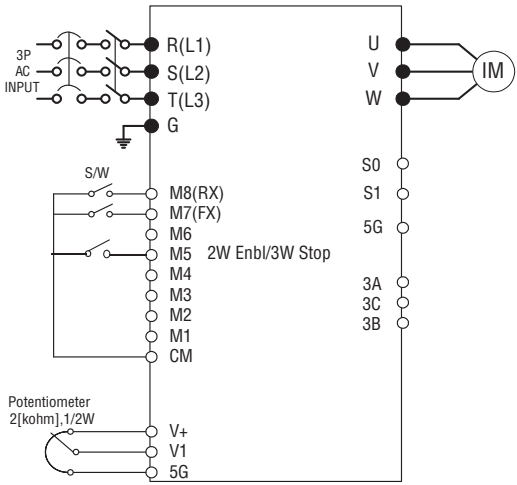

Step	Parameter setting	Code	Description
1	Control Mode Selection	FN2-60	Set to {V/F}.
2	Start/Stop Source	BAS-08	Set to 2-wire Cntl.
3	Speed Reference Source	BAS-09	Set to “0~+10V”.
4	50[Hz] freq command setting	n/a	Set freq command 50[Hz] via V1 (potentiometer).
5	Accel/Decel time	BAS-10 BAS-11	Set Accel time to 15 [sec] in BAS-10. Set Decel time to 25 [sec] in BAS-11.
6	Terminal FX	I/O-26	Motor starts to rotate in Forward direction at 50Hz with Accel time 15 [sec] when FX terminal is turned ON. Motor decelerates to stop with Decel time 25[sec] when FX terminal is turned OFF.
7	Terminal RX	I/O-27	When RX terminal is turned ON motor starts to rotate in Reverse direction at 50[Hz] with Accel time 15 [sec]. When it is OFF, motor decelerates to stop with Decel time 25 [sec].

Figure 8-3 Operation Example 2

Operation Example (2)	2nd motor operation

[Operation condition]
- Control mode: V/F control
- 1st motor + 2nd motor Operation by exchange using [2nd Func] (Set Value different)
- Frequency command: Using Multi-step operation 1st motor --- 50[Hz] as main speed
2nd motor --- 20[Hz] with M1 terminal set as multi-step operation)
- Accel/Decel time: 1st motor --- Accel time: 15[sec], Decel time: 25 [sec]
2nd motor --- Accel time: 30[sec], Decel time: 40 [sec]
- Drive mode: Run/Stop via FX/RX, Control terminal: sink (NPN) mode

[Wiring]

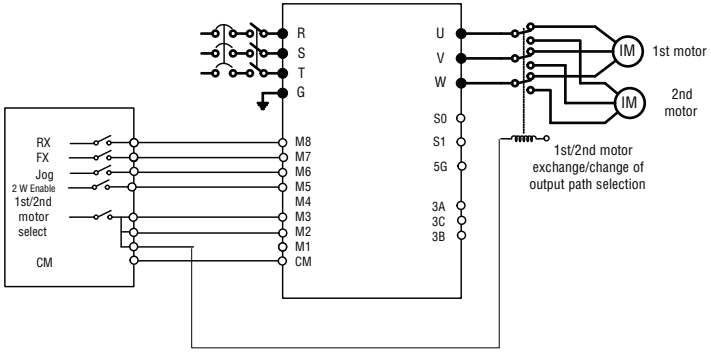

Step	Parameter setting	Code	Description
1	Control Mode Selection	FN2-60	Set to {V/F}.
2	Start/Stop Source	BAS-08	Set to 2-wire Cntl.
3	Speed Reference Source	BAS-09	Set to {keypad}. 1st Motor Freq Setting.
4	Programmable digital input terminal M2	I/O-21	Set M2 to 2nd Func.
5	Programmable digital input terminal M3	I/O-22	Set M3 to Speed-L. 2nd Motor Freq setting.
6	Freq for 1st motor	n/a	Set to 50[Hz].
7	Accel/Decel time for 1st motor	BAS-10 BAS-11	Set Accel/Decel time to 15[sec]/25[sec].
8	Freq for 2nd motor	DRV-05	Set to 10[Hz].
9	Accel/Decel time for 2nd motor	APP-30,-31 (V2 & V2.5) APP-20,-21 (V1)	Set Accel/Decel time to 30[sec]/50[sec].
10	1st motor operation		Set as main motor by turning M2, M3, Output relay OFF. Run the motor in FWD/REV direction using FX/RX terminal.
11	2nd motor operation		Set 2nd motor parameters by turning terminal M2 ON. Change the freq setting to 20[Hz] by turning terminal M3 ON. Change to 2nd motor terminal by turning output relay ON. Run the motor in FWD/REV direction by terminal FX/RX.

Figure 8-4 Operation Example 3

Operation Example (3)	V/F control + Analog input (-10V~+10V) + Operation via terminal FX/RX

[Operation condition]
- Control mode: V/F control
- Frequency command: Setting 50[Hz] via Analog input (V1S)
- Accel/Decel time: Accel time 15 [sec], Decel time 25 [sec]
- Drive mode: Run/Stop via FX/RX, Control terminal: NPN mode

[Wiring]

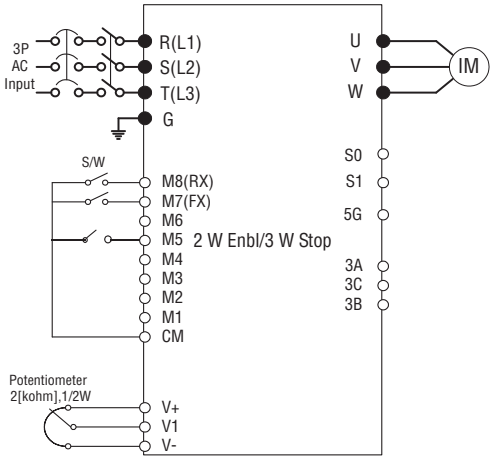

Step	Parameter setting	Code	Description
1	Control mode selection	FN2-60	Set to {V/F}.
2	Start/Stop Source	BAS-08	Set to {2-Wire Cntl}.
3	Speed Reference Source	BAS-09	Set to {-10V~+10V}.
4	Set Operating frequency command 50[Hz]	n/a	Set 50[Hz] via potentiometer (V1S).
5	Set Accel/Decel time	BAS-10 BAS-11	Set Accel time to 15[sec] in BAS-10 and decel time to 25[sec] in BAS-11.
6	FX terminal (M7)	IO-26	When FX terminal is turned ON, motor rotates in forward direction accelerating to 50[Hz] in 15 [sec]. When FX terminal is turned OFF, motor decelerates to stop in 25[sec].
7	RX terminal (M8)	IO-27	When RX terminal is turned ON, motor rotates in reverse direction accelerating to 50[Hz] in 15[sec]. When RX terminal is turned OFF, motor decelerates to stop in 25[sec].

8.9 Frequency Mode

8.9.1 Keypad Frequency Setting

Table 8-11 Keypad Speed Reference

Group	Code	Parameter Name	Setting	Range	Initial	Unit
Basic Group	n/a	[Frequency Command]	-	0 to 120	0.00	Hz
	BAS-09	Speed Reference Source	Keypad	Keypad 0 ~ +10V -10V~+10V 4~20mA 0~10V+4~20mA Pulse Int. 485 Ext. PID	Keypad	
Set BAS-09 [Speed Reference Source] to “Keypad”.						
From the operation mode, use the UP/DOWN arrow keys to set the frequency.						
The value can not be set above BAS-07 [Maximum Frequency].						

8.9.2 Frequency Setting via –10 to +10[V] Input

Table 8-12 Bipolar Speed Reference

Group	Code	Parameter Name	Setting	Range	Initial	Unit
Basic Group	n/a	[Frequency Command]	-	0 to 120	0.00	Hz
	BAS-09	[Speed Reference Source]	-10V~ +10V	Keypad 0 ~ +10V -10V~ +10V 4~20mA 0~10V+4~20mA Pulse Int. 485 Ext. PID	Keypad	
I/O Group	I/O-2	[V1 Input Minimum Voltage]	-	0 to+10V	0.0	V
	I/O-3	[Frequency Corresponding to I/ O-2]	-	0 to BAS-07	0.00	Hz
	I/O-4	[V1 Input Max Voltage]	-	0 to+10	+10.00	V
	I/O-5	[Frequency Corresponding to I/ O-4]	-	0 to BAS-07	60.00	Hz
Set BAS-09 [Speed Reference Source] to “-10V~+10V”. The set frequency can be monitored using the speed reference monitor screen in the operation mode.						

Apply –10V to +10V signal between V1 and CM terminal.

Figure 8-5 Bipolar Reference Wiring

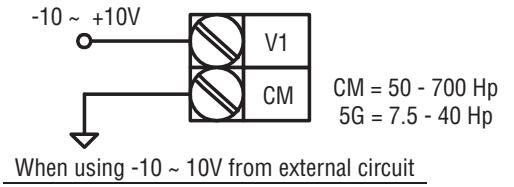

Output frequency corresponding to –10V to +10V input voltage to V1 terminal.

Figure 8-6 Bipolar Operation

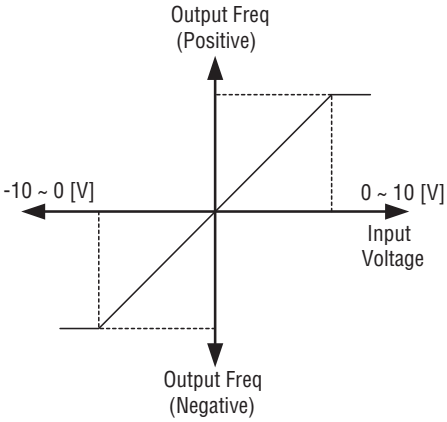

I/O-01 [Filter time constant for V1 input]: Effective for eliminating noise in the frequency reference circuit.
Increase the filter time constant if steady operation cannot be performed due to noise. A higher setting results in slower response (t gets longer).

Figure 8-7 Analog Input Filter

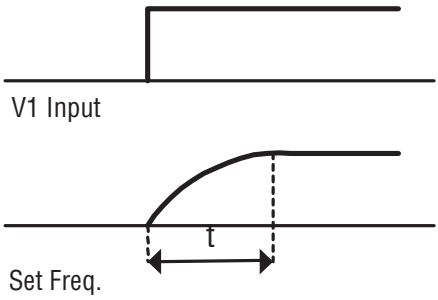

8.9.3 Frequency Setting via 0 to +10V Input or Potentiometer

Wire the terminals as shown below.

Table 8-13 Unipolar Speed Reference

Group	Code	Parameter Name	Setting	Range	Initial	Unit
Basic Group	n/a	[Frequency Command]	-	0 to 120	0.00	Hz
	BAS-09	[Speed Reference Source]	0V~ +10V	Keypad 0 ~ +10V -10V~ +10V 4~20mA 0~10V+4~20mA Pulse Int. 485 Ext. PID	Keypad	
I/O Group	I/O-01	[Filter Time Constant for V1 Input]	10	0 to 9999	10	
	I/O-02	[V1 Input Min Voltage]	-	0 to 12	0	V
	I/O-03	[Frequency corresponding to I/O-02]	-	0 to BAS-07	0.00	Hz
	I/O-04	[V1 Input Max Voltage]	-	0 to 12	10	V
	I/O-05	[Frequency Corresponding to I/O-04]	-	0 to BAS-07	60.00	Hz
Set BAS-09 [Speed Reference Source] to “0~+10V” 0-10V can be directly applied from an external controller or a potentiometer connected on terminals V+, V1 and CM.						

Wire the terminals as shown below.

Figure 8-8 Unipolar Reference Wiring

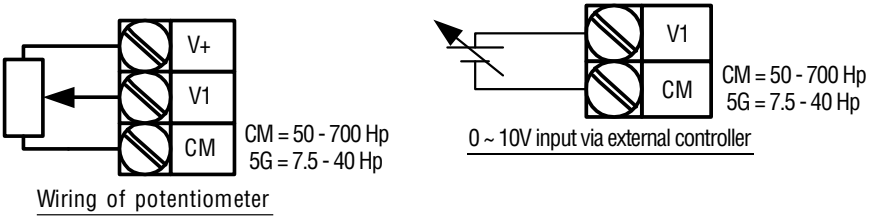

8.9.4 Frequency Setting via 4 to 20mA Input

Table 8-14 4 to 20mA Speed Reference

Group	Code	Parameter Name	Setting	Range	Initial	Unit
Basic Group	n/a	[Frequency Command]	-	0 to 120	0.00	Hz
	BAS-09	[Speed Reference Source]	4~20mA	Keypad 0 ~ +10V -10V~ +10V 4~20mA 0~10V+4~20mA Pulse Int. 485 Ext. PID	Keypad	
I/O Group	I/O-06	[Filter Time Constant for I Input]	10	0 to 9999	10	
	I/O-07	[I Input Minimum Current]	-	0 to 20	4	mA
	I/O-08	[Frequency Corresponding to I/O-07]	-	0 to BAS-07	0.00	Hz
	I/O-09	[I input Max Current]	-	0 to 20	20	mA
	I/O-10	[Frequency Corresponding to I/O-09]	-	0 to BAS-07	60.00	Hz
Step 1. Set BAS-09 [Speed Reference Source] to “4~20mA”.						
Step 2. Frequency is set via 4 to 20mA input between I and CM terminal.						

8.9.5 Frequency Setting via 0 to +10V Voltage Input + 4 to 20mA Input

Table 8-15 Speed Reference with Trim

Group	Code	Parameter Name	Setting	Range	Initial	Unit
Basic Group	n/a	[Frequency Command]	-	0 to 120	0.00	Hz
	BAS-09	Speed Reference Source	0~10V+4~20mA	Keypad 0 ~ +10V -10V~+10V 4~20mA 0~10V+4~20mA Pulse Int. 485 Ext. PID	Keypad	
Step 1. Set BAS-09 [Speed Reference Source] to “0~10V+4~20mA”.						
Step 2. Override function available using Main/Auxiliary speed adjustment						
Step 3. Related code: I/O-01 to I/O-10						

Override function allows more precise control and a faster response by combining Main and Auxiliary speed input. Fast response can be achieved via Main speed and precise control can be accomplished by Aux. speed if the accuracy of Main/Aux speed is set differently.

Follow the settings shown in the table below when Main speed is given via 4 to 20mA with Aux. speed via V1 terminal (0 to 10V).

When override function is used, select the Main/Aux. speed according to loads used.

Table 8-16 Analog Input Setup

Group	Code	Parameter Name	Setting	Unit
I/O group	I/O-02	[VI Input Min Voltage]	0	V
	I/O-03	[Frequency Corresponding to I/O-02]	0.00	Hz
	I/O-04	[VI Input Max Voltage]	10.00	V
	I/O-05	[Frequency Corresponding to I/O-04	5.00	Hz
	I/O-07	[I Input Minimum Current]	4	mA
	I/O-08	[Frequency Corresponding to I/O-08]	0.00	Hz
	I/O-09	[I Input Max Current]	20	mA
	I/O-10	[Frequency Corresponding to I/O-09]	60.00	Hz

After the above parameters are set, if 5V is applied to V1 with 12mA given to terminal I, output frequency would be 32.5Hz. If 0V is applied to V1 terminal with 12mA given to terminal I, output frequency would be 30.0Hz.

8.9.6 Frequency Setting via RS485 Communication

Table 8-17 RS485 Speed Reference

Group	Code	Parameter Name	Setting	Range	Initial	Unit
Basic Group	n/a	[Frequency Command]	-	0 to 120	0.00	Hz
	BAS-09	Speed Reference Source	Int. 485	Keypad 0 ~ +10V -10V~+10V 4~20mA 0~10V+4~20mA Pulse Int. 485 Ext. PID	Keypad	
Set BAS-09 [Speed Reference Source] to “Int. 485”. Related code: I/O-90 to I/O-94 Refer to Appendix C: RS485 communication.						

8.9.7 Operating Command via RS485 Communication

Table 8-18 RS485 Speed Reference

Group	Code	Parameter Name	Setting	Range	Initial	Unit
Basic Group	BAS-08	[Start/Stop Source]	Int. 485	Keypad 3-wire contl 2-wire cntl Int. 485	Keypad	
I/O group	I/O-90	[Inverter Number]	-	1 to 250	1	
	I/O-91	[Baud Rate]	-	1200, 2400 4800, 9600 19200, 38400	9600	
Step 1: Set BAS-09 [Speed Reference Source] to “Int. 485”.						
Step 2: Set I/O-92 to I/O-94 correctly.						
Step 3: Drive operation is performed via RS485 communication.						

8.9.8 Direction Selection via –10V to +10V Input of V1 Terminal

Table 8-19 Direction Control via Analog Input

Group	Code	Parameter Name	Setting	Range	Initial	Unit
Basic Group	BAS-09	Speed Reference Source	-10V~ +10V	Keypad 0 ~ +10V -10V~+10V 4~20mA 0~10V+4~20mA Pulse Int. 485 Ext. PID	Keypad	
	BAS-08	[Start/Stop Source]	-	Keypad 3-wire contl 2-wire cntl Int. 485	Keypad	
Set BAS-09 to “-10V~+10V”. Inverter operates per the table below regardless of Start/Stop Source setting.						

Table 8-20 Direction Control Logic

	FWD RUN Command	REV RUN Command
0 to +10 [V]	FWD RUN	REV RUN
-10 to 0 [V]	REV RUN	FWD RUN

Motor runs in Forward direction when input voltage to V1-CM is between 0 and 10[V] and FWD RUN command is active. When input voltage polarity is reversed to –10 to 0[V] during FWD RUN, motor decelerates to stop and runs in reverse direction.

Motor runs in Reverse direction when input voltage to V1-CM is between 0 and 10[V] and REV RUN command is active. When input voltage polarity is reversed to –10 to 0[V], motor decelerates to stop and runs in forward direction.

8.10 Up-Down (Electronic MOP)

Table 8-21 Up-Down (Electronic MOP)

Group	Code	Parameter Name	Setting	Range	Default	Unit
I/O Group	I/O-20 to I/O-27	[Multi-function Input Terminal M1 to M8 Selection]	Up Down	0 to 9999	See Parameter Section	
Select terminals for Up-Down operation from M-1 to M-8. If M7 and M8 are selected, set I/O-26 and I/O-27 to [Frequency Up command] and [Frequency Down command], respectively.						

Figure 8-9 Up-Down Sequencing

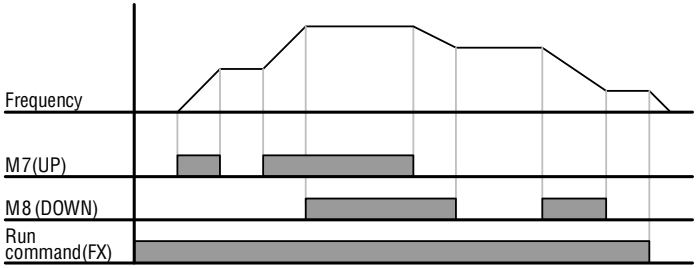

Up/Down Clear digital input resets Set Frequency to minimum if FN1-80 is set to “YES”.

8.11 3Wire

Figure 8-10 3Wire Control Connections and Operation

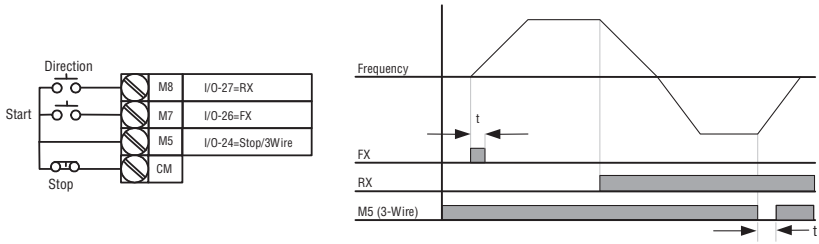

Table 8-22 3Wire Control

Group	Code	Parameter Name	Setting	Range	Default	Unit
I/O Group	I/O-20 to I/O-27	[Multi-function Input Terminal M1 to M8 Selection]		See Parameter Section	0	
Select the terminal from M-1 to M-8 for use as 3-Wire operation. Note that terminal M5 is dedicated to the Stop Input and is not programmable.						

Input signal is saved in 3Wire operation. Therefore, inverter can be operated by Push-button switch. The duration of pulse (t) should not be less than 50msec.

8.12 PID Control

APP-02: PID Operation Selection

This function can be used for Process control like flow, pressure, and air volume control.

To use this function, set APP-02 [proc PI mode] to “Yes”. PID control detects the amount of feedback from a sensor and compares it with the target value. If the values differ, this function produces an output to eliminate the deviation. In other words, this control matches the feedback amount with the target value.
For HVAC or Pump applications, the PID control can be used to adjust the actual output by comparing a feedback with a ‘Set-point’ given to the inverter. This ‘Set-point’ can be in the form of Speed, Temperature, Pressure, Flow level, etc. The ‘Set-point’ and the feedback signals are provided externally to the inverter analog input terminals. The inverter compares the signals in calculating ‘total-error’ which is reflected in the inverter output.

NOTE: PID control can be bypassed to manual operation temporarily by defining one of the multifunction input terminals (M1~M8, P4~P6) to “Open-loop”. The inverter will change to manual operation from PID control when this terminal is ON, and change back to PID control when this terminal is OFF.

[P Control] This is to compensate the error for a system input proportionally. This is used to make the controller to respond fast for an error. When P control is used alone, the system is easily affected by an external disturbance during steady state.

[I Control] This is to compensate the error of a system integrally. This is used to compensate the steady state error by accumulating them. Using this control alone makes the system unstable.

[PI control] This control is stable in many systems. If “D control” is added, it becomes the 3rd order system. In some systems this may lead to system instability.

[D Control] Since the D control uses the variation ratio of error, it has the merit of controlling the error before the error is too large. The D control requires a large control quantity at start, but has the tendency of increasing the stability of the system. This control does not affect the steady state error directly, but increases the system gain because it has an attenuation effect on the system. As a result, the differential control component has an effect on decreasing the steady state error. Since the D control operates on the error signal, it cannot be used alone. Always use it with the P control or PI control.

Parameter setting example for PID operation:

1. Set APP-02 [PID operation selection] to “Yes.”
2. Set APP-06 [PID feedback selection] to I, V1 or Pulse.
3. Set the unit to view feedback value in I/O-86~88 [User unit selection]. Then, all the units related to inverter target frequency is changed.
4. Set the appropriate value in APP-04~05 (Refer to the following PID block diagram).
5. When APP-04 is set to “No,” BAS-09 [Freq Mode] becomes PID reference. If APP-04 is set to “Yes”, the value set in APP-05 becomes PID reference. If setting one of I/O-20~27 [Programmable digital input terminal selection] to “Open loop” and turning the selected terminal On/Off, it is decided whether BAS-09 [Speed Reference Source] becomes Target freq or Target freq becomes PID Output.

Figure 8-11 PID Block Diagram (V2 & V2.5 only)

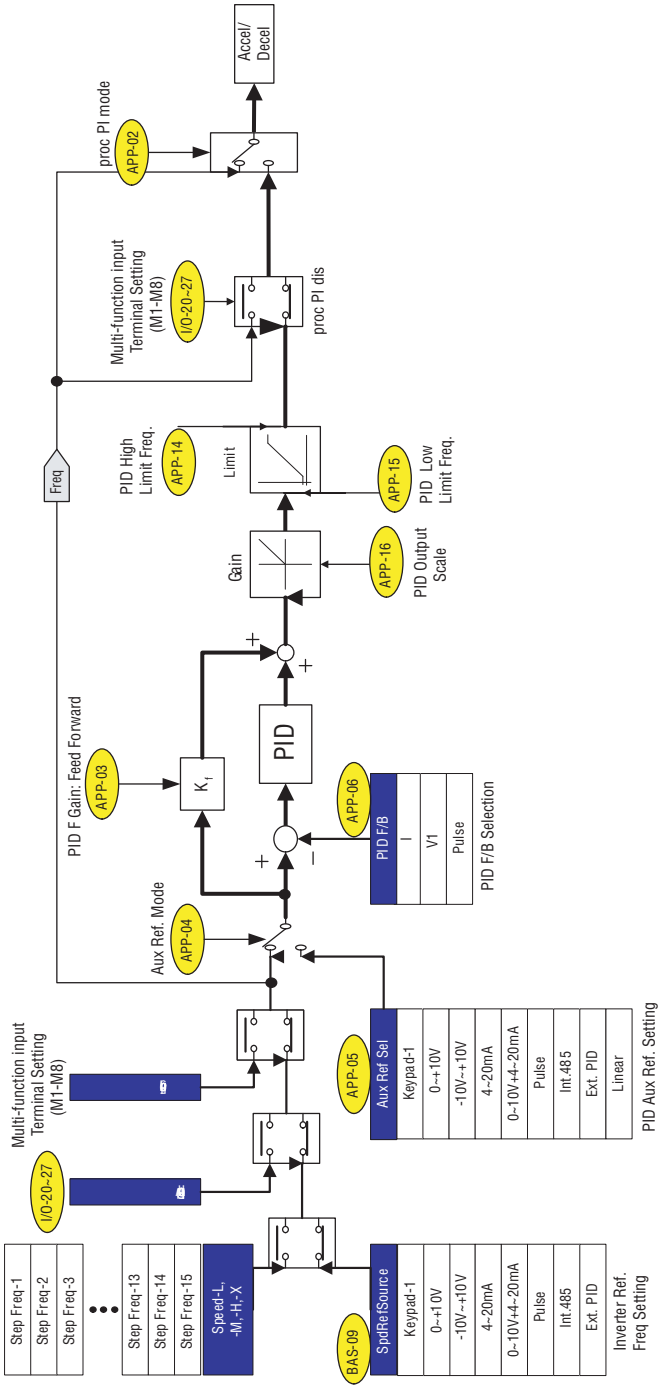

In general, the PID output becomes inverter's "Target Freq". In this case, PID is controlling the whole system and the PID output becomes the target freq of the system and inverter is operating according to Accel/Decel Time. PID control sampling time is 10msec.

Figure 8-12 (V2 & V2.5 only)

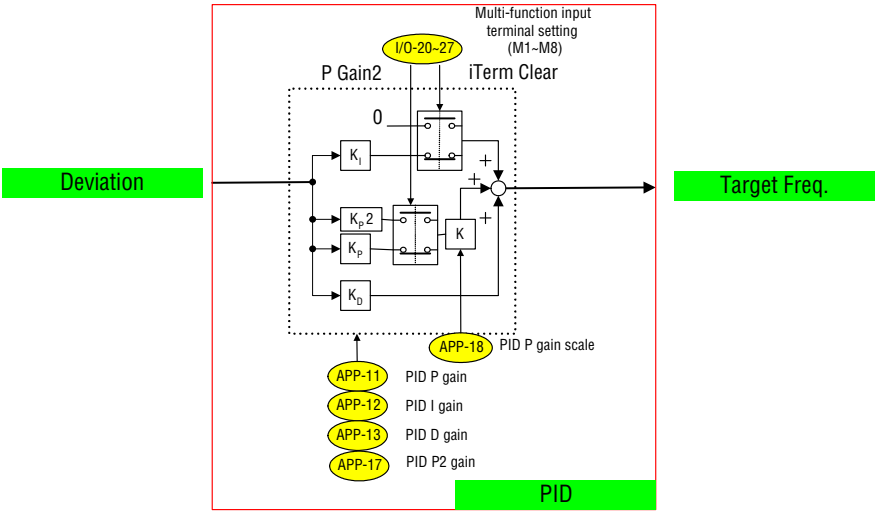

V2 & V2.5 only

When it is set to 100%, the responsiveness (%) of output F gain from the controller reference value is 100%. Used when fast response is needed.

NOTE: Control System output may become unstable if this value is set too high.

APP-04 selects PID Aux Ref.Input Enable/Disable. See PID Block Diagram for details.

APP-05 sets the source of Aux reference signal.

NOTE: When APP-04 is set to "No," BAS-09, Multi-step frequency, UP/DOWN, Jog frequency becomes PID controller's reference and when set to "Yes," PID reference is issued from the set value in APP-05 [PID Aux Reference signal selection].

APP-06: PID Feedback Signal Selection
APP-11: P Gain for PID Control
APP-12: I Time for PID Control
APP-13: D Time for PID Control
APP-14: High Limit Frequency for PID Control
APP-15: Low Limit Frequency for PID Control

APP-06 selects the feedback signal for PID control. This can be set one of 'I' (4-20mA), 'V1', 'V2' and 'Pulse' according to the signal (current or voltage) and the terminal (V1 (0-10V), V2 (Sub-B board)) or Pulse (0~100kHz). Refer to I/O-6 through I/O-10 for I; I/O-1 through I/O-5 for V1; I/O-11 through I/O-16 for Pulse; and EXT-6 through EXT-10 [V2 Analog Ref. Freq setting] for V2.

APP-11 sets the proportional gain for PID control. When P-Gain is set at 100% and I-Time at 0.0 second, it means the PID controller output is 100% for 100% error value. P-Gain is set to 50 % and I- Time to 0.0 sec, PID controller output becomes 50% for 100% error value.

APP-12 sets the integral gain for PID control. This is the time the PID controller takes to output 100% for 100% error value. For example, when it is set to 30 sec, 30 sec is taken for PID controller to output 100% for 100% error value. 100% error means feedback value is 0 to the preset reference value.

APP-13 sets the differential gain for PID control.

APP-14 is the frequency upper limit at which the output frequency is limited during PID control.

APP-15 is the frequency lower limit at which the output frequency is limited during PID control.

APP-16: PID Output Scale
APP-17: PID P2 Gain
APP-18: P Gain Scale
APP-19: PID Output Inverse
APP-20: PID U Curve Feedback Selection

APP-16 sets the scale of PID controller output.

APP-17 sets the second P-Gain for PID control.

APP-18 sets the conversion scale of P-Gain and P2-Gain.

APP-19 [Output inversion] sets PID controller's output version.

APP-20 is useful for fan and pumps application. It converts linear pattern of a feedback sensor to the squared pattern without any setting.

PID output value can be set to '0' by setting a Programmable digital input terminals (M1 ~ M8) to 'Open loop' in I/O-20 ~ I/O-27.

The accumulated value by I-Gain can be set to '0' by setting a Programmable digital input terminal (M1 ~ M8) to 'iTerm Clear' in I/O-20 ~ I/O-27.

The P-Gain 2 can be selected for PID controller by setting a Programmable digital input (I/O-20 ~ I/O-27) to 'Open-loop'.

When APP-02 [PID operation selection] is set to "Yes," a desired display unit in I/O-86, -87, -88 [User Unit selection] is set among Speed, Percent, Bar, mBar, kPa, Pa, which affects value display of APP-06 [PID feedback selection], all the parameter unit related to inverter target frequency is changed.

NOTE: When in PID mode, the first display screen will change as shown here:

Figure 8-13 (V2 & V2.5 only)

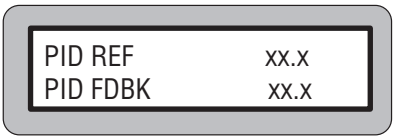

Figure 8-14 PID Wiring Example - Keypad Run/Stop and Keypad Reference

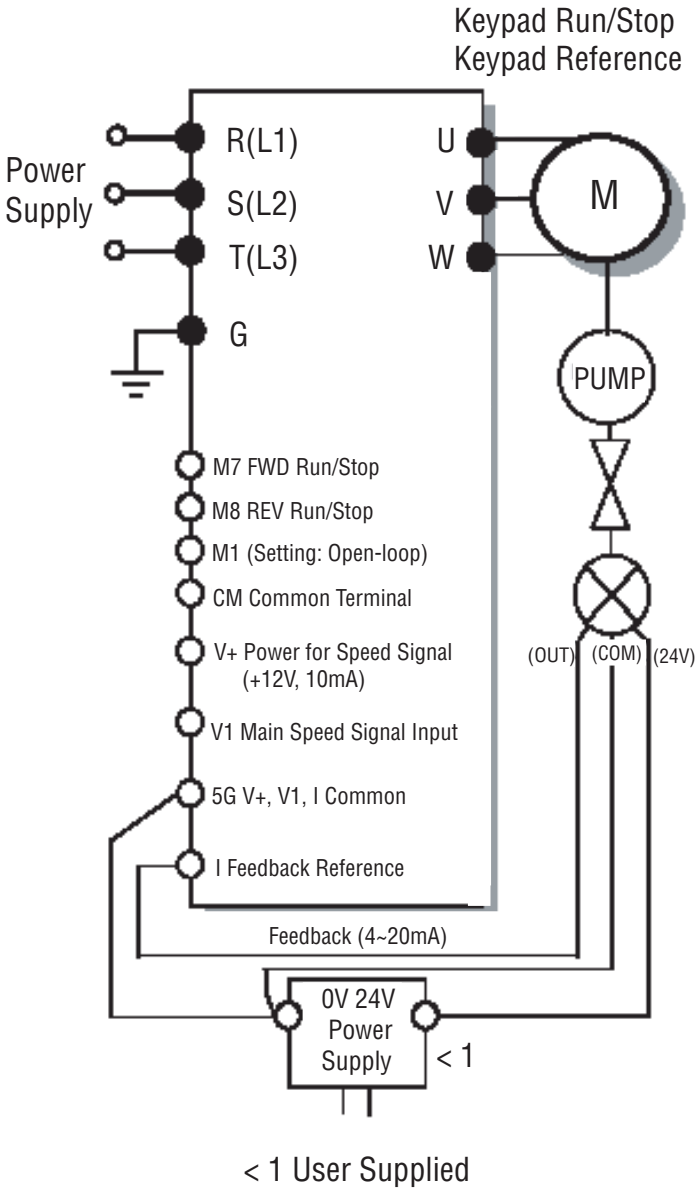

Figure 8-15 PID Wiring Example - 2Wire Run/Stop and Keypad Reference

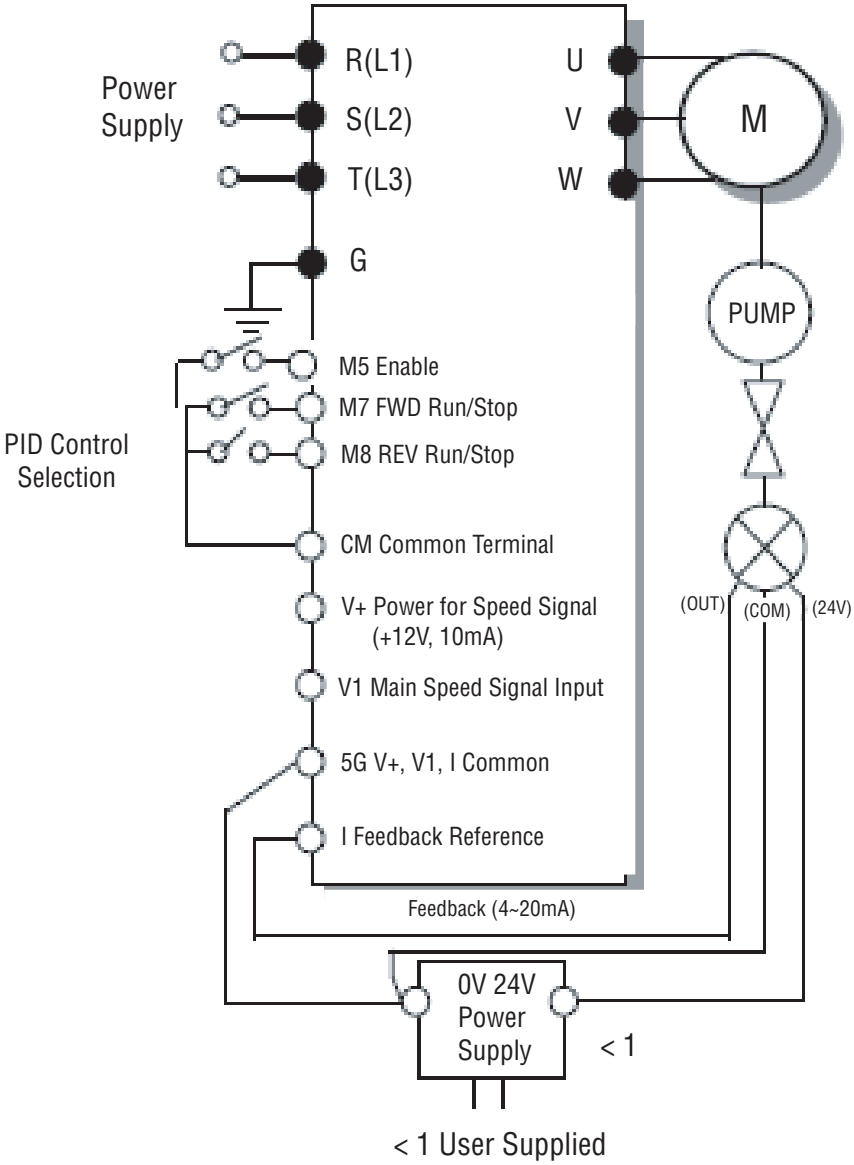

Figure 8-16 PID Wiring Example - 2Wire Run/Stop and POT = PID Reference

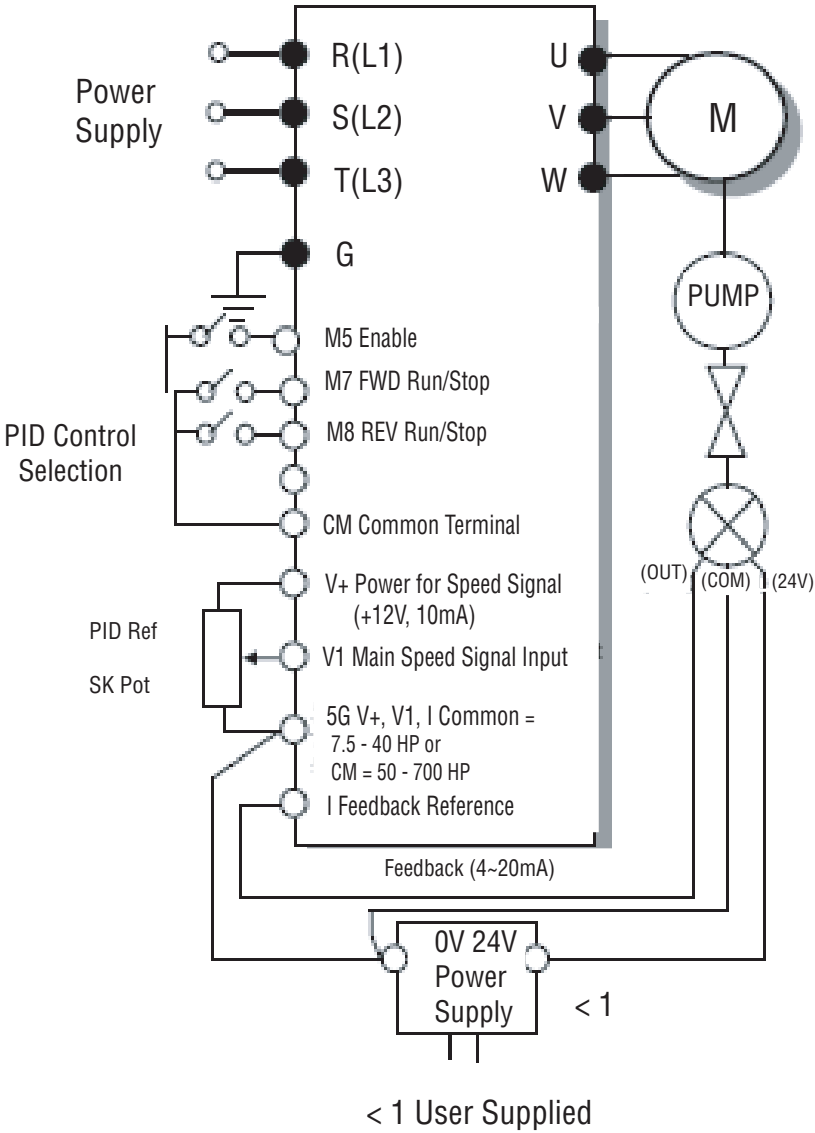

Figure 8-17 PID Block Diagram (V1 only)

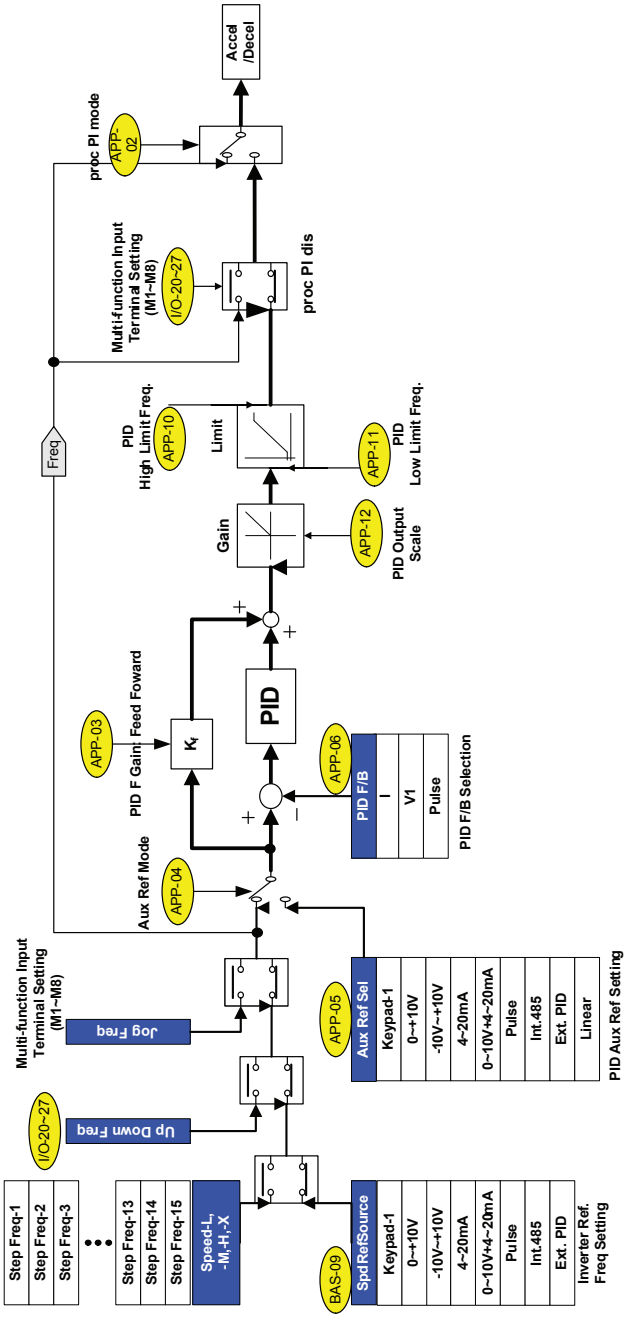

In general, the PID output becomes inverter's "Target Freq". In this case, PID is controlling the whole system and the PID output becomes the target freq of the system and inverter is operating according to Accel/Decel Time. PID control sampling time is 10msec.

Figure 8-18 (V1 only)

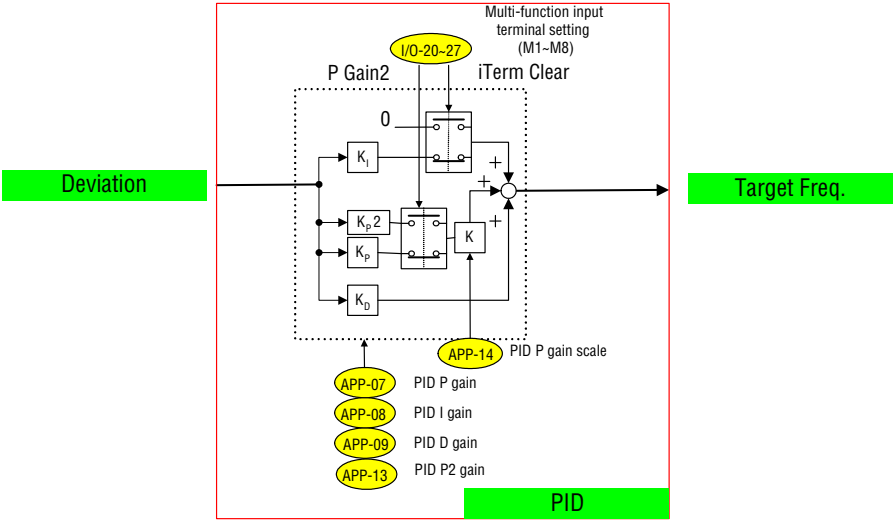

V1 Only:

When it is set to 100%, the responsiveness (%) of output F gain from the controller reference value is 100%. Used when fast response is needed.

NOTE: Control System output may become unstable if this value is set too high.

APP-04 selects PID Aux Ref. Input Enable/Disable. See PID Block Diagram for details.

APP-05 sets the source of Aux reference signal.

NOTE: When APP-04 is set to "No," BAS-09, Multi-step frequency, UP/DOWN, Jog frequency become PID controller's reference and when set to "Yes," PID reference is issued from the set value in APP-05 [PID Aux Reference signal selection].

APP-06: PID Feedback Signal Selection
APP-07: P Gain for PID Control
APP-08: I Time for PID Control
APP-09: D Time for PID Control
APP-10: High Limit Frequency for PID Control
APP-11: Low Limit Frequency for PID Control

APP-06 selects the feedback signal for PID control. This can be set one of 'I' (4-20mA), 'V1', 'V2' and 'Pulse' according to the signal (current or voltage) and the terminal (V1 (0-10V), V2 (Sub-B board)) or Pulse (0~100kHz). Refer to I/O-6 through I/O-10 for I; I/O-1 through I/O-5 for V1; I/O-11 through I/O-16 for Pulse; and EXT-6 through EXT-10 [V2 Analog Ref. Freq setting] for V2.

APP-07 sets the proportional gain for PID control. When P-Gain is set at 100% and I-Time at 0.0 second, it means the PID controller output is 100% for 100% error value. P-Gain is set to 50 % and I- Time to 0.0 sec, PID controller output becomes 50% for 100% error value.

APP-08 sets the integral gain for PID control. This is the time the PID controller takes to output 100% for 100% error value. For example, when it is set to 30 sec, 30 sec is taken for PID controller to output 100% for 100% error value. 100% error means feedback value is 0 to the preset reference value.

APP-09 sets the differential gain for PID control.

APP-10 is the frequency upper limit at which the output frequency is limited during PID control.

APP-11 is the frequency lower limit at which the output frequency is limited during PID control.

APP-12: PID Output Scale
APP-13: PID P2 Gain
APP-14: P Gain Scale
APP-15: PID Output Inverse
APP-17: PID U Curve Feedback Selection

APP-12 sets the scale of PID controller output.

APP-13 sets the second P-Gain for PID control.

APP-14 sets the conversion scale of P-Gain and P2-Gain.

APP-15 [Output inversion] sets PID controller's output version.

APP-17 is useful for fan and pumps application. It converts linear pattern of a feedback sensor to the squared pattern without any setting.

PID output value can be set to '0' by setting a Programmable digital input terminals (M1 ~ M8) to 'Open loop' in I/O-20 ~ I/O-27.

The accumulated value by I-Gain can be set to '0' by setting a Programmable digital input terminal (M1 ~ M8) to 'iTerm Clear' in I/O-20 ~ I/O-27.

The P-Gain 2 can be selected for PID controller by setting a Programmable digital input (I/O-20 ~ I/O-27) to 'Open-loop'.

When APP-02 [PID operation selection] is set to "Yes," a desired display unit in I/O-86, -87, -88 [User Unit selection] is set among Speed, Percent, Bar, mBar, kPa, Pa, which affects value display of APP-06 [PID feedback selection], all the parameter unit related to inverter target frequency is changed.

8.13 Multi Motor Control (MMC) - (Available on V2 & V2.5 only)

Note: Relay outputs are 1 Amp Max. Repeat relays may be necessary to pick up motor starters.

One VS1PF can control mulitple motors. This function is often used when controlling the rate and pressure of flow in fans or pumps. A built-in PI controller controls the main motor after receiving the process control feedback value and keeps the control value constant by connecting auxiliary motors to a commercial line when needed.

[MMC]: 'PID' control should be selected in APP-02 to use this function. A maximum of four each of the starting and stopping frequencies can be set for running up to four auxiliary motors. Refer to APP-66 and APP-68.

If the flow rate or pressure cannot be achieved by the main motor alone, up to four auxiliary motors may be sequenced ON and OFF to achieve desired control.

Auto Change can be selected to automatically switch the order of the running motors for keeping motor runtime constant.

Any motor can be skipped from running by using the Programmable digital input terminals (M1, M2, M3, and M4). If a programmable digital terminal (M1, M2, M3, or M4) is opened, the inverter stops all running motors and restarts operation with only the selected motors except the de-selected (OFF) motor. (Refer to APP-69)

Sleep function is initiated when flow demand is low. The inverter stops the motor when the motor runs below Sleep Frequency after the Sleep Delay Time. While in the sleep state, the drive keeps monitoring and initiates Wake-Up function when the real value (feedback) of the controlling amount has decreased below the Wake-Up level.

Figure 8-19

APP-58: Delay Time before Starting Aux. Motor
APP-59: Delay Time before Stopping Aux. Motor
APP-60, 61: Accel/Decel Time when the number of pumps is increasing/decreasing

APP Aux Start DT
58 5.0 sec

Factory Default: 5.0 sec

Sets the time the inverter waits before starting the auxiliary motors.

APP Aux Stop DT
59 5.0 sec

Factory Default: 5.0 sec

APP PID AccTime
60 2.0 sec

Factory Default: 2.0 sec

APP PID DecTime
61 2.0 sec

Factory Default: 2.0 sec

Sets the time the inverter waits for the input before stopping the auxiliary motors.

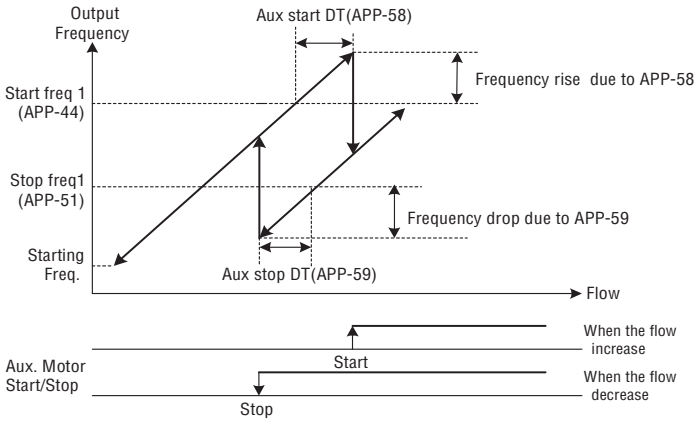

[Aux. Motor Start/Stop with MMC]

APP-60 and APP-61 changes the acceleration/deceleration time of the main motor by 0.1 sec when more or less auxiliary motors are connected.

To Use MMC Operation:

1. Select MMC in APP-01
2. Set Process PI to Yes in APP-02
3. Set Pre PID operation enable/disable
   a. Used for trial operation (to check for pipe damage, etc. before operation)
   b. Used to know the starting set point before PID operation
   c. Related Code: APP-23, 24, 25
4. Set PID Reference
   a. BAS-09 will set the PID reference source. If a different source is required, set APP-04 to YES. Then set desired reference source in APP-05.
   b. Set reference
5. Set PID Feedback input method in APP-06
   a. Set according to sensor used
   b. Analog input (4-20mA, 0-10V)
   c. Confirm that settings work
      i. Pre-operation is needed
      ii. Confirm output to feedback value is generated
6. Set the number of Aux motors in APP-43
7. Set the starting Aux motor in APP-41
8. Set the start freq of Aux motors in APP-47 through 50
9. Set the stop freq of Aux motors in APP-51 through 54
10. Start Operation

Detailed MMC Function Setting:

1. To easily identify and effectively use Process PID operation
2. To divide the usage to the motors equally - Auto Change
3. To associate other conditions with Aux motor operation - Interlock
4. Adjusting Aux motor ON/OFF condition and output (pressure, air/wind volume) variation
5. To change response characteristics:
   a. It is related to PID Control. Refer to Process PID description.

Figure 8-20

APP-69: Interlock Selection

APP Inter-lock
69 No

Factory Default: No

When APP-69 [Interlock Selection] is set to “Yes”, M1-M4 can be used as the same activating condition for AX1-AX4. Programmable digital input terminals are activated when turned ON. If one of them is turned OFF, all motors will start running except the motor connected to the off terminal. If the input signal is turned off in the midst of running, the drive stops all the motors and restarts the operation with selected motors.

Interlock during Stop
When Run signal is input during Stop, MMC operation is started with the Aux motors (Relays) turned ON.
For example, when Interlock is not selected (APP-69=NO): **RLY1>RLY2>RLY3>RLY4**;
When Interlock is active (APP-69=YES): (the terminal defined as Interlock/RLY2 is turned OFF)
RLY1 > RLY3> RLY4

Interlock during RUN
When Interlock is active during RUN (the terminal defined as interlock/RLY is turned OFF during RUN), the drive stops all motors and restarts MMC operation with aux motors except the interlocked one (terminal turned OFF). For example, normal operation: **Motor 1, 2, 3, 4**
When Interlock is active (the terminal defined as interlock/RLY3 is turned OFF), all aux motors are turned OFF and stopped. MMC operation is restarted except Aux motor 3 (RLY 3 Off).
Aux motors start rotating in order of **Motor 1, 2, 4**

Aux motor starting condition and output (Pressure, air volume.) adjustment:
Inverter turns Aux motors ON automatically when it is not possible for a main motor to control increased load, causing shortage in flow rate or flow pressure. Maximum 4 Aux motors can be used. To turn on the 4 Aux motors automatically, starting frequency for each motor should be set.

Figure 8-21

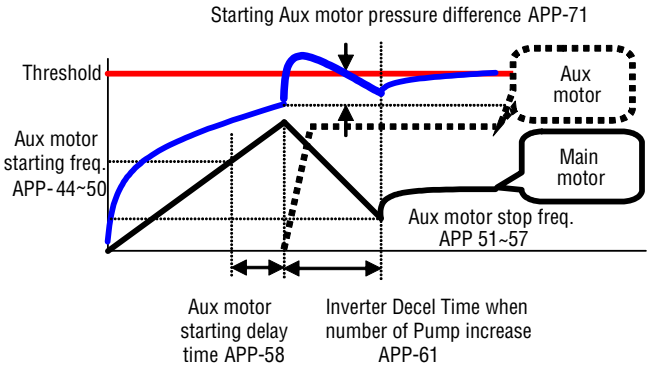

Aux motor active condition:
Main motor speed exceeds Aux motor starting frequency (APP-47~50), for the time over APP-58[Aux motor starting delay time], Difference between PID reference and Feedback value exceeds APP-71 [Starting Aux motor pressure difference].

APP-47~50: VFD Output Frequency at which the auxiliary motors will be turned ON.

APP-58: Should be set greater than system delay time.

APP-71: Percent of error needed to activate auxiliary motors.

APP-61: This is the time the drive frequency is decreased after the Aux motor is turned ON. It should be set higher than System delay time.

Aux motor stopping condition and output (Pressure, air volume) adjustment:
Inverter turns off the Aux motors when flow rate or flow pressure is too large due to decreased load. For Inverter to turn off Max 4 Aux motors automatically, 4 stopping frequencies should be set separately.

Figure 8-22

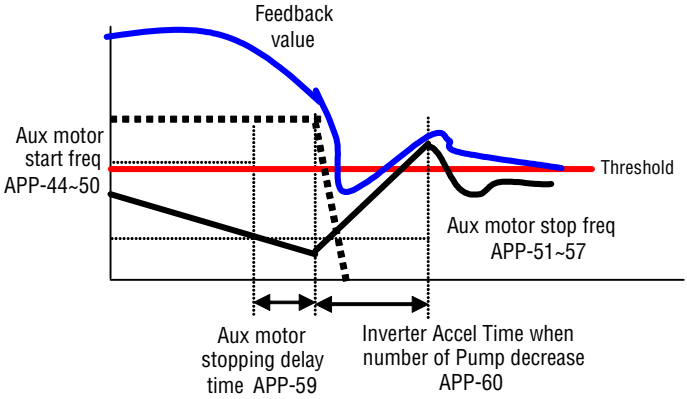

Aux motors are turned OFF when main motor goes below APP-51~54 [Aux motor stopping frequency] for the time over APP-59 [Aux motor stopping delay time] and pressure difference between PID reference and feedback value exceeds the set value in APP-71[Aux motor starting /stopping pressure difference].

APP-59: Should be set higher than System Delay Time.

APP-60: This is the time the drive frequency is increased after the Aux motor is turned OFF. It should be set higher than the System delay time.

Figure 8-23

APP-71: Pressure Difference for Aux. Motor Stop

APP Aux Pr Diff
71 2%

Factory Default: 2

8.14 Auto-Tuning

Table 8-23 Auto-Tuning

Group	Code	Parameter Name	Setting	Range	Default	Unit
Function Group 2	FN2-61	[Auto Tuning]	Yes	No Yes	No	-
	FN2-62	[Stator Resistance (Rs)]	-	Based on Drive Size	-	ohms
	FN2-63	[Leakage Inductance (Lσ)]	-	Based on Drive Size	-	mH
Motor parameters will be automatically measured. The measured motor parameters can be used in Auto Torque Boost and Sensorless Vector Control.						
Auto-tuning enables the drive and motor rotation may occur. Be certain that unexpected motor shaft movement will not cause injury to personnel or damage to equipment. Failure to observe this precaution could result in severe bodily injury or loss of life.						

FN2-61: When set to “Yes” acknowledged by pressing the Enter key, Auto tuning is activated and the parameter being tuned will appear on the LCD keypad. When finished, “No” will be displayed.

FN2-62, FN2-63: The values of motor stator resistance and leakage inductance detected during autotune are displayed, respectively. When Auto tuning is skipped or parameters are reset to factory defaults, the default value corresponding to motor size (BAS-01) will be displayed.
Press the STOP/RST key on the keypad to stop the Auto Tuning.
If Auto tuning of FN2-62 and FN2-63 is interrupted, the default value will be set.

NOTE: Accurate values for stator resistance and leakage inductance are required for optimum performance of Sensorless vector control and Auto torque boost.

8.15 Sensorless Vector Control

Table 8-24 Sensorless Vector Control

Group	Code	Parameter Name	Setting	Range	Default	Unit
Function Group 2	FN-60	[Control Mode Selection]	Sensorless	V/F Slip-Compen Sensorless	V/F	-
Basic Group	BAS-01	[Motor Nameplate HP]	-	7.5 to 700	-	HP
	BAS-05	[Motor Nameplate RPM]	-	500 to 3600	-	RPM
	BAS-04	[Motor Nameplate Current]	-	1.0 to 999.9	-	A
Function Group 2	FN2-44	[Motor No Load Current]	-	0.5 to 999.9	-	A
	FN2-62	[Stator Resistance (Rs)]	-	Based on Drive Size	-	Ohms
	FN2-63	[Leakage Inductance (Lσ)]	-	Based on Drive Size	-	mH
	FN2-64	[Pre-Excitation Time]	-	0.0 to 60.0	0.1	sec
NOTE: Motor parameters should be set properly for optimal performance. It is highly recommended FN2-61 [Auto tuning] be done prior to operating via Sensorless vector control.						

Ensure that the following parameters are entered correctly for optimal performance in Sensorless vector control.

BAS-01: Select HP of motor connected to inverter output.
BAS-05: Enter rated RPM from motor nameplate.
BAS-04: Enter motor nameplate rated current.
FN2-44: Enter the motor no load current.

If this value is unknown, follow these steps:
Step 1: After removing the load, set FN2-60[Control mode Selection] to “V/F control” and run the motor at 60Hz.
Step 2: Enter the current displayed in [Motor current] as motor no load current. If it is difficult to remove the load from the motor shaft, enter a value equal to 40 to 50% of BAS-04[Motor nameplate current] or use the factory default.

FN2-62, FN2-63: Use the value of the parameters measured during FN2-61[Auto tuning] or use the factory default. FN2-62: This parameter provides a delay prior to accelerating the motor for pre-exciting the motor. The amount of the pre-exciting current is set in FN2-44[Motor No Load Current].

8.16 Multi-function Digital Output Terminal and Fault Output Relay

Table 8-25 Digital Output Operation

Setting Range	Description
None	None
FDT-1	Output frequency arrival detection
FDT-2	Specific frequency level detection
FDT-3	Frequency detection with pulse
FDT-4	Frequency detection 1 with contact closure
FDT-5	Frequency detection 2 with contact closure
OL	Overload detection
IOL	Inverter overload detection
Stall	Stalling
OV	Over voltage detection
LV	Low voltage detection
OH	Inverter overheat detection
Lost Command	Lost command detection
Run	Inverter running detection
Stop	Inverter stop detection
Steady	Steady speed detection
INV line	By-Pass
COMM line	
Ssearch	Speed search mode detection
Ready	Inverter ready detection
MMC - **(V2 & V2.5 only)**	Used for MMC operation
Critical Trip - **(V2 & V2.5 only)**	Non-Resettable Fault
Local - **(V2 & V2.5 only)**	Detects Local or Remote operation

FDT-1
When the output frequency reaches the reference frequency (target frequency), AX-CX terminal is CLOSED.
Detecting Condition:
Value (Ref. Freq-Output Freq)<= Freq Detection Bandwidth (I/O-75)/2.

Figure 8-24 AX-CS configured as "FDT-1"

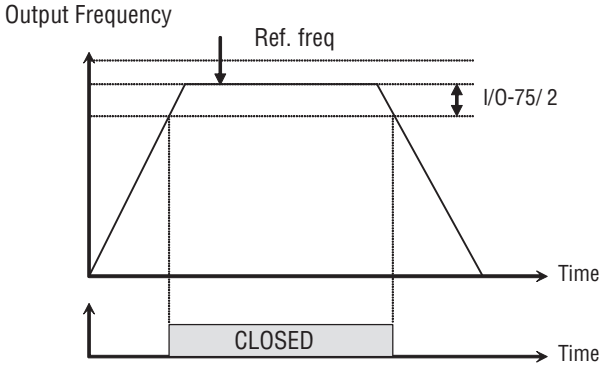

AX: A1~A4, CX: C1~C4

FDT-2
AX-CX is CLOSED when the reference frequency is in I/O-75[FDT Bandwidth] centered on I/O-74 [FDT Frequency], and the output frequency reaches I/O-75 countered on I/O-74.
Detecting Condition:
FDT-1 condition & (Value (Output Freq-Freq Detection)<=Freq Detection Bandwidth (I/O-75)/2)

Figure 8-25 AX-CX configured as "FDT-2"

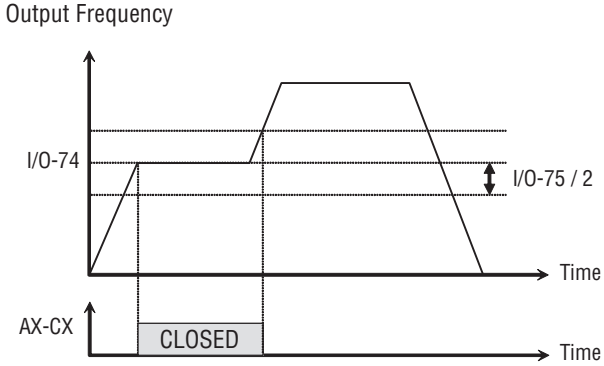

FDT-3
AX-CX is CLOSED when the output frequency reaches the band centered on the FDT frequency. The output is OPENED when the output frequency goes outside the FDT bandwidth centered on the FDT frequency.
Detecting Condition:
Value (Freq Detection (I/O-74)-Output Freq)<= Freq Detection Bandwidth (I/O-75)/2.

Figure 8-26 AX-CX configured as "FDT-3"

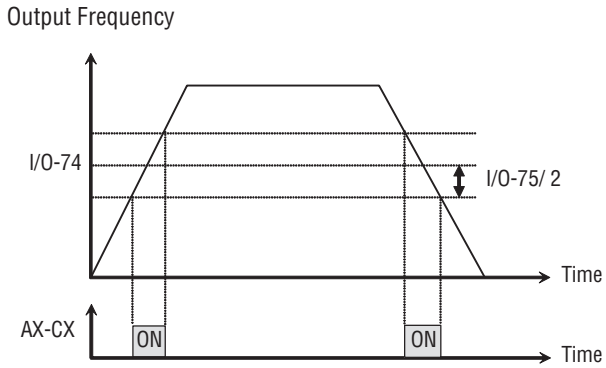

FDT-4
AX-CX is CLOSED when the output frequency reaches the FDT frequency. The output is OPENED when the output frequency goes below the FDT bandwidth centered on the FDT frequency.
Detecting Condition:
During Accel: Output freq >= Freq Detection
During Decel: Output freq > (Freq Detection (I/O-74) - Freq Detection Bandwidth (I/O-75)/2)

Figure 8-27 AX-CX configured as "FDT-4"

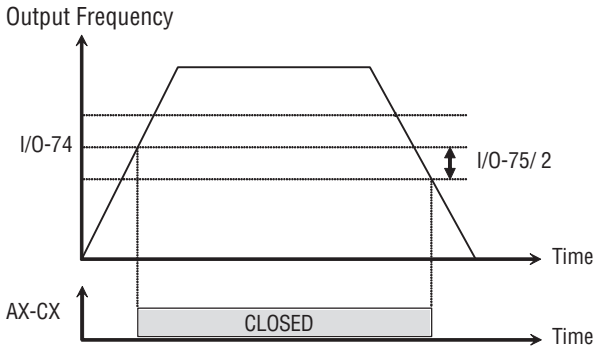

FDT-5
This is the inverted output of [FDT-4].
Detecting Condition:
During Accel: Output freq >= Freq Detection
During Decel: Output freq > (Freq Detection (I/O-74) - Freq Detection Bandwidth (I/O-75)/2)

Figure 8-28 AX-CX configured as "FDT-5"

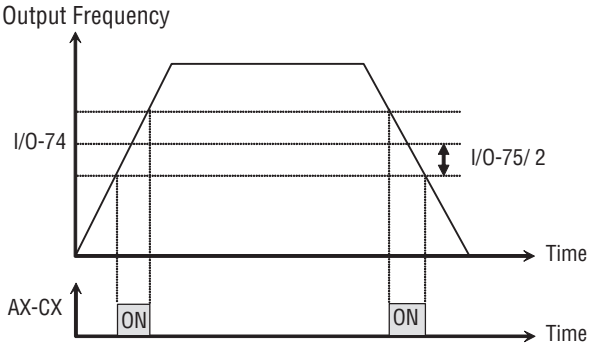

OL
AX-CX is CLOSED when the output current has reached the FU1-64 [Overload Warning Level] for the FU1-65 [Overload Warning Time].

Figure 8-29 AX-CX configured as "OL"

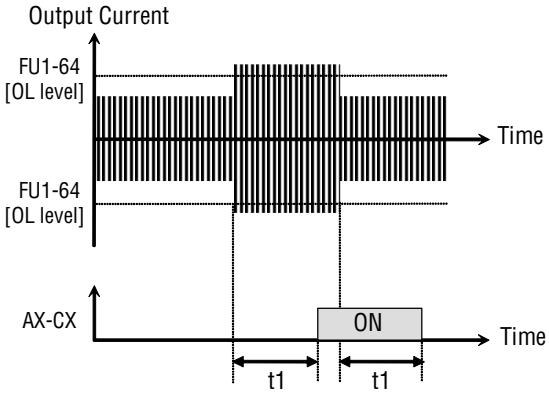

t1: FU1-65 [Overload Warning Time]

IOL
AX-CX is CLOSED when the output current is above the 110% of rated inverter current for 60 seconds. If this situation is continued for one minute, the inverter will cut off its output and displays 'IOL' (Inverter overload) Trip. See the nameplate for the rated inverter current.

Figure 8-30 AX-CX configured as "IOL"

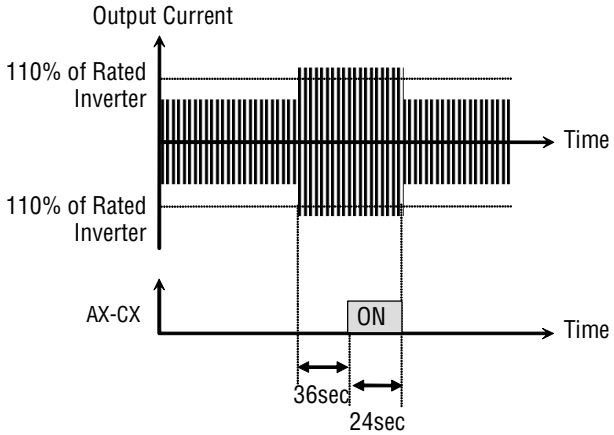

Stall
AX-CX is CLOSED when the inverter is on the stall prevention mode.

Figure 8-31 AX-CX configured as "Stall"

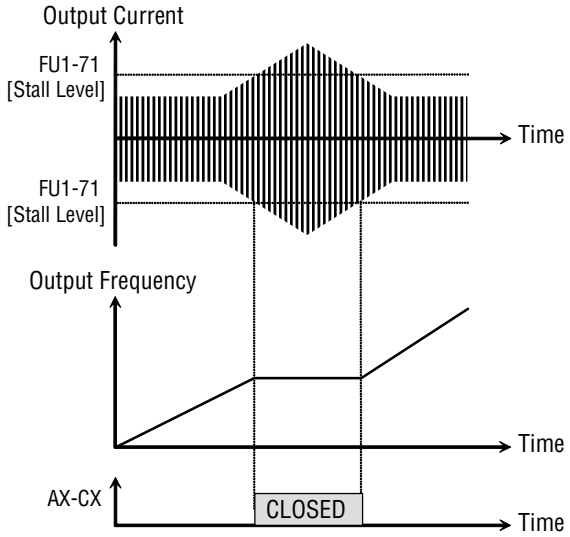

OV
AX-CX is CLOSED when the DC link voltage is above the Over-voltage level.

Figure 8-32 AX-CX configured as "OV"

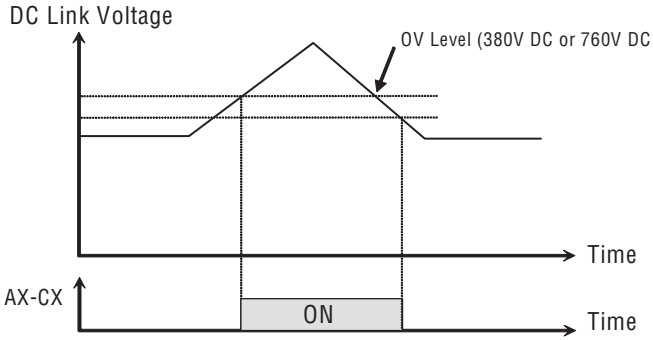

LV
AX-CX is CLOSED when the DC link voltage is below the Low-voltage level.

Figure 8-33 AX-CX configured as "LV"

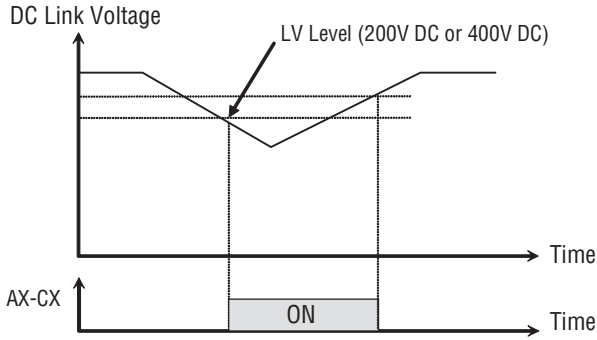

OH
AX-CX is CLOSED when the heat sink of the inverter is above the reference level.

Lost Command
AX-CX is CLOSED when frequency reference is lost.

Run
AX-CX is CLOSED when the inverter is running.

Stop
AX-CX is CLOSED when the inverter is stopped.

Steady
AX-CX is CLOSED when the inverter is running at constant speed.

INV line, COMM line
This function is used in conjunction with ‘Exchange’ function of Programmable digital input for commercial line exchange.

The following three conditions should be set:
1. Define one of the Programmable digital input terminals to “Exchange”.
2. Define one of the Programmable digital output terminals to “INV line”.
3. Define one of the Programmable digital output terminals to “COMM line”.

NOTE: Set I/O-29 above 100 msec at Exchange operation. This helps to prevent chattering and momentary malfunction.

Figure 8-34 AX-CX configured as “COMM line”, “Exchange” and “INV line”

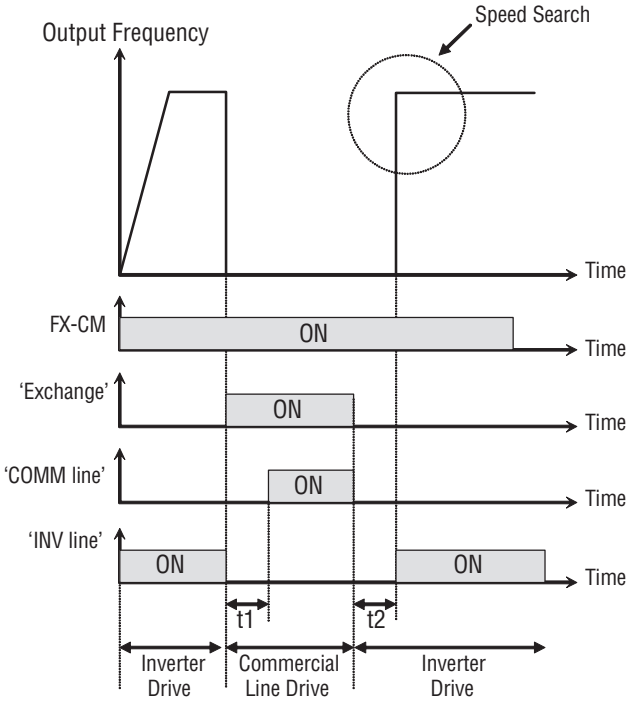

t1, t2: 500msec (interlock time)

Search
AX-CX is CLOSED during the inverter is speed searching.

Ready
AX-CX is CLOSED when the inverter is ready to run.

MMC
Automatically set to ‘MMC’ when ‘MMC’ is selected in APP-01.

8.17 I/O-80 Fault Output Relay (3A, 3B, 3C)

This function is used to allow the fault output relay to operate when a fault occurs. The output relay terminal is 3A, 3B, 3C where 3A-3C is a normally open contact and 3B-3C is a normally closed contact.

Table 8-26 Fault Relay Configuration

Bit	Setting	Display	Description
Bit 1 (LV)	0	000	Fault output relay does not operate at 'Low voltage' trip.
	1	001	Fault output relay operates at 'Low voltage' trip.
Bit 2 (Trip)	0	000	Fault output relay does not operate at any fault.
	1	010	Fault output relay operates at any fault except 'Low voltage' and 'BX' (inverter disable) fault.
Bit 3 (Retry)	0	000	Fault output relay does not operate regardless of the retry number.
	1	100	Fault output relay operates when the retry number set in FN2-25 decreases to 0 by faults. Disabled while Auto retry is ON.

When several faults occurred at the same time, Bit 1 has the first priority. (Active order: Bit 1->Bit 2->bit3)

Note: Default is 010.

8.18 Local / Remote Operation

There are 2 conditions that dictate the “Local/Remote” operation:

1. No digital input (I/O-20 - I/O-27) defined as “Loc/Rem”. This is the default condition.

   In this Default condition, Local/Remote is controlled by the OIM Local/Remote key. The drive powers up in “Remote”. In this condition, Bas-08 and Bas-09 settings determine the Control and Frequency Command of the drive. Bas-08 and Bas-09 default to Keypad. The Status display indicates “Remote”.

   When the OIM “Local/Remote” key is used to switch to “Local”, the Status screen will display “Local” and the Keypad will be the source of Control and Frequency Command of the drive.

   Even if Bas-08 and Bas-09 have been programmed to other than Keypad control, in “Local” mode, “Keypad” will be set into these 2 parameters.

2. A Digital input (I/O-20 - I/O-27) is defined as “Local/Remote”.

   In this condition, the OIM “Local/Remote” key is DISABLED.
   The Status screen will display “Local” if the digital input is Off.
   The Status screen will display “Remote” if the digital input is On.

   In “Local” Bas-08 and Bas-09 will be forced to Keypad and the Keypad is the source of Control and Frequency Command of the drive.

   In “Remote” Bas-08 will be set to the source set in DRV-91. Bas-09 will be set to the Source set in DRV-92. These Sources will control the drive.

Chapter 9

Troubleshooting and Maintenance

WARNING: **This drive contains high voltage capacitors that take time to discharge after removal of main supply. Before working on the drive, ensure isolation of main supply from line inputs. Wait ten (10) minutes for capacitors to discharge to safe voltage levels. Failure to observe this precaution could result in severe bodily injury or loss of life.**

WARNING: **Only qualified electrical personnel familiar with the construction and operation of this equipment and the hazards involved should install, adjust, operate, or service this equipment. Read and understand this manual and other applicable manuals in their entirety before proceeding. Failure to observe this precaution could result in severe bodily injury or loss of life.**

The VS1PF constantly monitors operating status and provides the following means to determine drive status and to troubleshoot problems that may occur:

- LEDS on the drive
- Fault Codes displayed on LCD display
- Drive monitor and status parameters
- Entries in the fault queue

9.1 Verifying that DC Bus Capacitors are Discharged Before Servicing the Drive

WARNING: **DC Bus capacitors retain hazardous voltages after input power has been disconnected. After disconnecting input power, wait ten (10) minutes for the DC Bus capacitors to discharge and then check the voltage with a voltmeter to ensure the DC bus capacitors are discharged before touching any internal components. Failure to observe this precaution could result in severe bodily injury or loss of life.**

The drive's DC bus capacitors retain hazardous voltages after input power has been disconnected. Perform the following steps before touching any internal components:

Step 1. Turn off and lock out input power. Wait 10 minutes after drive's LCD display goes blank.

Step 2. Open the drive's cover.

Step 3. Verify that there is no voltage at the drive's input power terminals.

Step 4. Verify that the DC Bus voltage is less than 30VDC.

Step 5. Once the drive has been serviced, reattach the drive's cover.

Step 6. Reapply input power to the drive.

9.2 Determining Drive Status Using the STP/FLT LED

The STP/FLT LED can be used to determine at a quick glance the status of the drive. If the drive is stopped, but not faulted, this LED will be illuminated solid. If the drive is running, this LED will be off. If this LED is flashing, then this indicates that the drive is faulted thus requiring attention.

9.3 Fault Codes

Fault codes indicate conditions within the drive that require immediate attention. The drive responds to a fault by initiating a coast-to-stop sequence and turning off the power to the motor.

The integral keypad provides visual notification of a fault condition by displaying the following:

- Fault code on the display. (See Table 9-2 for the fault code descriptions.)
- Flashing STP/FLT LED.

Critical Faults
Critical faults cannot be reset. There are four critical faults that can occur:

Table 9-1 Critical Faults

No Motor Trip	If FN1-57 = YES and Motor Current < FN1-58 for longer than time specified in FN1-59, a trip is generated and “No Motor Trip” message is displayed.
Input Phase Open	One or more phases of the input power is open.
Wdog Error	CPU watchdog timer failure.
Fan Lock Trip	Cooling fan is inoperative (failed). Only available for 150hp and larger.

9.3.1 Manually Clearing Faults

Step 1. Note the code of the fault condition on the display.

Step 2. Address the condition that caused the fault. Refer to Table 9-2 for a description of the fault and corrective actions. The cause must be corrected before the fault can be cleared.

Step 3. After corrective action has been taken, clear the fault and reset the drive by pressing the Stop button on the keypad or closing a digital input programmed to “RST”.

9.3.2 Automatically Clearing Faults (Auto Restart Feature)

The auto restart feature provides the ability for the drive to automatically perform a fault reset followed by a start attempt without user or application intervention. This allows remote operation when the drive may be mounted in a location that is difficult to access. This feature can only be used for auto-resettable faults.

When an auto-resettable fault occurs, and FN2-21 (Fault Reset), is set to a value of “yes”, a user configurable countdown timer, FN2-26, (Retry Delay), begins. When the time reaches zero, the drive attempts to automatically reset the fault. If the condition that caused the fault is no longer present, the fault will be reset and the drive will restart.

Table 9-2 Fault Codes, Fault Description, and Corrective Action

Keypad Text	Protective Function	Description / Possible Cause	Corrective Action
Over Current 1	Over Current Protection	The inverter disables its output when the current exceeds 200% of the rated current. **Possible Cause:** 1. Accel/Decel time too short for the inertia of the load. 2. Inverter rating too low for load requirements. 3. Starting into a rotating load. 4. Output short circuit or ground fault detected. 5. Mechanical brake applied too quickly or released too late. 6. Cooling fan failure resulting in component overtemp.	1. Increase Accel and/or Decel time. 2. Increase inverter capacity. 3. Restart only after motor has come to rest. 4. Enable Speed Search or Flying Restart function. 5. Check output wiring. 6. Check brake for proper engage/release operation. 7. Check cooling fan and heatsink. Clean as necessary.
CAUTION: Operating the drive prior to correcting the cause of the Over Current Fault may permanently damage the output IGBTpower transistors.			
Ground Fault	Ground Fault Protection	The inverter disables its output when a ground fault is detected. The ground fault trip will occur when the ground current exceeds the internal set value. An Over Current trip may occur if the cause of ground current is due to a low resistance condition. **Possible Cause:** 1. Ground condition occurred at the drive output. 2. Motor winding insulation damage. 3. Output wiring connection not insulated properly.	1. Check output power wiring for proper connection. 2. Check motor for isolation from ground. If a dielectric withstand test is performed, the motor must be disconnected from the drive output. 3. Verify that the wiring connections in the motor connection box are properly insulated.
Over Voltage	Over Voltage Protection	The inverter disables its output if the DC bus voltage exceeds the rated value. (See Technical Specifications). **Possible Cause:** 1. DC voltage may increase due to motor deceleration time too short for the load inertia. 2. High AC input voltage or surge.	1. Increase deceleration time, or add optional dynamic brake unit. 2. Check input line voltage. If necessary, add transformer.
Over Load	Current Limit Protection (Overload Protection)	The Inverter disables its output if the output current exceeds the continuous current rating for a prolonged period of time. **Possible cause:** 1. Load is larger than drive rating. 2. Incorrect V/Hz curve setting. 3. Excessive torque boost.	1. Decrease motor load. Verify load requirements match drive and motor and/or inverter capacity. 2. Select correct V/Hz curve. 3. Decrease torque boost to proper value.

Table 9-2 Fault Codes, Fault Description, and Corrective Action Continued

Over Heat	Inverter Over Heat	The inverter disables its output if the heatsink reaches its overtemperature threshold. **Possible cause:** 1. Cooling fan failure. 2. Air flow obstructed by debris. 3. Ambient temperature exceeds 40ºC, (104ºF).	1. Replace cooling fan. 2. Clean heatsink and remove obstructions from air flow channel. 3. Maintain ambient temperature below 40ºC, (104ºF).
E-Thermal	Electronic Thermal Overload	The drive internal Motor Electronic Thermal Overload operates similar to a motor thermal switch to protect the motor from overheating damage. **Attention:** If the drive is being used in an application where more than one motor is connected to the drive, each motor must have its own thermal protective device. **Possible cause:** 1. Motor overloaded 2. Drive and motor not sized correctly for the load. 3. ETH level set too low. 4. Incorrect V/Hz curve setting. 5. Low motor speed	1. Reduce driven load. 2. Install correctly rated inverter. 3. Set correct ETH parameter value. 4. Select correct V/Hz curve. 5. Raise operating speed or install externally powered motor cooling fan.
Ext. Trip	External Trip	When External Trip is enabled, the drive will disable its output if an External Trip Signal, (normally open contact), is detected. **Possible cause:** 1. Open circuit at the External Trip terminal.	1. Determine open circuit condition and correct problem, or disable External Trip function.
Low Voltage	Low Voltage Protection	The inverter disables its output if the DC Bus voltage falls below its low voltage detection level. **Possible cause:** 1. Low input line voltage. 2. Electrical loading on the AC supply excessive. 3. Phase loss on AC input.	1. Check input line voltage, add transformer if necessary. 2. Increase AC input line capacity, or reconnect to alternate branch circuit. 3. Check AC line fuses and power wiring integrity.
Over Current 2	IGBT Short	The inverter disables its output if an IGBT short is detected, or if an output short occurs. **Possible cause:** 1. Short circuit between upper and lower IGBT. 2. Short circuit at inverter output. 3. Accel or Decel time too short for attached load inertia.	1. Check IGBT's as described later in this chapter. 2. Check output wiring and correct short circuit conditions. 3. Increase Accel/Decel time.

Table 9-2 Fault Codes, Fault Description, and Corrective Action Continued

Keypad Text	Protective Function	Description / Possible Cause	Corrective Action
Output Phase Open	Output Phase Open	The inverter disables its output when one or more output phase (U, V, W), is open. The inverter monitors output current to detect an output phase loss. **Possible cause:** 1. Faulty output contactor (if used). 2. Faulty output wiring.	1. Check output contactor operation. 2. Check output wiring.
BX	BX Protection (Instant Cut Off)	Used for to immediately disable the inverter output and thus cause a coast-to-stop. The inverter instantly disables its output when the BX terminal is turned ON. Inverter returns to normal operation when the BX terminal is turned OFF.	1. Reset the input device that caused the BX protection. 2. Check the wiring to the input wired to the BX terminal.
CAUTION: Unexpected motor start will occur when the BX terminal is turned OFF. The user must ensure that automatic start up of the driven equipment will not cause injury to operating personnel or damage to the driven equipment. In addition, the user is responsible for providing suitable audible or visual alarms or other devices to indicate that this function is enabled and the drive may start at any moment. Failure to observe this precaution could result in severe bodily injury or loss of life.			
HW-Diag	Inverter H/W Fault	A fault signal trips when one of the following occurs: Wdog, (Watch dog) error. EEP error, input phase open, NTC open, or ADC offset. **Possible cause:** 1. Wdog error, (CPU fault). 2. EEP error, (Memory fault). 3. ADC Offset, (Current feedback circuit fault).	Replace Drive.
COM Error CPU Error	Communi-cation Error	Fault trips when communication loss occurs between the keypad and the main control board. **Possible cause:** 1. Faulty connection between keypad and inverter. 2. Inverter CPU failure.	1. Turn power off, then remove and replace keypad to assure proper connection. 2. Replace drive.
Inv. OLT	Inverter Overload	The inverter disables its output when the output current exceeds the rated level, (110% for 1 minute, 130% for 4 seconds). When Inv. OLT occurs, it takes one minute to reset. **Possible cause:** 1. Load exceeds inverter rating. 2. Incorrect inverter capacity selected.	1. Verify driven load is mechanically free. Reduce load. 2. Select correct inverter capacity.

Table 9-2 Fault Codes, Fault Description, and Corrective Action Continued

Keypad Text	Protective Function	Description / Possible Cause	Corrective Action
NTC Open	NTC Open	The inverter disables its output when the motor thermal is open. **Possible cause:** 1. Wiring between drive and motor NTC/PTC is faulty. 2. Failed NTC/PTC.	1. Correct wiring problems between drive and motor NTC/PTC. 2. Replace NTC/PTC.
LOP LOR LOV LOI LOX	Operating method on loss of speed reference	When there is a loss of the reference command, one of three methods of operation may be selected in parameter I/O-92: (1) Continue running at last reference level, (2) Coast stop, (3) Decelerate to a stop at programmed ramp rate. **Possible cause:** 1. LOP - loss of reference from option (DPRAM time out). 2. LOR - loss of reference from remote (Network comm. Loss). 3. LOV - loss of reference from V1 (V1 analog signal loss). 4. LOI - loss of reference from I (I analog signal loss). 5. LOX - loss of reference from Sub-V2, ENC (V2, ENC analog signal loss).	Analyze the reference path and resolve reason for signal loss (e.g. broken wire, PLC programming error).
Fuse Open (over 40hp)	Internal fuse detector	1. Internal fuse opened. 2. Over current ocurred.	1. Check internal fuse detector. 2. Exchange internal fuse.
Input Phase Open	Protection by software with DCL voltage sensor	1. Faulty contact of magnetic switch at input. 2. Faulty input wiring. 3. Internal smoothing capacitor breakdown. 4. Rectifier circuit breakdown.	1. Check magnetic switch at input of inverter. 2. Check input wiring. 3. Visual check smoothing capacitor.
No Motor Trip (FN1 57-59)	Protection by software with current sensor	1. Faulty motor wiring. 2. Too small motor connected.	1. Check motor wiring. 2. Disable No Motor Trip function if not neccessary.

9.4 Troubleshooting

Table 9-3 Troubleshooting

Condition	Check Points
Motor does not rotate	Verify AC input line voltage is within specified range. Check that motor wiring is correct. Verify commanded frequency is not 0. Check parameter BAS-08 is set correctly. Verify brake is released. Verify driven equipment is not jammed. Verify the drive is not faulted.
Motor rotates in wrong direction	Verify which direction is commanded, forward or reverse. Swap any two output motor leads.
Acceleration or Deceleration is erratic or unstable	Verify acceleration/deceleration time is set correctly for the load. Decrease Torque Boost, FN2-68, 69. Perform tuning procedure.
Motor current is excessive	Increase acceleration/deceleration time. Decrease load. Decrease Torque Boost, FN2-68, 69.
Motor speed will not increase	Verify Upper Limit Frequency, BAS-07, is set correctly. Decrease load. Decrease Torque Boost, FN2-68, 69.
Motor speed oscillates	Verify load conditions. Verify speed reference signal is stable.

9.5 How to Check Power Components

9.5.1 Diode Module and IGBT Module Check (7.5HP to 40HP)

Before checking the power components, disconnect the AC input supply and wait until the DC Bus voltage has completely discharged.

Figure 9-1 Power Components Diagram (7.5HP to 40HP)

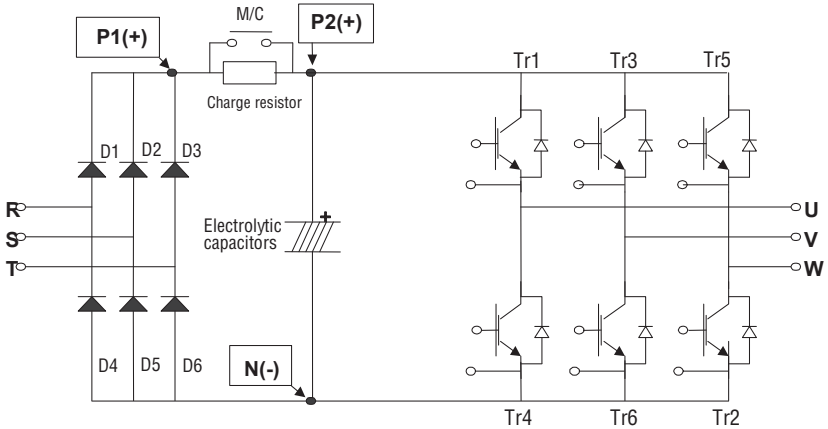

Disconnect the AC input, (R,S,T), and motor output, (U,V,W). Use a voltmeter to verify terminals R,S,T & U,V,W & P, N are de-energized. Use an ohmmeter to measure resistance values in accordance with Table 9-4. The measured value depends on the type of meter used, battery voltage level and drive

rating. Measured values should be similar, device-to-device comparison.

Table 9-4 Power Circuit Resistance Checks

Module		Test polarity		Check value (ohms)	Number	Test polarity		Check value (ohms)
		+	-			+	-	
Diode	D1	R	P1(+)	Low Resistance	D4	R	N(-)	High Resistance or Open
		P1(+)	R	High Resistance or Open		N(-)	R	Low Resistance
	D2	S	P1(+)	Low Resistance	D5	S	N(-)	High Resistance or Open
		P1(+)	S	High Resistance or Open		N(-)	S	Low Resistance
	D3	T	P1(+)	Low Resistance	D6	T	N(-)	High Resistance or Open
		P1(+)	T	High Resistance or Open		N(-)	T	Low Resistance
IGBT	Tr1	U	P2(+)	Low Resistance	Tr4	U	N(-)	High Resistance or Open
		P2(+)	U	High Resistance or Open				Low Resistance
	Tr3	V	P2(+)	Low Resistance	Tr6	V	N(-)	High Resistance or Open
		P2(+)	V	High Resistance or Open		N(-)	V	Low Resistance
	Tr5	W	P2(+)	Low Resistance	Tr2	W	N(-)	High Resistance or Open
		P2(+)	W	High Resistance or Open		N(-)	W	Low Resistance

9.5.2 Diode module and IGBT module check (50HP to 125HP)

Before checking the power components, disconnect the AC input supply and wait until the DC Bus voltage has completely discharged.

Figure 9-2 Power Components Diagram (50HP to 125HP)

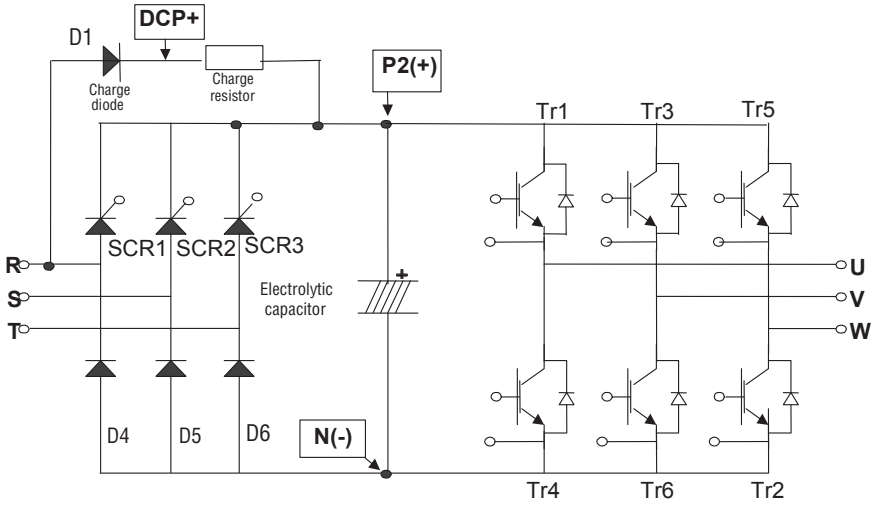

Disconnect the AC input, (R, S, T) and motor output, (U, V, W).
Use a voltmeter to verify terminals R, S, T and U, V, W and P2(+), N(-) are de-energized.
Use an ohmmeter to measure resistance values in accordance with Table 9-4. The measured value depends on the type of meter used, battery voltage level and drive rating. Measured values should be similar, device-to-device comparison.

Table 9-5 Power Circuits Resistance Checks

Module		Test polarity		Check value (ohms)	Number	Test polarity		Check value (ohms)
		+	-			+	-	
Diode	D1	R	DCP+	Low Resistance	D4	R	N(-)	High Resistance or Open
		DCP+	R	High Resistance or Open		N(-)	R	Low Resistance
	D5	S	N(-)	High Resistance or Open	D6	T	N(-)	High Resistance or Open
		N(-)	S	Low Resistance		N(-)	T	Low Resistance
IGBT	Tr1	U	P2(+)	Low Resistance	Tr4	U	N(-)	High Resistance or Open
		P2(+)	U	High Resistance or Open		N(-)	U	Low Resistance
	Tr3	V	P2(+)	Low Resistance	Tr6	V	N(-)	High Resistance or Open
		P2(+)	V	High Resistance or Open		N(-)	V	Low Resistance
	Tr5	W	P2(+)	Low Resistance	Tr2	W	N(-)	High Resistance or Open
		P2(+)	W	High Resistance or Open		N(-)	W	Low Resistance

9.6 Maintenance and Inspections

The VS1PF series drives are industrial electronic products with advanced semiconductor elements. However, temperature, humidity, vibration and adverse atmosphere may affect continued satisfactory performance. Periodic inspection and maintenance should be performed to help avoid problems. Good housekeeping practice to maintain a clean, safe environment will prove worthwhile to ensure satisfactory drive operation.

WARNING: **Be sure to disconnect and lock out the drive input power while performing maintenance. Wait ten (10) minutes for capacitors to discharge to safe voltage levels before removing the cover to the drive. Failure to observe this precaution could result in severe bodily injury or loss of life.**

WARNING: **Be sure to verify that the DC bus has discharged before performing maintenance on the drive. After disconnecting incoming power and waiting ten (10) minutes, remove cover and ensure voltage is not present on the drive power input terminals. Verify that the DC bus voltage has discharged to a level less than 30Vdc by measuring across terminals P2(+) to N(-) with a digital voltmeter set for DC voltage measurements. Failure to observe this precaution could result in severe bodily injury or loss of life.**

Note: The correct output voltage can only be measured by using a TRUE RMS voltmeter. Other voltmeters, including digital voltmeters, are likely to display incorrect values caused by the high frequency PWM output power of the drive.

9.6.1 Periodic Inspection

It is advisable to establish a periodic inspection schedule for the drive and driven equipment. The inspection period timing will depend on operating environment. Inspections should be conducted more frequently in adverse conditions where there might be high vibration, dust, dirt, humidity, or corrosive atmosphere.

- Check for any loose mounting hardware and, if necessary, re-tighten to specified torque value.
- Check that electrical connections are tight and secure.
- Check the cooling fan and heatsink for debris. Remove obstructions as necessary. Visually inspect circuit boards for debris, foreign objects, or contamination. Gently clean or replace as necessary.

Appendix A

Technical Specifications

Table A-1 VS1PF Specifications

Environmental Conditions	Altitude	3300 ft., (1000 m), max without derating. Derate 2% per 1000 ft. (303 meters) above 3300 ft.
	Vibration	0.6G, (5.9m/sec2)
	Ambient Operating Temperature	-10º to 40ºC, (14º to 104ºF) -10º to 50ºC (14º to 122ºF), 80% Load
	Storage Temperature	-20º to 65ºC, (-4× to 149× F)
	Relative Humidity	90%, non-condensing
	Cooling Method	Natural Convection / Forced Air Cooling, (Fan)
	Atmosphere	Important: The drive must not be installed in an area exposed to volatile or corrosive gas, vapors or dust. If the drive will be stored for a time before installation, it must be stored in an area where it will not be exposed to a corrosive atmosphere.

Control	Control Method	V/Hz, Sensorless Vector
	Speed Reference Resolution	Digital command: 0.01Hz Analog signal command: 0.06 Hz, (Max freq., 60 Hz)
	Frequency Accuracy	Digital command: 0.01% of Max output freq. Analog signal command: 0.1% of Max output freq.
	V/Hz Curve	Linear, Squared (Pump and Fan), User custom V/Hz.
	Overload Capacity	110% for 1 min. Normal Duty Ratings; 130% for 4 sec 150% for 1 min. Heavy Duty Ratings; 180% for 4 sec
	Torque Boost	Manual Torque Boost (0 to 15% settable), Auto Torque Boost

Miscellaneous Specifications	Short Circuit Rating	65kA, suitable for use on a circuit capable of delivering not more than 65,000 RMS Symmetrical amperes, 240/480V volts maximum
	Agency Approvals	UL and cUL listed, CE marked

Table A-1 VS1PF Specifications Continued

Operation	Operation Method		Keypad / Terminal / Communication Operation
	Frequency Setting		Analog: 0 to 12V / -12V to 12V / 4 to 20mA or 0 to 20mA / Pulse / Ext-PID Digital: Keypad, Communications
	Input Signal	Start Signal	Forward, Reverse (2-wire); Start, Stop, Direction (3-wire)
		Multi-Step	Up to 18 Speeds can be set including Jog (Use Programmable Digital Input Terminal))
		Multi Step Accel/ Decel Time	0.1 to 6,000 sec, Max 4 types can be set via Multi-Function Terminal. Accel/Decel Pattern: Linear, U-Curve, S-Curve Selectable
		Interlock Stop	Interrupts the Output of Inverter
		Jog	Jog Operation
		Fault Reset	Trip Status is Reset when Protection Function is Active
	Output Signal	Operating Status	Frequency Detection Level, Overload Alarm, Stalling, Over Voltage, Low Voltage, Inverter Overheating/ Running/ Stopping/ At Speed, Inverter By-Pass, Speed Searching
		Fault Output	Contact Output (3A, 3C, 3B): AC 250V 1A, DC 30V 1A
		Analog Output	Choose 2 from Output Frequency, Output Current, Output Voltage, DC Link Voltage (Output Voltage: 0 to 10V)
	Operation Function		DC Braking, Frequency Limit, Frequency Jump, 2nd Function, Slip Compensation, Reverse Rotation Prevention, Auto Restart, Inverter By-Pass, Auto-Tuning, PID Control, Flying Start, Safety Stop, Flux Braking, Low leakage, Pre-PID, Dual-PID, Preheat

Protection Features	Inverter Trip	Over Voltage, Low Voltage, Over Current, Ground Fault, Inverter Overheat, Motor Overheat, Output Phase Open, Overload Protection, External Fault 1, 2, Communication Error, Loss of Speed Command, Hardware Fault, Option Fault, Safety Trip, etc.
	Inverter Alarm	Stall Prevention, Overload Alarm, Thermal Sensor Fault

Display	Operation Information	Output Frequency, Output Current, Output Voltage, Frequency Set Value, Operating Speed, DC Voltage, Integrating Wattmeter, Fan ON time, Run-time, Last Trip Time
	Trip Information	Trips Indication when the Protection Function activates. Max. 5 Faults are saved. Last Trip Time.

Table A-1 VS1PF Specifications Continued

Terminal Strip Input	M1 - M8	Multi-function programmable inputs
	CM	Common terminal
	V1, Analog Voltage Input	-12 - +12 Vdc max.
	I, Analog Current Input	0 – 20 mA, 250 Ohm input impedance
	A0, B0	Pulse Input, 0~100kHz, 12V

Terminal Strip Output	V+, V-, Reference Power Supply	±12 Vdc Output, 100mA max. for 1KOhm to 5Kohm Potentiometer
	S0, S1, Multi-function Analog Output Signals	0 to 12 dc, Vdc, 1 mA max.
	A1-C1 to A4-C4, Multi-function Relay, Normally Open	250 Vac, 1A; 30Vdc, 1A Max
	24, Power Supply	100 mA max output current
	3A (normally open) 3B (normally closed) 3C (common)	Fault Relay Output Terminals: Max. 250 Vac, 1A 30 Vdc, 1A

	Voltage (V)	HP	Efficiency (%)
PF Efficiency	230	7.5	95.7
		10	96.0
		15	96.0
		20	96.5
		25	96.8
		30	97.4
		40	97.6

Table A-1 VS1PF Specifications Continued

	Voltage (V)	HP	Efficiency (%)
PF Efficiency (continued)	460	7.5	96.3
		10	96.3
		15	96.9
		20	97.5
		25	97.5
		30	97.6
		40	97.6
		50	96.5
		60	97.1
		75	96.6
		100	96.0
		125	96.7
		150	97.3
		200	97.5
		250	97.5
		350	98.0
		400	98.0
	600	7.5	95.9 *
		10	96.4 *
		15	96.6 *
		20	96.7 *
		25	96.9 *
		30	96.7 *
		40	96.9 *
		50	96.8 *
		60	97.0 *
		75	97.0 *
		100	97.0 *
		125	97.1 *
		150	97.1 *

*Note: Efficiency data is the estimated value.

B.1 Parameters in Alphabetical Order by Name

Table B-1 Parameters Sorted by Parameter Name

Parameter Name	Param #	Group	Page #	User Setting
2nd Motor Acceleration Time	APP-30 (V2 & V2.5 only)	Application	7-68	
	APP-20 (V1 only)	Application	7-65	
2nd Motor Base Frequency	APP-32 (V2 & V2.5 only	Application	7-68	
	APP-22 (V1 only)	Application	7-65	
2nd Motor Deceleration Time	APP-31 (V2 & V2.5 only)	Application	7-68	
	APP-21 (V1 only)	Application	7-65	
2nd Electronic Thermal Level for Continuous	APP-38 (V2 & V2.5 only)	Application	7-69	
	APP-28 (V1 only)	Application	7-68	
2nd Motor Electronic Thermal Level for 1 Minute	APP-37 (V2 & V2.5 only)	Application	7-69	
	APP-27 (V1 only)	Application	7-67	
2nd Motor Forward Torque Boost	APP-34 (V2 & V2.5 only)	Application	7-69	
	APP-24 (V1 only)	Application	7-66	
2nd Motor Rated Current	APP-39 (V2 & V2.5 only)	Application	7-69	
	APP-29 (V1 only)	Application	7-68	
2nd Motor Reverse Torque Boost	APP-35 (V2 & V2.5 only)	Application	7-69	
	APP-25 (V1 only)	Application	7-66	
2nd Motor Stall Prevention Level	APP-36 (V2 & V2.5 only)	Application	7-69	
	APP-26 (V1 only)	Application	7-67	
2nd Motor V/F Pattern	APP-33 (V2 & V2.5 only)	Application	7-68	
	APP-23 (V1 only)	Application	7-65	

Table B-1 Parameters Sorted by Parameter Name Continued

Parameter Name	Param #	Group	Page #	User Setting
A or B contact	I/O-95	Input/Output	7-58	
Accel/Decel Change Frequency	FN1-72	Function 1	7-25	
Accel/Decel Time Scale	FN1-74	Function 1	7-26	
Accel Time when the Number of Pump Decreases	APP-60 (V2 & V2.5 only)	Application	7-72	
Acceleration Pattern	FN1-02	Function 1	7-11	
Acceleration Time	BAS-10	Basic	7-4	
Acceleration Time 1 (for Preset Speed)	I/O-50	Input/Output	7-51	
Acceleration Time 2	I/O-52	Input/Output	7-51	
Acceleration Time 3	I/O-54	Input/Output	7-51	
Acceleration Time 4	I/O-56	Input/Output	7-51	
Acceleration Time 5	I/O-58	Input/Output	7-51	
Acceleration Time 6	I/O-60	Input/Output	7-51	
Acceleration Time 7	I/O-62	Input/Output	7-51	
AD Parameter	DRV-19	Drive	7-9	
ALL Stop	APP-45 (V2 & V2.5 only)	Application	7-71	
Adjust Gain of Current Output Terminal 1 (CO1)	EXT-41	Extension	7-78	
Adjust Gain of Current Output Terminal 2 (CO2)	EXT-44	Extension	7-78	
Adjust Offset of Current Output Terminal 1 (CO1)	EXT-42	Extension	7-78	
Adjust Offset of Current Output Terminal 2 (CO2)	EXT-45	Extension	7-78	
Analog Speed Band	FN1-85 (V2 & V2.5 only)	Function 1	7-26	
Auto Change Frequency	APP-68 (V2 & V2.5 only)	Application	7-74	
Auto Change Mode Selection	APP-66 (V2 & V2.5 only)	Application	7-73	
Auto Change Time	APP-67 (V2 & V2.5 only)	Application	7-74	
Auto Tuning Selection	FN2-61 (V2 & V2.5 only)	Function 2	7-72	
Aux. Motor Start Selection	APP-41 (V2 & V2.5 only)	Application	7-70	
Baud Rate Selection	I/O-91	Input/Output	7-57	
Carrier Frequency	FN2-48	Function 2	7-36	
Characteristic Selection (Motor Type)	FN1-63	Function 1	7-22	
Comm Up Date	COM-67	Communications	7-79	
Communication Response Delay Time	I/O-94	Input/Output	7-57	
Control Mode Selection	FN2-60	Function 2	7-37	
Criteria for Analog Input Signal Loss	I/O-17	Input/Output	7-47	

Table B-1 Parameters Sorted by Parameter Name Continued

Parameter Name	Param #	Group	Page #	User Setting
Current Input Terminal 2 (CO2) Selection	EXT-43	Extension	7-78	
Current Input User Unit Selection	I/O-87 (V1 only)	Input/Output	7-56	
Current Output Terminal 1 (CO1) Selection	EXT-40	Extension	7-78	
Current Trip Display	DRV-12	Drive	7-7	
D Gain for PID Control	APP-13 (V2 & V2.5 only)	Application	7-62	
	APP-09 (V1 only)	Application	7-61	
D Time for ExtPID	APP-87	Application	7-76	
DC Injection Braking Frequency	FN1-25	Function 1	7-14	
DC Injection Braking on-Delay Time	FN1-24	Function 1	7-14	
DC Injection Braking Time	FN1-26	Function 1	7-15	
DC Injection Braking Value	FN1-27	Function 1	7-15	
DC Link Voltage	DRV-10	Drive	7-7	
Decel time when the number of pump increases	APP-61 (V2 & V2.5 only)	Application	7-72	
Deceleration Pattern	FN1-03	Function 1	7-12	
Deceleration Time	BAS-11	Basic	7-4	
Deceleration Time 1 (for Preset speed)	I/O-51	Input/Output	7-51	
Deceleration Time 2	I/O-53	Input/Output	7-51	
Deceleration Time 3	I/O-55	Input/Output	7-51	
Deceleration Time 4	I/O-57	Input/Output	7-51	
Deceleration Time 5	I/O-59	Input/Output	7-51	
Deceleration Time 6	I/O-61	Input/Output	7-51	
Deceleration Time 7	I/O-63	Input/Output	7-51	
Delay Time Before Auto Relay	FN2-26	Function 2	7-34	
Delay Time Before Operating Aux. Motor	APP-58 (V2 & V2.5 only)	Application	7-72	
Delay Time Before Stoppping Aux. Motor	APP-59 (V2 & V2.5 only)	Application	7-72	
Display Time-Out	DRV-17	Drive	7-8	
Drive Mode	DRV-91	Drive	7-10	
Dwell Frequency	FN2-08	Function 2	7-28	
Dwell Time	FN2-07	Function 2	7-28	
Electronic Thermal Level for 1 Minute	FN1-61	Function 1	7-21	
Electronic Thermal Level for Continuous	FN1-62	Function 1	7-21	
Electronic Thermal Selection	FN1-60	Function 1	7-20	
End Curve for S-Curve Accel/Decel Pattern	FN1-05	Function 1	7-12	

Table B-1 Parameters Sorted by Parameter Name Continued

Parameter Name	Param #	Group	Page #	User Setting
Energy Save	FN1-51	Function 1	7-19	
Energy Save %	FN1-52	Function 1	7-19	
Erase Tips	FN2-06	Function 2	7-28	
Ext PID F Gain	APP-93	Application	7-77	
Ext PID Feedback Signal Selection	APP-83	Application	7-76	
Ext PID Loop Time	APP-97	Application	7-77	
Ext PID Operation Selection	APP-80	Application	7-75	
Ext PID Output Scale	APP-90	Application	7-76	
Ext PID Output Inverse	APP-95	Application	7-77	
Ext PID P Gain Scale	APP-92	Application	7-76	
Ext PID P2 Gain	APP-91	Application	7-76	
Ext PID Parameter	DRV-20	Drive	7-9	
Ext PID Reference Level	APP-82	Application	7-75	
Ext PID Reference Signal Selection	APP-81	Application	7-75	
F-in-L-Out	APP-44 (V2 & V2.5 only)	Application	7-70	
Fan Con Sel (50 to 700 HP)	I/O-84	Input/Output	7-55	
Fan Temperature (50 ~700HP)	I/O-85	Input/Output	7-55	
Fault Output Relay Setting (3A, 3B, 3C)	I/O-80	Input/Output	7-54	
Filtering Time Constant for I Signal Input	I/O-06	Input/Output	7-45	
Filtering Time Constant for Programmable Digital Input Terminals	I/O-29	Input/Output	7-50	
Filtering Time Constant for V1 Signal Input	I/O-01	Input/Output	7-44	
Frequency Corresponding to I Input Maximum Current	I/O-10	Input/Output	7-46	
Frequency Corresponding to I Input Minimum Current	I/O-08	Input/Output	7-45	
Frequency Corresponding to I/O-13 Pulse Input Minimum Frequency	I/O-14	Input/Output	7-46	
Frequency Corresponding to I/O-15 Pulse Input Maximum Frequency	I/O-16	Input/Output	7-47	
Frequency Corresponding to V1 Input Maximum Voltage	I/O-05	Input/Output	7-45	
Frequency Corresponding to V1 Input Minimum Voltage	I/O-03	Input/Output	7-44	
Frequency Detection Bandwidth	I/O-75	Input/Output	7-52	
Frequency Detection Level	I/O-74	Input/Output	7-52	
Frequency Jump Selection	FN2-10	Function 2	7-29	
Frequency Limit Selection	FN1-33	Function 1	7-16	

Table B-1 Parameters Sorted by Parameter Name Continued

Parameter Name	Param #	Group	Page #	User Setting
Frequency Mode 2	DRV-92	Drive	7-10	
Gain During Speed Search	FN2-23 (V2 & V2.5 only)	Function 2	7-32	
Gain for Motor Speed Display	FN2-47	Function 2	7-35	
High Limit Frequency	FN1-35	Function 1	7-16	
High Limit Frequency for Ext PID Control	APP-88	Application	7-76	
High Limit Frequency for PID Control	APP-14 (V2 & V2.5 only)	Application	7-63	
	APP-10 (V1 only)	Application	7-61	
I Gain During Speed Search	FN2-24 (V1 only)	Function 2	7-33	
I Gain for PID Control	APP-12 (V2 & V2.5 only)	Application	7-62	
	APP-08 (V1 only)	Application	7-61	
I Gain for Sensorless Control	FN2-66 (V1 only)	Function 2	7-23	
I Input Maximum Current	I/O-09	Input/Output	7-45	
I Input Minimum Current	I/O-07	Input/Output	7-45	
I Time for Ext PID	APP-86	Application	7-76	
Initialize Parameters	FN2-93	Function 2	7-42	
Input Time	I/O-96	Input/Output	7-58	
Input User Unit Selection	I/O-86	Input/Output	7-55	
Input Voltage Adjustment	FN1-49	Function 1	7-19	
Input/Output Phase Loss Protection	FN1-69	Function 1	7-24	
Integrating Wattmeter	FN1-54	Function 1	7-19	
Inter-Lock Selection	APP-69	Application	7-74	
Interrupt Power Fault	FN2-22 (V2 & V2.5 only)	Function 2	7-31	
Inverter Number	I/O-90	Input/Output	7-57	
Inverter Temperature	FN1-55	Function 1	7-20	
Jog Frequency Setting	I/O-30	Input/Output	7-50	
Jump Frequency 1 High	FN2-12	Function 2	7-29	
Jump Frequency 1 Low	FN2-11	Function 2	7-29	
Jump Frequency 2 High	FN2-14	Function 2	7-29	
Jump Frequency 2 Low	FN2-13	Function 2	7-29	
Jump Frequency 3 High	FN2-16	Function 2	7-30	
Jump Frequency 3 Low	FN2-15	Function 2	7-30	

Table B-1 Parameters Sorted by Parameter Name Continued

Parameter Name	Param #	Group	Page #	User Setting
Keypad Auto/Manual Select	DRV-22	Drive	7-9	
Keypad Removal Reference Mode	DRV-23	Drive	7-9	
Last trip 1	FN2-01	Function 2	7-27	
Last trip 2	FN2-02	Function 2	7-27	
Last trip 3	FN2-03	Function 2	7-27	
Last trip 4	FN2-04	Function 2	7-27	
Last trip 5	FN2-05	Function 2	7-28	
Last Trip Time	FN2-83	Function 2	7-41	
Leakage Inductance of Motor	FN2-63	Function 2	7-38	
Load Inertia	FN2-46	Function 2	7-35	
Low Limit Frequency for Ext PID Control	APP-89	Application	7-76	
Low Limit Frequency for PID Control	APP-15 (V2 & V2.5 only)	Application	7-63	
	APP-11 (V1 only)	Application	7-62	
Manual/Auto Torque Boost Selection	FN2-67	Function 2	7-39	
Maximum Frequency	BAS-07	Basic	7-3	
Meter I Maximum Value (V2 & V2.5 only)	APP-07	Application	7-60	
Meter V Maximum Value (V2 & V2.5 only)	APP-08	Application	7-61	
Meter P Maximum Value (V2 & V2.5 only)	APP-09	Application	7-61	
Minimum Frequency	BAS-06	Basic	7-3	
Motor Efficiency	FN2-45	Function 2	7-34	
Motor Nameplate Base Frequency	BAS-03	Basic	7-2	
Motor Nameplate Current	BAS-04	Basic	7-2	
Motor Nameplate HP	BAS-01	Basic	7-2	
Motor Nameplate RPM	BAS-05	Basic	7-3	
Motor Nameplate Voltage	BAS-02	Basic	7-2	
Motor Overheat Trip Temperature	I/O-98	Input/Output	7-58	
Motor Slip	FN2-42	Function 2	7-34	
Motor Speed	DRV-09	Drive	7-7	
Motor Temperature	FN1-56	Function 1	7-20	
No Load Motor Current (RMS)	FN2-44	Function 2	7-34	
No Motor Selection	FN1-57	Function 1	7-20	
Number of Auto-Restart Tries	FN2-25	Function 2	7-34	
Number of Auxiliary Motor	APP-43 (V2 & V2.5 only)	Application	7-70	
Number of Auxiliary Motor Run Display	APP-40 (V2 & V2.5 only)	Application	7-70	

Table B-1 Parameters Sorted by Parameter Name Continued

Parameter Name	Param #	Group	Page #	User Setting
Number of Motor Poles	FN2-41	Function 2	7-34	
Operating Method at Loss of Frequency Reference	I/O-92	Input/Output	7-57	
Operating Selection at Loss of Frequency Reference	I/O-18	Input/Output	7-47	
Operation Time Display on Auto Change	APP-42 (V2 & V2.5 only)	Application	7-70	
Opt Para 1	COM-61	Communications	7-79	
Opt Para 2	COM-62	Communications	7-79	
Opt Para 3	COM-63	Communications	7-79	
Opt Para 4	COM-64	Communications	7-79	
Opt Para 5	COM-65	Communications	7-79	
Opt Para 6	COM-66	Communications	7-79	
Option Mode	COM-02	Communications	7-79	
Option Version	COM-03	Communications	7-79	
Output Current	DRV-08	Drive	7-6	
Overheat Trip Selection	I/O-97	Input/Output	7-58	
Overload Trip Delay Time	FN1-68	Function 1	7-23	
Overload Trip Level	FN1-67	Function 1	7-23	
Overload Trip Selection	FN1-66	Function 1	7-23	
Overload Warning Level	FN1-64	Function 1	7-22	
Overload Warning Time	FN1-65	Function 1	7-22	
P Gain for PID Control	APP-11 (V2 & V2.5 only)	Application	7-62	
	APP-07 (V1 only)	Application	7-60	
P Gain for Sensorless Control	FN2-65 (V1 only)	Function 2	7-39	
P Gain Scale	APP-18 (V2 & V2.5 only)	Application	7-64	
	APP-14 (V1 only)	Application	7-63	
Parameter Display	FN2-90	Function 2	7-42	
Parameter Write Protection	FN2-94	Function 2	7-43	
Parity/Stop	COM-60	Communications	7-79	
PID Auxiliary Reference Mode Selection	APP-04	Application	7-59	
PID Auxiliary Reference Signal Selection	APP-05	Application	7-60	
PID Bypass Selection	APP-62 (V2 & V2.5 only)	Application	7-72	
PID Feed Forward (F) Gain Selection	APP-03	Application	7-59	
PID Feedback Signal Selection	APP-06	Application	7-60	

Table B-1 Parameters Sorted by Parameter Name Continued

Parameter Name	Param #	Group	Page #	User Setting
PID Operation Selection	APP-02	Application	7-59	
PID Output Inverse	APP-19 (V2 & V2.5 only)	Application	7-64	
	APP-15 (V1 only)	Application	7-63	
PID Output Scale	APP-16 (V2 & V2.5 only)	Application	7-63	
	APP-12 (V1 only)	Application	7-62	
PID P2 Gain	APP-17 (V2 & V2.5 only)	Application	7-63	
	APP-13 (V1 only)	Application	7-63	
PID Parameter	DRV-18	Drive	7-8	
PID U Curve Feedback Selection	APP-20 (V2 & V2.5 only)	Application	7-65	
	APP-17 (V1 only)	Application	7-64	
Pipe Broken	APP-26 (V2 & V2.5 only)	Application	7-66	
Power ON Start Selection	FN2-20	Function 2	7-30	
Power On Time	FN2-84	Function 2	7-41	
Power Set	FN2-87	Function 2	7-42	
Power Source Frequency	FN1-29	Function 1	7-5	
Power-On Display	FN2-80	Function 2	7-41	
Pre-excitation Time	FN2-64	Function 2	7-38	
Pre-Heat	FN1-10 (V2 & V2.5 only	Function 1	7-3	
Pre-Heat Duty Cycle	FN1-12 (V2 & V2.5 only	Function 1	7-3	
Pre-Heat Value	FN1-11 (V2 & V2.5 only	Function 1	7-3	
PrePID Exit Level	APP-24 (V2 & V2.5 only)	Application	7-66	
	APP-75 (V1 only)	Application	7-75	
PrePID Reference Frequency	APP-23 (V2 & V2.5 only)	Application	7-65	
	APP-74 (V1 only)	Application	7-75	

Table B-1 Parameters Sorted by Parameter Name Continued

Parameter Name	Param #	Group	Page #	User Setting
PrePID Stop Delay	APP-25 (V2 & V2.5 only)	Application	7-66	
	APP-76 (V1 only)	Application	7-75	
Preset Speed 1	DRV-05	Drive	7-6	
Preset Frequency 10	I/O-37	Input/Output	7-50	
Preset Frequency 11	I/O-38	Input/Output	7-50	
Preset Frequency 12	I/O-39	Input/Output	7-50	
Preset Frequency 13	I/O-40	Input/Output	7-50	
Preset Frequency 14	I/O-41	Input/Output	7-50	
Preset Frequency 15	I/O-42	Input/Output	7-50	
Preset Speed 2	DRV-06	Drive	7-6	
Preset Speed 3	DRV-07	Drive	7-6	
Preset Frequency 4	I/O-31	Input/Output	7-50	
Preset Frequency 5	I/O-32	Input/Output	7-50	
Preset Frequency 6	I/O-33	Input/Output	7-50	
Preset Frequency 7	I/O-34	Input/Output	7-50	
Preset Frequency 8	I/O-35	Input/Output	7-50	
Preset Frequency 9	I/O-36	Input/Output	7-50	
Pressure Difference for Aux Motor Start	APP-71 (V2 & V2.5 only)	Application	7-74	
Pressure Difference for Aux Motor Stop	APP-72 (V2 & V2.5 only)	Application	7-74	
Programmable Digital Input Terminal ‘M1’ Definition	I/O-20	Input/Output	7-48	
Programmable Digital Input Terminal ‘M2’ Definition	I/O-21	Input/Output	7-48	
Programmable Digital Input Terminal ‘M3’ Definition	I/O-22	Input/Output	7-48	
Programmable Digital Input Terminal ‘M4’ Definition	I/O-23	Input/Output	7-48	
Programmable Digital Input Terminal ‘M5’ Definition	I/O-24	Input/Output	7-48	
Programmable Digital Input Terminal ‘M6’ Definitions	I/O-25	Input/Output	7-48	
Programmable Digital Input Terminal ‘M7’ Definitions	I/O-26	Input/Output	7-48	
Programmable Digital Input Terminal ‘M8’ Definition	I/O-27	Input/Output	7-48	
Programmable Digital Output Terminal (Aux Terminal)	I/O-76	Input/Output	7-52	
Programmable Digital Output Terminal Define	I/O-77	Input/Output	7-52	

Table B-1 Parameters Sorted by Parameter Name Continued

Parameter Name	Param #	Group	Page #	User Setting
Programmable Digital Output Terminal Define	I/O-78	Input/Output	7-52	
Programmable Digital Output Terminal Define	I/O-79	Input/Output	7-52	
P Gain During Speed Search	FN2-22 (V1 only)	Function 2	7-31	
P Gain for ExtPID	APP-85	Application	7-76	
Pulse Input Filter	I/O-12	Input/Output	7-46	
Pulse Input Maximum Frequency	I/O-15	Input/Output	7-47	
Pulse Input Method	I/O-11	Input/Output	7-46	
Pulse Input Minimum Frequency	I/O-13	Input/Output	7-46	
Pulse Input User Unit Selection	I/O-88 (V1 only)	Input/Output	7-56	
PWM Type Selection	FN2-49	Function 2	7-37	
Read Parameter	FN2-91	Function 2	7-42	
Reference Frequency for Accel and Decel	FN1-73	Function 1	7-25	
Reference/Feedback Frequency Display	DRV-15	Drive	7-8	
Restart after Fault Reset	FN2-21	Function 2	7-31	
Run Prevention	FN1-01	Function 1	7-1	
Run-Time	FN2-85	Function 2	7-41	
S0 Output Adjustment	I/O-71	Input/Output	7-52	
S0 Output Selection	I/O-70	Input/Output	7-51	
S1 Output Adjustment	I/O-73	Input/Output	7-52	
S1 Output Selection	I/O-72	Input/Output	7-51	
Safety Stop	FN1-28	Function 1	7-15	
Safety STOP Inertia Rate	FN1-90 (V2 & V2.5 only)	Function 1	7-26	
Save Parameter	FN2-95	Function 2	7-43	
Sleep Delay Time	APP-27 (V2 & V2.5 only)	Application	7-67	
	APP-63 (V1 only)	Application	7-73	
Sleep Frequency	APP-28 (V2 & V2.5 only)	Application	7-67	
	APP-64	Application	7-73	
Software Version	FN2-82	Function 2	7-41	
Speed Reference Source	BAS-09	Basic	7-3	
Speed Search Selection	FN2-22 (V1 only)	Function 2	7-32	
Speed Search Type Selection	FN2-24 (V2 & V2.5 only)	Function 2	7-33	
Speed Unit Selection	DRV-16	Drive	7-8	

Table B-1 Parameters Sorted by Parameter Name Continued

Parameter Name	Param #	Group	Page #	User Setting
Stall Prevention Level	FN1-71	Function 1	7-24	
Stall Prevention Mode Selection	FN1-70 (V1 only)	Function 1	7-24	
Start Curve for S-Curve Accel/Decel Pattern	FN1-04	Function 1	7-	
Start Frequency of Aux. Motor 1	APP-47 (V2 & V2.5 only)	Application	7-71	
Start Frequency of Aux. Motor 2	APP-48 (V2 & V2.5 only)	Application	7-71	
Start Frequency of Aux. Motor 3	APP-49 (V2 & V2.5 only)	Application	7-71	
Start Frequency of Aux. Motor 4	APP-50 (V2 & V2.5 only)	Application	7-71	
Start Mode	FN1-20	Function 1	7-13	
Start/Stop Hz	BAS-20 (V2.5 only)	Basic	7-5	
Start/Stop Source	BAS-08	Basic	7-3	
Starting DC Injection Braking Time	FN1-21	Function 1	7-14	
Starting DC Injection Braking Value	FN1-22	Function 1	7-14	
Starting Frequency	FN1-32	Function 1	7-15	
Stator Resistance of Motor	FN2-62	Function 2	7-38	
Stop Frequency Band	BAS-21 (V2.5 only)	Basic	7-5	
Stop Frequency of Aux. Motor 1	APP-51 (V2 & V2.5 only)	Application	7-72	
Stop Frequency of Aux. Motor 2	APP-52 (V2 & V2.5 only)	Application	7-72	
Stop Frequency of Aux. Motor 3	APP-53 (V2 & V2.5 only)	Application	7-72	
Stop Frequency of Aux. Motor 4	APP-54 (V2 & V2.5 only)	Application	7-72	
Stop Mode	BAS-12	Basic	7-4	
Terminal Input Status	I/O-28	Input/Output	7-49	
Terminal Output Status	I/O-81	Input/Output	7-54	
Torque Boost in Forward Direction	FN2-68	Function 2	7-40	
Torque Boost in Reverse Direction	FN2-69	Function 2	7-41	
Trip Current Level	FN1-58	Function 1	7-20	
Trip Time Setting	FN1-59	Function 1	7-20	
Type of SUB Board	COM-01	Communications	7-79	
Type of SUB Board	EXT-01	Extension	7-78	

Table B-1 Parameters Sorted by Parameter Name Continued

Parameter Name	Param #	Group	Page #	User Setting
Unit Maximum Value	I/O-87 (V2 & V2.5 only)	Input/Output	7-56	
Up Down Frequency Save	FN1-81 (V2 & V2.5 only)	Function 1	7-26	
Up Down Frequency Save Mode	FN1-80 (V2 & V2.5 only)	Function 1	7-26	
User V/F - Frequency 1	FN1-41	Function 1	7-17	
User V/F - Frequency 2	FN1-43	Function 1	7-18	
User V/F - Frequency 3	FN1-45	Function 1	7-18	
User V/F - Frequency 4	FN1-47	Function 1	7-18	
User V/F - Voltage 1	FN1-42	Function 1	7-17	
User V/F - Voltage 2	FN1-44	Function 1	7-18	
User V/F - Voltage 3	FN1-46	Function 1	7-18	
User V/F - Voltage 4	FN1-48	Function 1	7-19	
V1 Input Maximum Voltage	I/O-04	Input/Output	7-44	
V1 Input Minimum Voltage	I/O-02	Input/Output	7-44	
Voltage Input User Unit Selection	I/O-86	Input/Output	7-55	
Volts/Hz Pattern	FN1-40	Function 1	7-16	
Waiting Time after Fault Output Relay Off	I/O-83	Input/Output	7-55	
Waiting Time after Fault Output Relay On	I/O-82	Input/Output	7-54	
Waiting Time after Loss of Freqquency Reference	I/O-93	Input/Output	7-57	
Waiting Time after Loss of Frequency Reference	I/O-19	Input/Output	7-48	
Wake-Up Level	APP-29 (V2 & V2.5 only)	Application	7-68	
	APP-65 (V1 only)	Application	7-73	
Write Parameter	FN2-92	Function 2	7-42	

B.2 Parameters Sorted by Group and Parameter Number

RO = Read Only parameter: cannot be changed, used for display
RW = Read/Write parameter: can be changed only when drive is not running
Tunable = Parameter can be immediately changed while drive is running

Table B-2 Parameters Sorted by Group and Parameter Number

Group	Number	Parameter Name	Page #	Tunable/ RW/RO	Comm Addr	User Setting
Application	APP-01	Application Mode Selection	7-59	RW	9801	
Application	APP-02	PID Operation Selection	7-59	RW	9802	
Application	APP-03	PID F Gain Selection	7-59	Tunable	9803	
Application	APP-04	PID Auxiliary Reference Mode Selection	7-59	RW	9804	
Application	APP-05	PID Auxiliary Reference Signal Selection	7-60	RW	9805	
Application	APP-06	PID Feedback Signal Selection	7-60	RW	9806	
Application	APP-07	Meter I Maximum Value (V2 & V2.5 only)	7-60	Tunable	9807	
		P Gain for PID Control (V1 only)	7-60	Tunable	980B	
Application	APP-08	Meter V Maximum Value (V2 & V2.5 only)	7-61	Tunable	9808	
		I Gain for PID Control (V1 only)		Tunable	980C	
Application	APP-09	Meter P Maximum Value (V2 & V2.5 only)	7-61	Tunable	9809	
		D Gain for PID Control (V1 only)	7-61	Tunable	980D	
Application	APP-10	High Limit Frequency for PID Control (V1 only)	7-61	Tunable	980E	
Application	APP-11	P Gain for PID Control (V2 & V2.5 only)	7-62	Tunable	980B	
		Low Limit Frequency for PID Control (V1 only)	7-62	Tunable	980F	
Application	APP-12	I Gain for PID Control (V2 & V2.5 only)	7-62	Tunable	980C	
		PID Output Scale (V1 only)	7-62	RW	9810	
Application	APP-13	D Gain for PID Control (V2 & V2.5 only)	7-62	Tunable	980D	
		PID P2 Gain (V1 only)	7-63	RW	9811	
Application	APP-14	High Limit Frequency for PID Control (V2 & V2.5 only)	7-63	Tunable	980E	
		P Gain Scale (V1 only)	7-63	RW	9812	
Application	APP-15	Low Limit Frequency for PID Control (V2 & V2.5 only)	7-63	Tunable	980F	
		PID Output Inverse (V1 only)	7-63	RW	9813	
Application	APP-16 (V2 & V2.5 only)	PID Output Scale	7-63	RW	9810	

Table B-2 Parameters Sorted by Group and Parameter Continued

Group	Number	Parameter Name	Page #	Tunable/ RW/RO	Comm Addr	User Setting
Application	APP-17	PID P2 Gain (V2 & V2.5 only)	7-63	RW	9811	
		PID U Curve Feedback Selection (V1 only)	7-64	RW	9814	
Application	APP-18 (V2 & V2.5 only)	P Gain Scale	7-64	RW	9812	
Application	APP-19 (V2 & V2.5 only)	PID Output Inverse	7-64	RW	9813	
Application	APP-20	PID U Curve Feedback Selection (V2 & V2.5 only)	7-65	RW	9814	
		2nd Motor Acceleration Time (V1 only)	7-65	Tunable	981E	
Application	APP-21 (V1 only)	2nd Motor Deceleration Time	7-65	Tunable	9815	
Application	APP-22 (V1 only)	2nd Motor Base Frequency	7-65	RW	9820	
Application	APP-23	PrePID Reference Frequency (V2 & V2.5 only)	7-65	Tunable	9817	
		2nd Motor V/F Pattern (V1 only)	7-66	RW	9821	
Application	APP-24	PrePID Exit Level (V2 & V2.5 only)	7-66	Tunable	9818	
		2nd Motor Forward Torque Boost (V1 only)	7-66	RW	9822	
Application	APP-25	PrePID Stop Delay (V2 & V2.5 only)	7-66	Tunable	9819	
		2nd Motor Reverse Torque Boost (V1 only)	7-66	RW	9823	
Application	APP-26	Pipe Broken (V2 & V2.5 only)	7-66	RW	981A	
		2nd Motor Stall Prevention Level (V1 only)	7-67	RW	9824	
Application	APP-27	Sleep Delay Time (V2 & V2.5 only)	7-67	Tunable	981B	
		2nd Motor Electronic Thermal Level for 1 Minute (V1 only)	7-67	Tunable	9825	
Application	APP-28	Sleep Frequency (V2 & V2.5 only)	7-67	Tunable	981C	
		2nd Motor Electronic Thermal Level for Continuous (V1 only)	7-68	Tunable	9826	
Application	APP-29	Wake-Up Level (V2 & V2.5 only)	7-68	Tunable	981D	
		2nd Motor Rated Current (V1 only)	7-68	RW	9827	
Application	APP-30 (V2 & V2.5 only)	2nd Motor Acceleration Time	7-68	Tunable	981E	
Application	APP-31 (V2 & V2.5 only)	2nd Motor Deceleration Time	7-68	Tunable	9815	
Application	APP-32 (V2 & V2.5 only)	2nd Motor Base Frequency	7-68	RW	9820	
Application	APP-33 (V2 & V2.5 only)	2nd Motor V/F Pattern	7-68	RW	9821	
Application	APP-34 (V2 & V2.5 only)	2nd Motor Forward Torque Boost	7-69	RW	9822	

Table B-2 Parameters Sorted by Group and Parameter Continued

Group	Number	Parameter Name	Page #	Tunable/ RW/RO	Comm Addr	User Setting
Application	APP-35 (V2 & V2.5 only)	2nd Motor Reverse Torque Boost	7-69	RW	9823	
Application	APP-36 (V2 & V2.5 only)	2nd Motor Stall Prevention Level	7-69	RW	9824	
Application	APP-37 (V2 & V2.5 only)	2nd Motor Electronic Thermal Level for 1 Minute	7-69	Tunable	9825	
Application	APP-38 (V2 & V2.5 only)	2nd Motor Electronic Thermal Level for Continuous	7-69	Tunable	9826	
Application	APP-39 (V2 & V2.5 only)	2nd Motor Rated Current	7-69	RW	9827	
Application	APP-40 (V2 & V2.5 only)	Number of Auxiliary Motor Run Display	7-70	RO	9828	
Application	APP-41 (V2 & V2.5 only)	Aux. Motor Start Selection	7-70	Tunable	9829	
Application	APP-42 (V2 & V2.5 only)	Operation Time Display on Auto Change	7-70	RO	982A	
Application	APP-43 (V2 & V2.5 only)	Number of Aux Motor	7-70	Tunable	982B	
Application	APP-44 (V2 & V2.5 only)	F-in L-out	7-70	RW	982C	
Application	APP-45 (V2 & V2.5 only)	All Stop	7-71	RW	982D	
Application	APP-47 (V2 & V2.5 only)	Start Frequency of Aux. Motor 1	7-71	Tunable	982F	
Application	APP-48 (V2 & V2.5 only)	Start Frequency of Aux. Motor 2	7-71	Tunable	9830	
Application	APP-49 (V2 & V2.5 only)	Start Frequency of Aux. Motor 3	7-71	Tunable	9831	
Application	APP-50 (V2 & V2.5 only)	Start Frequency of Aux. Motor 4	7-71	Tunable	9832	
Application	APP-51 (V2 & V2.5 only)	Stop Frequency of Aux. Motor 1	7-72	Tunable	9833	
Application	APP-52 (V2 & V2.5 only)	Stop Frequency of Aux. Motor 2	7-72	Tunable	9834	
Application	APP-53 (V2 & V2.5 only)	Stop Frequency of Aux. Motor 3	7-72	Tunable	9835	
Application	APP-54 (V2 & V2.5 only)	Stop Frequency of Aux. Motor 4	7-72	Tunable	9836	
Application	APP-58 (V2 & V2.5 only)	Delay Time before Operating Aux Motor	7-72	Tunable	983A	
Application	APP-59 (V2 & V2.5 only)	Delay Time before Stopping Aux Motor	7-72	Tunable	983B	
Application	APP-60 (V2 & V2.5 only)	Accel Time when the Number of Pump Decreases	7-72	Tunable	983C	

Table B-2 Parameters Sorted by Group and Parameter Continued

Group	Number	Parameter Name	Page #	Tunable/ RW/RO	Comm Addr	User Setting
Application	APP-61 (V2 & V2.5 only)	Decel Time when the Number of Pump Increases	7-72	Tunable	983D	
Application	APP-62 (V2 & V2.5 only)	PID Bypass Selection	7-72	RW	983E	
Application	APP-63 (V1 only)	Sleep Delay Time	7-73	Tunable	981B	
Application	APP-64 (V1 only)	Sleep Frequency	7-73	Tunable	981C	
Application	APP-65 (V1 only)	Wake-Up Level	7-73	Tunable	981D	
Application	APP-66 (V2 & V2.5 only)	Auto Change Mode Selection	7-73	Tunable	9842	
Application	APP-67 (V2 & V2.5 only)	Auto Change Time	7-74	Tunable	9843	
Application	APP-68 (V2 & V2.5 only)	Auto Change Freq	7-74	Tunable	9844	
Application	APP-69 (V2 & V2.5 only)	Inter-Lock Selection	7-74	Tunable	9845	
Application	APP-71 (V2 & V2.5 only)	Pressure Difference for Aux Motor Start	7-74	Tunable	9847	
Application	APP-72 (V2 & V2.5 only)	Pressure Difference for Aux Motor Stop	7-74	Tunable	9848	
Application	APP-74 (V1 only)	PrePID Reference Frequency	7-75	Tunable	9817	
Application	APP-75 (V1 only)	PrePID Exit Level	7-75	Tunable	9818	
Application	APP-76 (V1 only	PrePID Stop Delay	7-75	Tunable	9819	
Application	APP-80	Ext PID Operation Selection	7-75	RW	9850	
Application	APP-81	Ext PID Reference Signal Selection	7-75	RW	9851	
Application	APP-82	Ext PID Reference Level	7-75	RW	9852	
Application	APP-83	Ext PID Feedback Signal Selection	7-76	RW	9853	
Application	APP-85	P Gain for ExtPID	7-76	RW	9855	
Application	APP-86	I Time for ExtPID	7-76	RW	9856	
Application	APP-87	D Time for ExtPID	7-76	RW	9857	
Application	APP-88	High Limit Frequency for ExtPID Control	7-76	RW	9858	
Application	APP-89	Low Limit Frequency for Ext PID Control	7-76	RW	9859	
Application	APP-90	Ext PID Output Scale	7-76	RW	985A	
Application	APP-91	Ext PID P2 Gain	7-76	RW	985B	
Application	APP-92	Ext PID P Gain Scale	7-76	RW	985C	
Application	APP-93	Ext PID F Gain	7-77	Tunable	985D	
Application	APP-95	Ext PID Output Inverse	7-77	RW	985F	
Application	APP-97	Ext PID Loop Time	7-77	RW	9861	
Basic	BAS-01	Motor Nameplate HP	7-2	RW	9101	

Table B-2 Parameters Sorted by Group and Parameter Continued

Group	Number	Parameter Name	Page #	Tunable/ RW/RO	Comm Addr	User Setting
Basic	BAS-02	Motor Nameplate Voltage	7-2	RW	9102	
Basic	BAS-03	Motor Nameplate Base Frequency	7-2	RW	9103	
Basic	BAS-04	Motor Nameplate Current	7-2	RW	9104	
Basic	BAS-05	Motor Nameplate RPM	7-3	RW	9105	
Basic	BAS-06	Minimum Frequency	7-3	Tunable	9106	
Basic	BAS-07	Maximum Frequency	7-3	Tunable	9107	
Basic	BAS-08	Start/Stop Source	7-3	RW	9108	
Basic	BAS-09	Speed Reference Source	7-3	RW	9109	
Basic	BAS-10	Acceleration Time	7-4	Tunable	910A	
Basic	BAS-11	Deceleration Time	7-4	Tunable	910B	
Basic	BAS-12	Stop Mode	7-4	RW	910C	
Basic	BAS-20 (V2.5 only)	Start/Stop Hz	7-5			
Basic	BAS-21 (V2.5 only)	Stop Frequency Band	7-5			
Communi-cations	COM-01	Type of SUB Board	7-79	RO	9701	
Communi-cations	COM-02	Option Mode	7-79	RW	9702	
Communi-cations	COM-03	Option Version	7-79	RO	9703	
Communi-cations	COM-60	Parity/Stop	7-79	Tunable	9760	
Communi-cations	COM-61	Opt Para-1	7-79	Tunable	973D	
Communi-cations	COM-62	Opt Para-2	7-79	Tunable	973E	
Communi-cations	COM-63	Opt Para-3	7-79	Tunable	973F	
Communi-cations	COM-64	Opt Para-4	7-79	Tunable	9740	
Communi-cations	COM-65	Opt Para-5	7-79	Tunable	9741	
Communi-cations	COM-66	Opt Para-6	7-79	Tunable	9742	
Communi-cations	COM-67	Comm Up Date	7-79	RW	9743	
Drive	DRV-05	Preset Speed 1	7-6	Tunable	9205	
Drive	DRV-06	Preset Speed 2	7-6	Tunable	9206	
Drive	DRV-07	Preset Speed 3	7-6	Tunable	9207	
Drive	DRV-08	Output Current	7-6	RO	9208	
Drive	DRV-09	Motor Speed	7-7	RO	9209	

Table B-2 Parameters Sorted by Group and Parameter Continued

Group	Number	Parameter Name	Page #	Tunable/ RW/RO	Comm Addr	User Setting
Drive	DRV-10	DC Link Voltage	7-7	RO	920A	
Drive	DRV-12	Current Trip Display	7-7	RO	920C	
Drive	DRV-15	Reference/Feedback Frequency Display	7-8	RO	920F	
Drive	DRV-16	Speed Unit Selection	7-8	Tunable	9210	
Drive	DRV-17	Display Time-Out	7-8	Tunable	9211	
Drive	DRV-18	PID Parameter	7-8	RO	9212	
Drive	DRV-19	AD Parameter	7-9	RO	9213	
Drive	DRV-20	Ext PID Parameter	7-9	RO	9214	
Drive	DRV-22	Keypad Auto/Manual Select	7-9	RW	9216	
Drive	DRV-23	Keypad Removal Reference Mode	7-9	Tunable	9217	
Drive	DRV-91	Drive Mode	7-10	RW	925B	
Drive	DRV-92	Frequency Mode 2	7-10	RW	925C	
Extension	EXT-01	Type of SUB Boards	7-78	RO	9601	
Extension	EXT-40	Current Output Terminal 1 (CO1) Selection	7-78	Tunable	9628	
Extension	EXT-41	Adjust Gain of Current Output Terminal 1 (CO1)	7-78	Tunable	9629	
Extension	EXT-42	Adjust Offset of Current Output Terminal 1(CO1)	7-78	Tunable	962A	
Extension	EXT-43	Current Input Terminal 2 (CO2) Selection	7-78	Tunable	962B	
Extension	EXT-44	Adjust Gain of Current Output Terminal 2 (CO2)	7-78	Tunable	962C	
Extension	EXT-45	Adjust Offset of Current Output Terminal 2(CO2)	7-78	Tunable	962D	
Function 1	FN1-01	Run Prevention	7-11	RW	9301	
Function 1	FN1-02	Acceleration Pattern	7-11	RW	9302	
Function 1	FN1-03	Deceleration Pattern	7-12	RW	9303	
Function 1	FN1-04	Start Curve for S-Curve Accel/ Decel Pattern	7-12	RW	9304	
Function 1	FN1-05	End Curve for S-Curve Accel/ Decel Pattern	7-12	RW	9305	
Function 1	FN1-10 (V1 & V2.5 only)	Pre-Heat	7-13	RW	930A	
Function 1	FN1-11 (V1 & V2.5 only)	Pre-Heat Value	7-13	RW	930B	
Function 1	FN1-12 (V1 & V2.5 only)	Pre-Heat Duty Cycle	7-13	RW	930C	
Function 1	FN1-20	Start Mode	7-13	RW	9314	
Function 1	FN1-21	Starting DC Injection Braking Time	7-14	RW	9315	

Table B-2 Parameters Sorted by Group and Parameter Continued

Group	Number	Parameter Name	Page #	Tunable/ RW/RO	Comm Addr	User Setting
Function 1	FN1-22	Starting DC Injection Braking Value	7-14	RW	9316	
Function 1	FN1-24	DC Injection Braking on-Delay Time	7-14	RW	9318	
Function 1	FN1-25	DC Injection Braking Frequency	7-14	RW	9319	
Function 1	FN1-26	DC Injection Braking Time	7-15	RW	931A	
Function 1	FN1-27	DC Injection Braking Value	7-15	RW	931B	
Function 1	FN1-28	Safety Stop	7-15	RW	931C	
Function 1	FN1-29	Power Source Frequency	7-15	RW	931D	
Function 1	FN1-32	Starting Frequency	7-15	RW	9320	
Function 1	FN1-33	Frequency Limit Selection	7-16	RO	9321	
Function 1	FN1-35	High Limit Frequency	7-16	RO	9323	
Function 1	FN1-40	Volts/Hz Pattern	7-16	RW	9328	
Function 1	FN1-41	User V/F - Frequency 1	7-17	RW	9329	
Function 1	FN1-42	User V/F - Voltage 1	7-17	RW	932A	
Function 1	FN1-43	User V/F - Frequency 2	7-18	RW	932B	
Function 1	FN1-44	User V/F - Voltage 2	7-18	RW	932C	
Function 1	FN1-45	User V/F - Frequency 3	7-18	RW	932D	
Function 1	FN1-46	User V/F - Voltage 3	7-18	RW	932E	
Function 1	FN1-47	User V/F - Frequency 4	7-18	RW	932F	
Function 1	FN1-48	User V/F - Voltage 4	7-19	RW	9330	
Function 1	FN1-49	Input Voltage Adjustment	7-19	RW	9331	
Function 1	FN1-51	Energy Save	7-19	RW	9333	
Function 1	FN1-52	Energy Save %	7-19	Tunable	9334	
Function 1	FN1-54	Integrating Wattmeter	7-19	RO	9335 / 9336	
Function 1	FN1-55	Inverter Temperature	7-20	RO	9337	
Function 1	FN1-56	Motor Temperature	7-20	RO	9338	
Function 1	FN1-57	No Motor Selection	7-20	RW	9339	
Function 1	FN1-58	Trip Current Level	7-20	RW	933A	
Function 1	FN1-59	Trip Time Setting	7-20	RW	933B	
Function 1	FN1-60	Electronic Thermal Selection	7-20	Tunable	933C	
Function 1	FN1-61	Electronic Thermal Level for 1 Minute	7-21	Tunable	933D	
Function 1	FN1-62	Electronic Thermal Level for Continuous	7-21	Tunable	933E	
Function 1	FN1-63	Characteristic Selection (Motor Type)	7-22	Tunable	933F	
Function 1	FN1-64	Overload Warning Level	7-22	Tunable	9340	

Table B-2 Parameters Sorted by Group and Parameter Continued

Group	Number	Parameter Name	Page #	Tunable/ RW/RO	Comm Addr	User Setting
Function 1	FN1-65	Overload Warning Time	7-22	Tunable	9341	
Function 1	FN1-66	Overload Trip Selection	7-23	Tunable	9342	
Function 1	FN1-67	Overload Trip Level	7-23	Tunable	9343	
Function 1	FN1-68	Overload Trip Delay Time	7-23	Tunable	9344	
Function 1	FN1-69	Input/Output Phase Loss Protection	7-24	Tunable	9345	
Function 1	FN1-70 (V1 only)	Stall Prevention Mode Selection	7-24	RW		
Function 1	FN1-71	Stall Prevention Level	7-24	RW	9347	
Function 1	FN1-72	Accel/Decel Change Frequency	7-25	RW	9348	
Function 1	FN1-73	Reference Frequency for Accel and Decel	7-25	RW	9349	
Function 1	FN1-74	Accel/Decel Time Scale	7-26	Tunable	934A	
Function 1	FN1-80 (V2 & V2.5 only)	Up Down Frequency Save Mode	7-26	Tunable	9350	
Function 1	FN1-81 (V2 & V2.5 only)	Up Down Save Frequency	7-26	RO	9351	
Function 1	FN1-85 (V2.5 only)	Analog Speed Band	7-26	RW	9354	
Function 1	FN1-90 (V2 & V2.5 only)	Safety STOP inertia Rate	7-26	Tunable	925A	
Function 2	FN2-01	Last Trip 1	7-27	RO	9401	
Function 2	FN2-02	Last Trip 2	7-27	RO	9402	
Function 2	FN2-03	Last Trip 3	7-27	RO	9403	
Function 2	FN2-04	Last Trip 4	7-27	RO	9404	
Function 2	FN2-05	Last Trip 5	7-28	RO	9405	
Function 2	FN2-06	Erase Tips	7-28	Tunable	9406	
Function 2	FN2-07	Dwell Time	7-28	RW	9407	
Function 2	FN2-08	Dwell Frequency	7-28	RW	9408	
Function 2	FN2-10	Frequency Jump Selection	7-29	RW	940A	
Function 2	FN2-11	Jump Frequency 1 Low	7-29	Tunable	940B	
Function 2	FN2-12	Jump Frequency 1 High	7-29	Tunable	940C	
Function 2	FN2-13	Jump Frequency 2 Low	7-29	Tunable	940D	
Function 2	FN2-14	Jump Frequency 2 High	7-29	Tunable	940E	
Function 2	FN2-15	Jump Frequency 3 Low	7-30	Tunable	940F	
Function 2	FN2-16	Jump Frequency 3 High	7-30	Tunable	9410	
Function 2	FN2-20	Power ON Start Selection	7-30	Tunable	9414	
Function 2	FN2-21	Restart after Fault Reset	7-31	Tunable	9415	
Function 2	FN2-22	Interrupt Power Fault (V2 & V2.5 only)	7-31	RW	9416	
		Speed Search Selection (V1 only)	7-32			

Table B-2 Parameters Sorted by Group and Parameter Continued

Group	Number	Parameter Name	Page #	Tunable/ RW/RO	Comm Addr	User Setting
Function 2	FN2-23	Gain During Speed Search (V2 & V2.5 only)	7-32	Tunable	9417	
		P Gain During Speed Search (V1 only)	7-32	Tunable		
Function 2	FN2-24	Speed Search Type Selection (V2 & V2.5 only)	7-33	Tunable	9418	
		I Gain During Speed Search (V1 only)	7-33	Tunable		
Function 2	FN2-25	Number of Auto-Restart Tries	7-34	Tunable	9419	
Function 2	FN2-26	Delay Time Before Auto Relay	7-34	Tunable	941A	
Function 2	FN2-41	Number of Motor Poles	7-34	RW	9429	
Function 2	FN2-42	Motor Slip	7-34	RW	942A	
Function 2	FN2-44	No Load Motor Current (RMS)	7-34	RW	942C	
Function 2	FN2-45	Motor Efficiency	7-34	RW	942D	
Function 2	FN2-46	Load Inertia	7-35	RW	942E	
Function 2	FN2-47	Gain for Motor Speed Display	7-35	Tunable	942F	
Function 2	FN2-48	Carrier Frequency	7-36	Tunable	9430	
Function 2	FN2-49	PWM Type Selection	7-37	RW	9431	
Function 2	FN2-60	Control Mode Selection	7-37	RW	943C	
Function 2	FN2-61	Auto Tuning Selection	7-38	RW	943D	
Function 2	FN2-62	Stator Resistance of Motor	7-38	RW	943E	
Function 2	FN2-63	Leakage Inductance of Motor	7-38	RW	943F	
Function 2	FN2-64	Pre-excitation Time	7-39	RW	9440	
Function 2	FN2-65 (V1 only)	P Gain for Sensorless Control	7-39			
Function 2	FN2-66 (V1 only)	I Gain for Sensorless Control	7-39			
Function 2	FN2-67	Manual/Auto Torque Boost Selection	7-39	RW	9443	
Function 2	FN2-68	Torque Boost in Forward Direction	7-40	RW	9444	
Function 2	FN2-69	Torque Boost in Reverse Direction	7-41	RW	9445	
Function 2	FN2-80	Power-On Display	7-41	Tunable	9450	
Function 2	FN2-82	Software Version	7-41	RO	9452	
Function 2	FN2-83	Last Trip Time	7-41	RO	9453	
Function 2	FN2-84	Power On Time	7-41	RO	9454	
Function 2	FN2-85	Run-Time	7-41	RO	9455	
Function 2	FN2-87	Power Set	7-42	Tunable	9457	
Function 2	FN2-90	Parameter Display	7-42	Tunable	945A	
Function 2	FN2-91	Read Parameter	7-42	RW	945B	
Function 2	FN2-92	Write Parameter	7-42	RW	945C	
Function 2	FN2-93	Initialize Parameters	7-42	RW	945D	

Table B-2 Parameters Sorted by Group and Parameter Continued

Group	Number	Parameter Name	Page #	Tunable/ RW/RO	Comm Addr	User Setting
Function 2	FN2-94	Parameter Write Protection	7-43	Tunable	945E	
Function 2	FN2-95	Save Parameter	7-43	RW	945F	
Input/Output	I/O-01	Filtering Time Constant for V1 Signal Input	7-44	Tunable	9501	
Input/Output	I/O-02	V1 Input Minimum Voltage	7-44	Tunable	9502	
Input/Output	I/O-03	Frequency Corresponding to V1 Input Minimum Voltage	7-44	Tunable	9503	
Input/Output	I/O-04	V1 Input Maximum Voltage	7-44	Tunable	9504	
Input/Output	I/O-05	Frequency Corresponding to V1 Input Maximum Voltage	7-45	Tunable	9505	
Input/Output	I/O-06	Filtering Time Constant for I Signal Input	7-45	Tunable	9506	
Input/Output	I/O-07	I Input Minimum Current	7-45	Tunable	9507	
Input/Output	I/O-08	Frequency Corresponding to I Input Minimum Current	7-45	Tunable	9508	
Input/Output	I/O-09	I Input Maximum Current	7-45	Tunable	9509	
Input/Output	I/O-10	Frequency Corresponding to I Input Maximum Current	7-46	Tunable	950A	
Input/Output	I/O-11	Pulse Input Method	7-46	Tunable	950B	
Input/Output	I/O-12	Pulse Input Filter	7-46	Tunable	950C	
Input/Output	I/O-13	Pulse Input Minimum Frequency	7-46	Tunable	950D	
Input/Output	I/O-14	Frequency Corresponding to I/O-13 Pulse Input Minimum Frequency	7-46	Tunable	950E	
Input/Output	I/O-15	Pulse Input Maximum Frequency	7-47	Tunable	950F	
Input/Output	I/O-16	Frequency Corresponding to I/O-15 Pulse Input Maximum Frequency	7-47	Tunable	9510	
Input/Output	I/O-17	Criteria for Analog Input Signal Loss	7-47	Tunable	9511	
Input/Output	I/O-18	Operating Selection at Loss of Frequency Reference	7-47	Tunable	9512	
Input/Output	I/O-19	Waiting Time after Loss of Frequency Reference	7-48	Tunable	9513	
Input/Output	I/O-20	Programmable Digital Input Terminal ‘M1’ Definition	7-48	Tunable	9514	
Input/Output	I/O-21	Programmable Digital Input Terminal ‘M2’ Definition	7-48	Tunable	9515	
Input/Output	I/O-22	Programmable Digital Input Terminal ‘M3’ Definition	7-48	Tunable	9516	
Input/Output	I/O-23	Programmable Digital Input Terminal ‘M4’ Definition	7-48	Tunable	9517	
Input/Output	I/O-24	Programmable Digital Input Terminal ‘M5’ Definition	7-48	Tunable	9518	

Table B-2 Parameters Sorted by Group and Parameter Continued

Group	Number	Parameter Name	Page #	Tunable/ RW/RO	Comm Addr	User Setting
Input/Output	I/O-25	Programmable Digital Input Terminal 'M6' Definitions	7-48	Tunable	9519	
Input/Output	I/O-26	Programmable Digital Input Terminal 'M7' Definitions	7-48	Tunable	951A	
Input/Output	I/O-27	Programmable Digital Input Terminal 'M8' Definition	7-48	Tunable	951B	
Input/Output	I/O-28	Terminal Input Status	7-49	RO	951C	
Input/Output	I/O-29	Filtering Time Constant for Programmable Digital Input Terminals	7-50	Tunable	951D	
Input/Output	I/O-30	Jog Frequency Setting	7-50	Tunable	951E	
Input/Output	I/O-31	Preset Frequency 4	7-50	Tunable	951F	
Input/Output	I/O-32	Preset Frequency 5	7-50	Tunable	9520	
Input/Output	I/O-33	Preset Frequency 6	7-50	Tunable	9521	
Input/Output	I/O-34	Preset Frequency 7	7-50	Tunable	9522	
Input/Output	I/O-35	Preset Frequency 8	7-50	Tunable	9523	
Input/Output	I/O-36	Preset Frequency 9	7-50	Tunable	9524	
Input/Output	I/O-37	Preset Frequency 10	7-50	Tunable	9525	
Input/Output	I/O-38	Preset Frequency 11	7-50	Tunable	9526	
Input/Output	I/O-39	Preset Frequency 12	7-50	Tunable	9527	
Input/Output	I/O-40	Preset Frequency 13	7-50	Tunable	9528	
Input/Output	I/O-41	Preset Frequency 14	7-50	Tunable	9529	
Input/Output	I/O-42	Preset Frequency 15	7-50	Tunable	952A	
Input/Output	I/O-50	Acceleration Time 1 (for Preset Speed)	7-51	Tunable	9532	
Input/Output	I/O-51	Deceleration Time 1 (for Preset speed)	7-51	Tunable	9533	
Input/Output	I/O-52	Acceleration Time 2	7-51	Tunable	9534	
Input/Output	I/O-53	Deceleration Time 2	7-51	Tunable	9535	
Input/Output	I/O-54	Acceleration Time 3	7-51	Tunable	9536	
Input/Output	I/O-55	Deceleration Time 3	7-51	Tunable	9537	
Input/Output	I/O-56	Acceleration Time 4	7-51	Tunable	9538	
Input/Output	I/O-57	Deceleration Time 4	7-51	Tunable	9539	
Input/Output	I/O-58	Acceleration Time 5	7-51	Tunable	953A	
Input/Output	I/O-59	Deceleration Time 5	7-51	Tunable	953B	
Input/Output	I/O-60	Acceleration Time 6	7-51	Tunable	953C	
Input/Output	I/O-61	Deceleration Time 6	7-51	Tunable	953D	
Input/Output	I/O-62	Acceleration Time 7	7-51	Tunable	953E	
Input/Output	I/O-63	Deceleration Time 7	7-51	Tunable	953F	

Table B-2 Parameters Sorted by Group and Parameter Continued

Group	Number	Parameter Name	Page #	Tunable/ RW/RO	Comm Addr	User Setting
Input/Output	I/O-70	S0 Output Selection	7-51	Tunable	9546	
Input/Output	I/O-71	S0 Output Adjustment	7-52	Tunable	9547	
Input/Output	I/O-72	S1 Output Selection	7-51	Tunable	9548	
Input/Output	I/O-73	S1 Output Adjustment	7-52	Tunable	9549	
Input/Output	I/O-74	Frequency Detection Level	7-52	Tunable	954A	
Input/Output	I/O-75	Frequency Detection Bandwidth	7-52	Tunable	954B	
Input/Output	I/O-76	Programmable Digital Output Terminal (Aux Terminal)	7-52	Tunable	954C	
Input/Output	I/O-77	Programmable Digital Output Terminal Define	7-52	Tunable	954D	
Input/Output	I/O-78	Programmable Digital Output Terminal Define	7-52	Tunable	954E	
Input/Output	I/O-79	Programmable Digital Output Terminal Define	7-52	Tunable	954F	
Input/Output	I/O-80	Fault Output Relay Setting (3A, 3B, 3C)	7-54	Tunable	9550	
Input/Output	I/O-81	Terminal Output Status	7-54	RO	9551	
Input/Output	I/O-82	Waiting Time after Fault Output Relay On	7-54	RW	9552	
Input/Output	I/O-83	Waiting Time after Fault Output Relay Off	7-55	RW	9553	
Input/Output	I/O-84	Fan Con Sel (50 to 700 HP)	7-55	RW	9554	
Input/Output	I/O-85	Fan Temperature (50 ~700HP)	7-55	Tunable	9555	
Input/Output	I/O-86	Input User Unit Selection	7-55	RW	9556	
Input/Output	I/O-87	Unit Maximum Value (V2 & V2.5 only)	7-56	RW	9557	
		Current Input User Unit Selection (V1 only)	7-56			
Input/Output	I/O-88 (V1 only)	Pulse Input User Unit Selection	7-56			
Input/Output	I/O-90	Inverter Number	7-57	Tunable	955A	
Input/Output	I/O-91	Baud Rate Selection		Tunable	955B	
Input/Output	I/O-92	Operating Method at Loss of Frequency Reference	7-57	Tunable	955C	
Input/Output	I/O-93	Waiting Time after Loss of Frequency Reference	7-57	Tunable	955D	
Input/Output	I/O-94	Communication Response Delay Time	7-57	Tunable	955E	
Input/Output	I/O-95	A or B contact	7-58	RW	955F	
Input/Output	I/O-96	Input Time	7-58	RW	9560	
Input/Output	I/O-97	Overheat Trip Selection	7-58	RW	9561	
Input/Output	I/O-98	Motor Overheat Trip Temperature	7-58	RW	9562	

C.1 CE Declaration of Conformity

Baldor indicates that the products are only components and not ready for immediate or instant use within the meaning of “Safety law of appliance”, “EMC Law” or “Machine directive”. The final mode of operation is defined only after installation into the user’s equipment. It is the responsibility of the user to verify compliance.

The drives that have been evaluated for EMC bear the CE mark.

C.2 EMC - Conformity and CE Marking

The information contained herein is for your guidance only and does not guarantee that the installation will meet the requirements of the council directive 89/336/EEC.
The purpose of the EEC directives is to state a minimum technical requirement common to all the member states within the European Union. In turn, these minimum technical requirements are intended to enhance the levels of safety both directly and indirectly.
Council directive 89/336/EEC relating to Electro Magnetic Compliance (EMC) indicates that it is the responsibility of the system integrator to ensure that the entire system complies with all relative directives at the time of installing into service.
Motors and controls are used as components of a system, per the EMC directive. Hence all components, installation of the components, interconnection between components, and shielding and grounding of the system as a whole determines EMC compliance.
The CE mark does not inform the purchaser which directive the product complies with. It rests upon the manufacturer or his authorized representative to ensure the item in question complies fully with all the relative directives in force at the time of installing into service, in the same way as the system integrator previously mentioned. Remember, it is the instructions of installation and use, coupled with the product, that comply with the directive.

Note that this drive is commercial in design; not for residential environments.

Wiring of Shielded (Screened) Cables

Figure C-1

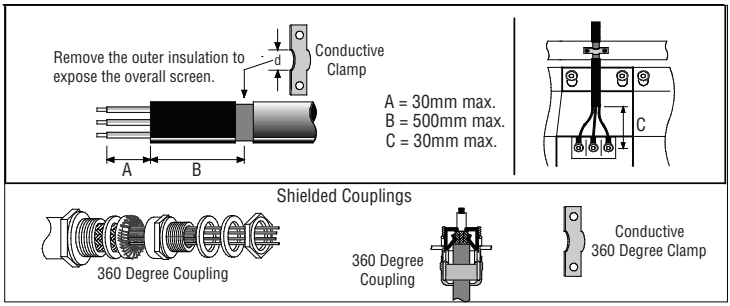

C.3 EMC Installation Options

When installed for Class A or Class B operation, the control is compliant with EN55011 (1991)/ EN55022 (1994) for radiated emissions as described.

C.4 Grounding for Wall Mounting (Class A) also see Chapters 4 and 5

Top cover must be installed.

- A single-star point (earth) is required.
- The protective earth connection (PE) to the motor must be run inside the screened cable or conduit between the motor and control and be connected to the protective earth terminal at the control.
- The internal/external AC supply filter must be permanently earthed.
- The signal/control cables must be screened.

C.5 Grounding for Enclosure Mounting (Class B) also see Chapters 4 and 5

- The unit is installed for Class B operation when mounted inside an enclosure that has 10dB attenuation from 30 to 100MHz (typically the attenuation provided by a metal cabinet with no opening greater than 0.15m), using the recommended AC supply filter and having met all cable requirements.

Note: Radiated magnetic and electric fields inside the cubicle will be high and components installed inside must be sufficiently immune.

- The control, external filter and associated equipment are mounted onto a conducting, metal panel. Do not use enclosures that use insulating mounting panels or undefined mounting structures. Cables between the control and motor must be screened or in conduit and terminated at the control.

C.6 Using CE approved components will not guarantee a CE compliant system!

1. The components used in the drive, installation methods used, materials selected for interconnection of components are important.
2. The installation methods, interconnection materials, shielding, filtering and grounding of the system as a whole will determine CE compliance.
3. The responsibility of CE mark compliance rests entirely with the party who offers the end system for sale (such as an OEM or system integrator).

Baldor products which meet the EMC directive requirements are indicated with a “CE” mark. A signed CE declaration of conformity is provided in this section.

C.7 EMC Wiring Technique

Figure C-2

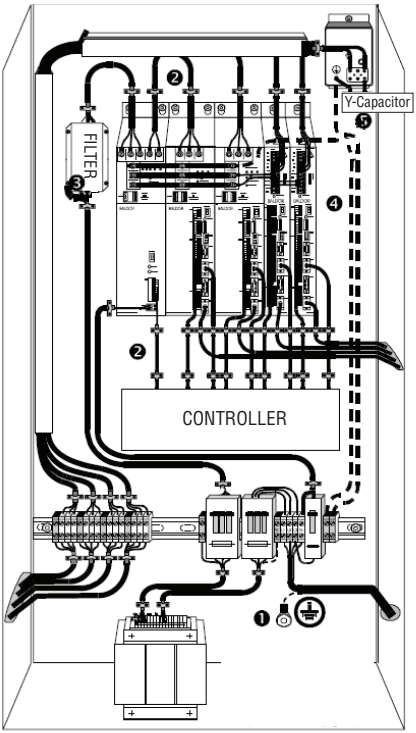

1 CABINET
The drawing shows an electroplated zinc coated enclosure, which is connected to ground.
This enclosure has the following advantages:
- All parts mounted on the back plane are connected to ground.
- All shield (screen) connections are connected to ground.
Within the cabinet there should be a spatial separation between power wiring (motor and AC power cables) and control wiring.

2 SCREEN CONNECTIONS
All connections between components must use shielded cables. The cable shields must be connected to the enclosure. Use conductive clamps to ensure good ground connection. With this technique, a good ground shield can be achieved.

3 EMC - FILTER
The EMI or main filter should be mounted next to the power supply (here BPS). For the connection to and from the main filter, screened cables should be used. The cable screens should be connected to screen clamps on both sides. (Exception: Analog Command Signal).

4 GROUNDING (EARTH)
For safety reasons (VDE0160), all Baldor components must be connected to ground with a separate wire. The diameter of the wire must be at minimum AWG#6 (10mm^2). Ground connections (dashed lines) must be made from the central ground to the regen resistor enclosure and from the central ground to the Shared Power Supply.

5 Y-CAPACITOR
The connection of the regeneration resistor can cause RFI (radio frequency interference) to be very high. To minimize RFI, a Y-capacitor is used. The capacitor should only be connected between the dynamic brake resistor housing and terminal pin R1.

Attention: The drawing shows only the principle of an EMC wiring. The installation shown can be different to any national standard (e.g. VDE).

C.8 EMC Installation Instructions

To ensure electromagnetic compatibility (EMC), the following installation instructions should be completed. These steps help to reduce interference.
Consider the following:

- Grounding of all system elements to a central ground point
- Shielding of all cables and signal wires
- Filtering of power lines

A proper enclosure should have the following characteristics:

A) All metal conducting parts of the enclosure must be electrically connected to the back plane. These connections should be made with a grounding strap from each element to a central grounding point. [1]

B) Keep the power wiring (motor and power cable) and control wiring separated. If these wires must cross, be sure they cross at 90 degrees to minimize noise due to induction.

C) The shield connections of the signal and power cables should be connected to the screen rails or clamps. The screen rails or clamps should be conductive clamps fastened to the cabinet. [2]

D) The cable to the regeneration resistor must be shielded. The shield must be connected to ground at both ends.

E) The location of the AC mains filter has to be situated close to the drive so the AC power wires are as short as possible.

F) Wires inside the enclosure should be placed as close as possible to conducting metal, cabinet walls and plates. It is advised to terminate unused wires to chassis ground. [1]

G) To reduce ground current, use at least a 10mm^2 (6 AWG) solid wire for ground connections.

[1] Grounding in general describes all metal parts which can be connected to a protective conductor, e.g. housing of cabinet, motor housing, etc. to a central ground point. This central ground point is then connected to the main plant (or building) ground.

[2] Or run as twisted pair at minimum.

Example Cable Screens Grounding

Figure C-3

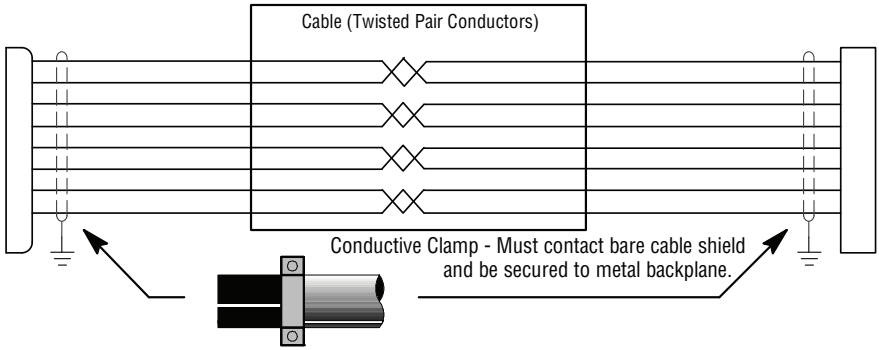

Figure C-4 EC Declaration of Incorporation

BALDOR

Date: 07/11/07 **EC Declaration of Incorporation** Ref: DE00027-000

Manufacturer:	Baldor Electric Company
Address:	5711 R.S Boreham Jr St, Fort Smith, Arkansas, USA
European Representative:	Baldor UK Ltd,
Address:	6 Bristol Distribution Park, Hawkley Drive, Bristol, BS32 0BF, U.K

Hereby declare that the product:

VS1PF AC Inverter Drive being one of:

VS1PF***-** (where ***-** = Product Variant)

is intended to be incorporated into machinery to constitute machinery covered by the EEC directive 98/37/EC, and 89/336/EEC; does therefore not in every respect comply with the provisions of these directives; and that the protection requirements of the following Council Directives and relevant Harmonised European standards must be applied:-

The Electromagnetic Compatibility Directive 89/336/EEC and its amending directives:-

User must follow the guidance given in this directive to meet all necessary protection requirements. Must be installed and operated with reference to the instructions in the product manual MN763. User must follow the guidance given in harmonised standards EN61000-6-2 (Generic Industrial Immunity) and EN61000-6-3 (Generic Light Industrial / residential Emissions) to meet necessary protection requirements of this directive.

Standard:	Title:	Comments:
EN 61800-3	*Adjustable speed electrical power drive systems – Part 3*	Compliant.
EN 61000-4 :2001	*Electromagnetic Compatability :Testing and measurement*	Compliant
EN 61000-2: 1997	*Electromagnetic Compatability: Environmental compatability levels*	Compliant

The Machinery Directive 98/37/EC and its amending directives:-

User must follow the guidance given in this directive to meet all necessary protection requirements. All instructions, warnings & safety information of the product manual MN763 must be adhered to. User must follow the guidance given in harmonised standard EN60204-1 (Safety of Machinery) to meet necessary protection requirements of this directive.

and furthermore declare that it may not be put into service before the machinery in which it will be incorporated is declared to comply with the provisions of directive 98/37/EC & 89/336/EEC as amended.

Signed: .....

Dr. Gerry Boast
Engineering Manager
Baldor UK Ltd

D.1 Remote Keypad Option

Figure D-1 Remote Keypad Option

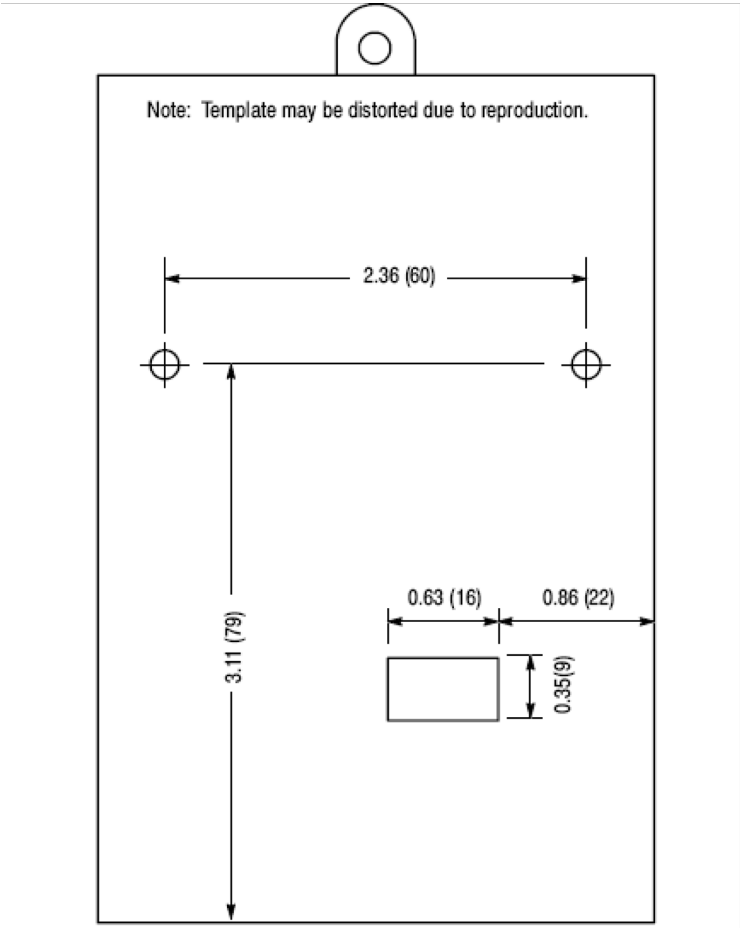

1. Drill two mounting holes in the locations shows using Figure D-1 as a template.
2. Remove the keypad from the VS1PF.
3. Mount the remote keypad.
4. Attach one end of the remote cable in the keypad connector of the control.
5. Attach the other end of the remote cable to the remote keypad.

D.2 Dynamic Brake Unit

Refer to MN763DB for installation instructions for the Dynamic Brake Unit (DBU). VS1PF inverters do not have built-in Dynamic Brake hardware. When required, external DB Unit (Optional) and Brake Resistor(Optional) should be installed.

D.3 Conduit Kit

Table D-1 identifies each conduit kit by part number.

Table D-1 Conduit Kit Models

Conduit Kit	HP	Drive Type	Frames	Hole Size inches (mm)	Conduit Size inches (mm)
VS1PF-NM1C	20 - 25	Standard	C	1x1.38 (35) 2x1.97 (50)	1 (27) 1.5 (41)
VS1PF-NM1D	20 - 25	Built-in DC Reactor	D	2x0.87 (22) 3x2.01 (51)	0.5 (16) 1.5 (41)
VS1PF-NM1E	30 - 40	Standard	E	1x1.97 (50) 2x1.97 (50)	1.5 (41) 1.5 (41)
VS1PF-NM1F	30 - 40	Built-in DC Reactor	F	2x0.87 (22) 3x2.01 (51)	0.5 (16) 1.5 (41)
VS1PF-NM1GH	50 - 75	Standard	G, H	5x0.87 (22) 3x2.01 (51)	0.5 (16) 1.5 (41)
VS1PF-NM1JK	50 - 75	Built-in DC Reactor	J, K	5x0.87 (22) 3x2.01 (51)	0.5 (16) 1.5 (41)
VS1PF-NM1L	100 - 125	Standard	L	5x0.87 (22 3x2.99 (76)	0.5 (16 2.5 (63)
VS1PF-NM1M	100 - 125	Built-in DC Reactor	M	5x0.87 (22 3x2.99 (76)	0.5 (16 2.5 (63)

Figure D-2 Conduit Kit for VS1PF-NM1C 20-25 HP (Standard)

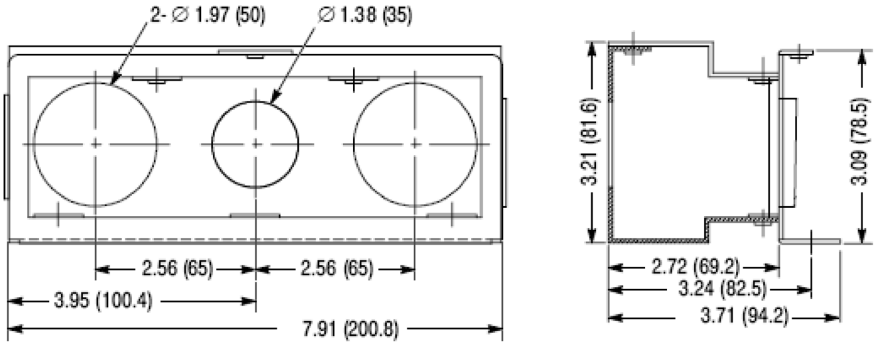

Figure D-3 Conduit Kit for VS1PF-NM1C, NM1E

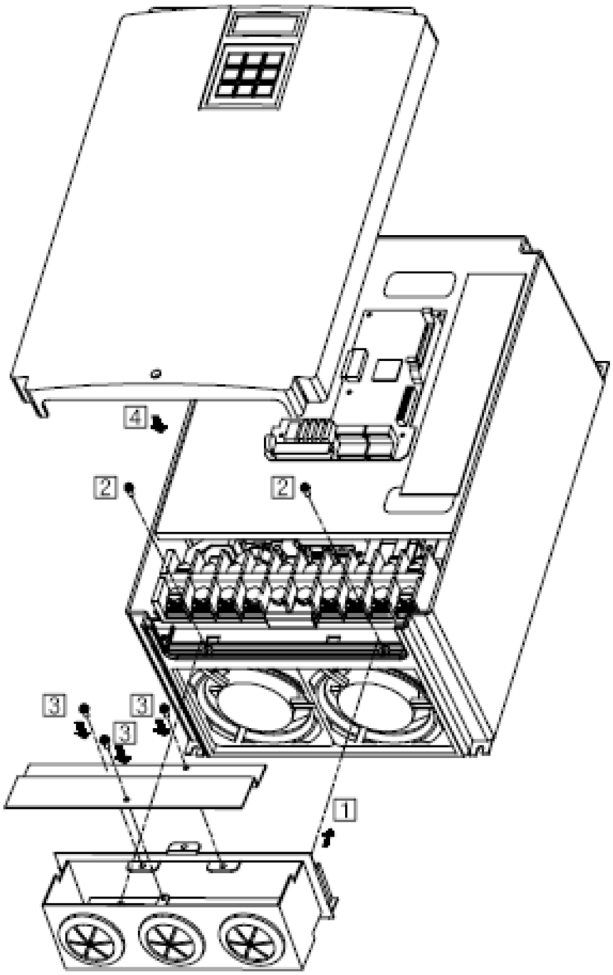

Step 1. Remove the cover from the drive, carefully remove the keypad cable from the drive.
Step 2. Remove two screws [2] that hold the conduit plate in place. Retain the two screws.
Step 3. Slide the conduit plate out of the drive chassis. Discard the plate.
Step 4. Remove three screws [3] and the cover from the front of the conduit kit. Retain screws and cover.
Step 5. Slide the new conduit kit [1] into the slots (above fans) where original conduit plate was removed.
Step 6. Secure using the two screws [2] removed in step 2.
Step 7. Connect conduits and make control and power connections.
Step 8. Install the cover on conduit kit and secure using the three screws [3] removed in step 4.
Step 9. Connect the keypad cable and install drive cover.

Figure D-4 Conduit Kit for VS1PF-NM1D 20-25 HP (Reactor)

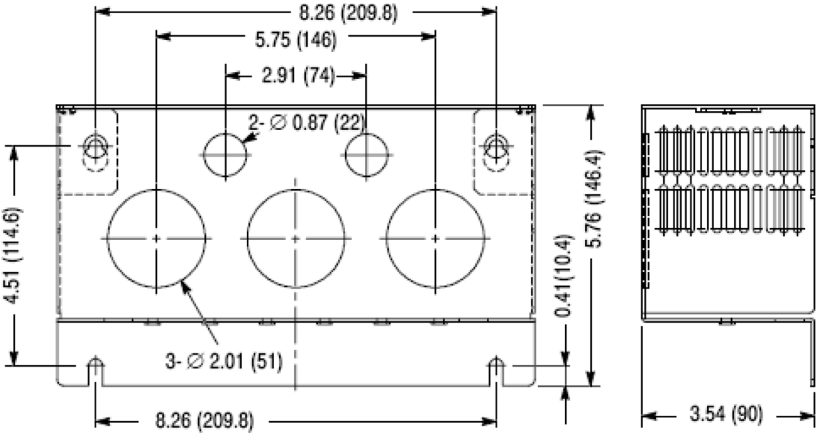

Figure D-5 Conduit Kit for VS1PF-NM1E 30-40 HP (Standard)

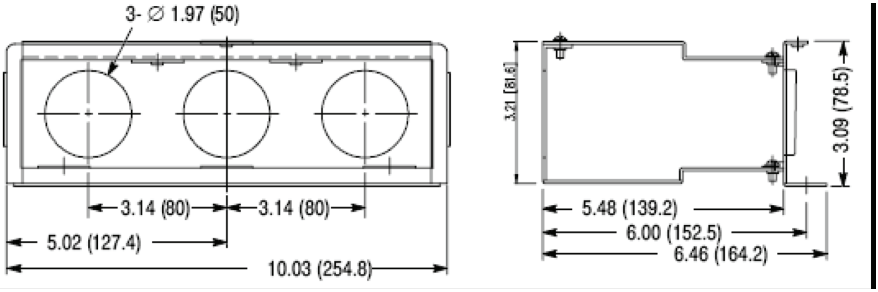

Figure D-6 Conduit Kit for VS1PF-NM1F 40-60 HP (Standard/Reactor)

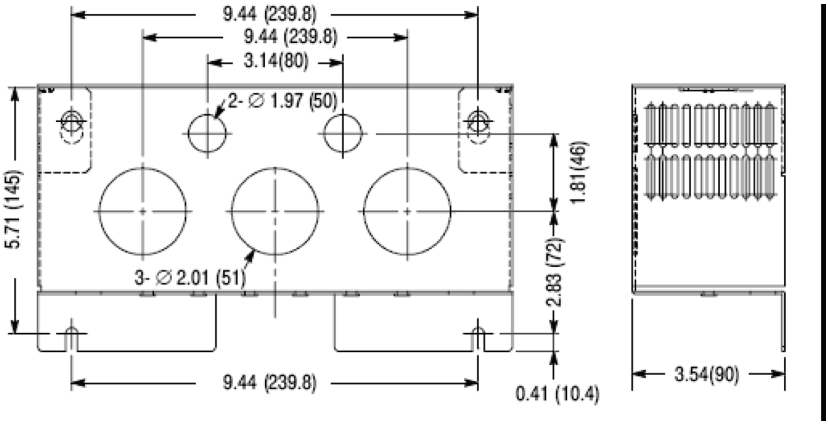

Figure D-7 Conduit Kit for VS1PF-NM1GH & VS1PF-NM1JK 50-75 HP (Standard/Reactor)

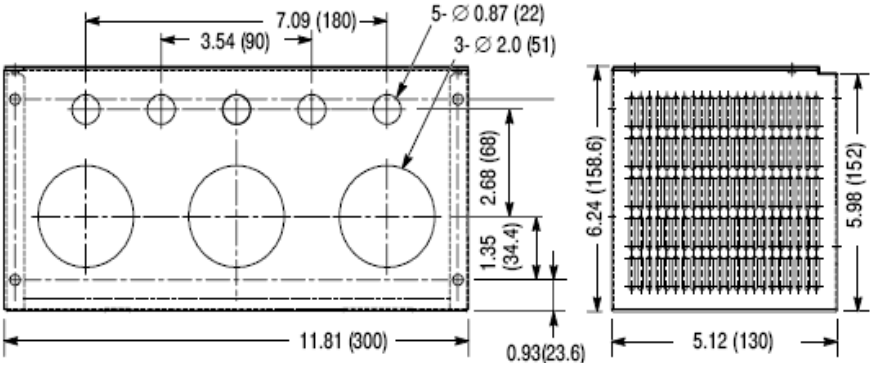

Figure D-8 Conduit Kit for VS1PF-NM1L & VS1PF-NM1M 100-125 HP (Standard/Reactor)

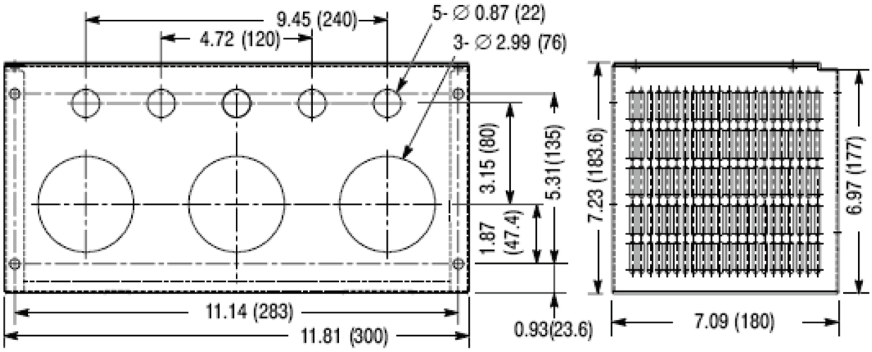

Figure D-9 VS1PF-NM1D, VS1PF-NM1F, VS1PF-NM1GH, VS1PF-NM1JK AND VSIPF-NM1LM

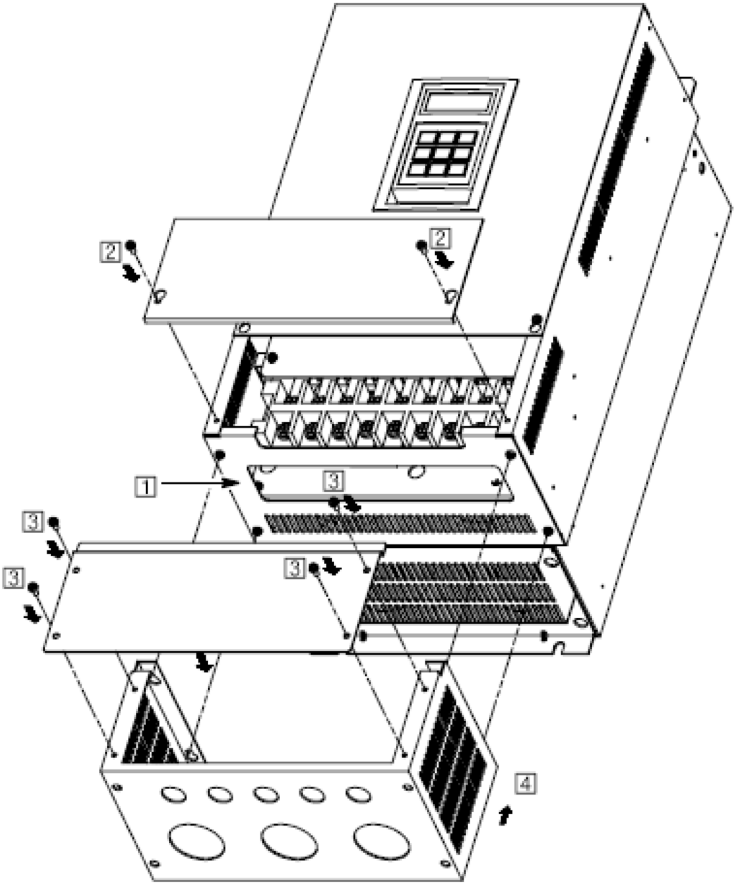

Step 1. Loosen two screws [2] that hold the cover plate in place. Retain the two screws and plate.
Step 2. Remove the lower cover [1] from the drive (Retain the 4 screws).
Step 3. Install the 4 screws removed in step 2 but do not tighten them. Leave them loose enough to slip the new conduit cover [4] over the screw heads.
Step 4. Remove 4 screws [3] and the cover from the front of the conduit kit. Retain screws and cover.
Step 5. Slide the new conduit cover [4] over the screw heads (installed in step 3) and tighten screws.
Step 6. Connect conduits and make control and power connections.
Step 7. Install the cover on conduit kit and secure using the four screws [3] removed in step 4.
Step 8. Install the drive cover plate over the two screws loosened in step 1 and tighten screws.

D.4 Recommended AC Reactor and DC Link Inductors

Table D-2 identifies the reactor rating. Contact your Baldor Sales office to order the correct reactor or inductor for your system if they are needed.

Table D-2

Catalog No.	Normal Duty HP	Heavy Duty HP	AC Reactor		DC Link Inductor	
			(mH)	Amps	(mH)	Amps
230VAC Input						
VS1PF27-1	7.5	5	0.39	30	1.37	29
VS1PF210-1	10	7.5	0.28	40	1.05	38
VS1PF215-1	15	10	0.2	59	0.74	56
VS1PF220-9	20	15	0.15	75	0.57	71
VS1PF225-9	25	20	0.12	96	0.49	91
VS1PF230-9	30	25	0.1	112	0.42	107
VS1PF240-9	40	30	0.07	160	0.34	152
460VAC Input						
VS1PF47-1	7.5	5	1.22	15	5.34	14
VS1PF410-1	10	7.5	1.14	20	4.04	19
VS1PF-415-1	15	10	0.81	30	2.76	29
VS1PF420-9/9L*	20	15	0.61	38	2.18	36
VS1PF425-9/9L*	25	20	0.45	50	1.79	48
VS1PF430-9/9L*	30	25	0.39	58	1.54	55
VS1PF440-9/9L*	40	30	0.287	80	1.191	76
VS1PF450-9/9L*	50	40	0.232	98	0.975	93
VS1PF460-9/9L*	60	50	0.195	118	0.886	112
VS1PF475-9/9L*	75	60	0.157	142	0.753	135
VS1PF4100-9/9L*	100	75	0.122	196	0.436	187
VS1PF4125-9/9L*	125	100	0.096	237	0.352	225
VS1PF4150-9L*	150	125	0.081	289	* Built-In	
VS1PF4200-9L*	200	150	0.069	341		
VS1PF4250-9L*	250	200	0.057	420		
VS1PF4300-9L*	300	250	0.042	558		
VS1PF4350-9L*	350	250	0.042	558		
VS1PF4400-9L*	400	300	0.029	799		
VS1PF4500-9	500	350	0.029	799	0.09	836
VS1PF4600-9	600	400	0.024	952	0.076	996
VS1PF4700-9	700	500	0.024	952	0.064	1195

Table D-2 Continued

Catalog No.	Normal Duty HP	Heavy Duty HP	AC Reactor		DC Link Inductor	
			(mH)	Amps	(mH)	Amps
600VAC Input						
VS1PF57-1	7.5	5	2.45	12	9.32	11
VS1PF510-1	10	7.5	1.80	16	6.27	15
VS1PF515-1	15	10	1.23	23	4.60	22
VS1PF520-9	20	15	0.900	32	3.82	30
VS1PF525-9	25	20	0.730	39	2.80	37
VS1PF530-9	30	25	0.614	47	2.27	44
VS1PF540-9	40	30	0.450	63	1.91	60
VS1PF550-9	50	40	0.365	78	1.40	75
VS1PF560-9	60	50	0.300	95	1.13	91
VS1PF575-9	75	60	0.245	116	0.933	111
VS1PF5100-9	100	75	0.180	159	0.763	151
VS1PF5125-9	125	100	0.150	190	0.560	181
VS1PF5150-9L*	150	125	0.123	223	*Built-In	

Appendix E

RS485/MODBUS Protocol

E.1 Introduction

The VS1PF AC Drive can be controlled and monitored by the sequence program of the PLC or other master module. The option card provides a terminal block for an RS485 ASCII/Modbus-RTU interface. Drives or other slave devices may be connected in a multi-drop configuration on the RS485 ASCII/ Modbus-RTU network and may be monitored or controlled by a single PLC or PC.

- RS485 ASCII and Modbus-RTU open protocols are supported.
- Computer or other host acts as Master while inverters act as slaves.
- The inverter responds to Read/Write command from Master.

This appendix defines the specifics needed to set up a VS1PF on an RS-485 network running the Modbus-RTU protocol and documents the function codes and exception codes supported by the VS1PF. For a complete definition of the Modbus-RTU protocol and the content of specific messages see www.modbus.org.

E.2 Installation

1. Connect the RS485 communication line to the (C+), (C-) and (CM) control terminals.
2. Check the connections and turn ON the inverter.
3. This table documents the parameters within the VS1PF that are related to communications:

Table E-1 VS1PF Communications Parameters

Number	Name	Comments
BAS-08	Start/Stop Source	Set to “Int485” for applications that require network control to start and stop the over the network.
BAS-09	Speed Reference Source	Set to “Int485” for applications that require network control of drive speed over the network.
I/O-(20-27)	Digital Inputs (pick one)	Set one of the digital inputs to LOC/REM to allow selection between control via the network (remote) and the selections defined in DRV-91 and DRV-92 (local).
DRV-91	Alt Start/Stop	Set to the desired method of providing start/ stop control to the drive when in local mode.
DRV-92	Alt SPD Ref Source	Set to the desired method of providing a speed reference to the drive when in local mode.
I/O-90	Drive Address	Set to the desired Modbus-RTU address (note that each device on the network must have a unique address).
I/O-91	Baud Rate	Select the baud rate utilized by the Master device on the network. All devices on the network must utilize the same baud rate.

Table E-1 VS1PF Communications Parameters Continued

Number	Name	Comments
I/O-92	COM Lost Command	Set to desired drive response to a loss of communications.
I/O-93	COM Time Out	Set to the desired lenght of time before the drive responds to a loss of communications.
I/O-94	COM Response Delay	Set to the desired delay between the receipt of a message and the response by the drive. This setting may need to be adjusted from the factory default of 5mSec based on the specifications of the RS-485 interface of the master controller for the network.

4. Make connection to the master and other slave devices. The maximum number of drives that can be connected is 31. Maximum length of communication line is 2300 ft (700m).

E.3 Operation

1. Remove all power from the VS1PF control.
2. Disconnect the motor load from the control (terminals U, V and W). (Do not connect the motor load until stable communication between the master controller and the inverter is verified.)
3. Verify master controller and the inverter connections.
4. Turn ON the inverter.
5. Start the communications program on the master controller.
6. Verify proper communications and that the VS1PF is controlled as desired.
7. Remove all power from the VS1PF control.
8. Connect the motor load to the control (terminals U, V and W).
9. Turn ON the inverter.
10. Verify proper operation. See Troubleshooting at the end of this section to aid in resolving any remaining problems.

E.4 Performance Specifications

Table E-2

Communication Method	RS485 ASCII (RS232-485 converter)
Transmission Form	Bus method, Mult-drop Link System
Applicable inverter	VS1PF
Converter	Converter with RS232 card embedded
Number of inverters connected	Maximum 31 drives connectable
Transmission distance	Less than 700m recommended (Max. 1200m)

E.5 Hardware Specifications

Table E-3

Installation	Use C+, C-, CM terminals on control terminal block
Power supply	Provided by isolated power from the inverter power supply

E.6 Communications Specifications

Table E-4

Communication Speed*	38400*, 19200, 9600, 4800, 2400, 1200 bps selectable
Control Procedure	Asynchronous communication system
Communication System	Half duplex system
Character System	RS485 ASCII (8 bit), Modbus-RTU Binary (7/8 bit)
Start/Stop bit	Start 1 bit, Stop 1/2 bit
Error check	RS485 ASCII: Checksum (2byte) Modbus-RTU: CRC16 (2byte)
Parity Check	Even/Odd

* 38400 bps speed is only available with the optional expansion board VS1PF-MBUS.

E.7 RS485 ASCII Protocol (See E.8 for Binary Modbus-RTU)

Table E-5 Command Message (Request)

ENQ	Inverter No.	CMD	Data	SUM	EOT
1 byte	2 bytes	1 byte	n bytes	2 bytes	1 byte

Table E-6 Normal Response (Acknowledge Response)

ACK	Inverter No.	CMD	Data	SUM	EOT
1 byte	2 bytes	1 byte	n * bytes	2 bytes	1 byte

Table E-7 Negative Response (Negative Acknowledge Response)

NAK	Inverter No.	CMD	Data	SUM	EOT
1 byte	2 bytes	1 byte	2 bytes	2 bytes	1 byte

Description:

- Request starts with “ENQ” and ends with “EOT”.
- Acknowledge Response starts with “ACK” and ends with “EOT”.
- Negative Acknowledge Response starts with “NAK” and ends with “EOT”.
- “Inverter Number” is the address of Inverter used and indicated in 2 byte ASCII-HEX.
  (ASCII-HEX: Hexadecimal consists of ‘0’ ~ ‘9’, ‘A’ ~ ‘F)
- *CMD: Capital letter (“IF Error” when small letter is used.)

Table E-8

Character	ASCII-HEX	Command
‘R’	52h	Read
‘W’	57h	Write
‘X’	58h	Request for monitoring
‘Y’	59h	Action for monitoring

Data: ASCII-HEX

Ex) when data value is 3000: 3000 (dec) = ‘0’ ‘B’ ‘B’ ‘8’h = 30h 42h 42h 38h

- Error code: ASCII (20h ~ 7Fh)
- Receive/Send buffer size: Receive= 39 bytes, Send=44 bytes
- Monitor register buffer: 8 Words
- SUM: to check the communication error

SUM= ASCII-HEX format of lower 8 bits of (Inverter No. + CMD + DATA)

Ex) Command Message (Request) for reading one address from address “9000”

Table E-9

ENQ	Inverter No.	CMD	Address	Number of address	SUM	EOT
05h	“01”	“R”	“3000”	“1”	“AC”	04h
1	2	1	4	1	2	1

SUM = ‘0’ + ‘1’ + ‘R’ + ‘3’ + ‘0’ + ‘0’ + ‘0’ + ‘1’
= 30h + 30h + 31h + 52h + 33h + 30h + 30h + 30h +31h
= 1A7h (Except Control value: ENQ, ACK, NAK, etc.)

E.7.1 Detailed Read Protocol

Read Request: Request for read successive ‘N’ number of WORD from address “XXXX”

Table E-10 Read Request

ENQ	Inverter No.	CMD	Address	Number of address	SUM	EOT
05h	“01” -“1F”	“R”	“XXXX”	“1” - “8” = n	“XX”	04h
1	2	1	4	1	2	1

Total bytes = 12. The quotation marks (“.”) mean character

Table E-11 Acknowledge Response

ACK	Inverter No.	CMD	Data	SUM	EOT
06h	“01” - “1F”	“R”	“XXXX”	“XX”	04h
1	2	1	N * 4	2	1

Total bytes = 7 * n * 4 = Max. 39

Table E-12 Negative Acknowledge Response

NAK	Inverter No.	CMD	Error Code	SUM	EOT
15h	“01” - “1F”	“R”	“**”	“XX”	04h
1	2	1	2	2	1

Total bytes = 9

E.7.2 Detailed Write Protocol

Table E-13 Request for Write

ENQ	Inverter No.	CMD	Address	Number of Address	SUM	EOT	EOT
05h	“01” - “1F”	“W”	“XXXX”	“1” - “8” = n	“XXXX...”	“XX”	04h
1	2	1	4	1 byte	n * 4	2	1

Total bytes = 12 + n * 4 = Max. 44

Table E-14 Acknowledge Response

ACK	Inverter No.	CMD	Data	SUM	EOT
06h	“01” - “1F”	“W”	“XXXX...”	“XX”	04h
1	2	1	n * 4	2	1

Total bytes = 7 + n * 4 = Max. 39

Table E-15 Negative Response

NAK	Inverter No.	CMD	Error Code	SUM	EOT
15h	“01” - “1F”	“W”	“**”	“XX”	04h
1	2	1	2	2	1

Total bytes = 9

E.7.3 Detailed Monitor Register Protocol

- Monitor Register
- Request for Monitor Register

Monitor Register has the function to update data periodically after assigning the necessary data to be monitored continuously.

Request for Register of ‘n’ number of Addresses (non-successive)

Table E-16 Request for Monitor Register

ENQ	Inverter No.	CMD	Number of Address	Address	SUM	EOT
05h	“01” - “1F”	“X”	“1” ~ “8” = n	“XXXX...”	“XX”	04h
1	2	1	1	n * 4	2	1

Total bytes = 8 + n * 4 = Max 40

Table E-17 Acknowledge Response

ACK	Inverter No.	CMD	SUM	EOT
06h	“01” - “1F”	“X”	“XX”	04h
1	2	1	2	1

Total bytes = 7

Table E-18 Negative Acknowledge Response

NAK	Inverter No.	CMD	Error Code	SUM	EOT
15h	“01” - “1F”	“X”	“**”	“XX”	04h
1	2	1	2	2	1

Total bytes = 9

- Monitor Action
- Action Request for Monitor Register: Request to read data registered by Monitor Register.

Table E-19 Action Request for Monitor Register

ENQ	Inverter No.	CMD	SUM	EOT
05h	“01” - “1F”	“Y”	“XX”	04h
1	2	1	2	1

Total bytes = 7

Table E-20 Acknowledge Response

ACK	Inverter No.	CMD	Data	SUM	EOT
06h	“01” - “1F””	“Y”	“XXXX...”	“XX”	04h
1	2	1	n * 4 byte	2 byte	1 byte

Total bytes = 7 + n * 4 = Max 39

Table E-21 Negative Response

NAK	Inverter No.	CMD	Error Code	SUM	EOT
15h	“01” ~ “FA”	“Y”	“**”	“XX”	04h
1	2	1	2	2	1

Total bytes = 9

E.7.4 Error Code:

Table E-22

Error Code	Display	Description
Illegal Function	IF	When the command received cannot be executed in the option card. It means that there is no corresponding command.
Illegal Data Address	IA	When parameter address received is invalid. When data is executed without Monitor Register.
Illegal Data Value	ID	When the data received is invalid.
Write Mode Error	WM	In case of Read Only or Write Disabled during operation.
Frame Error	FE	When the frame size, internal Num or Sum is incorrect.
Time Out Error	TO	When DPRAM communication is not working within a certain time.
DPRAM Off Line	DO	When DPRAM is Off Line.
Invalid ID Number	IN	When Inverter Number is incorrect.
Undefined Condition	UC	Except for the cases above.

E.8 Modbus-RTU Protocol

Use Modbus-RTU protocol. This is Open Protocol. Computer or other host acts as Master while inverters act as slaves. The inverter responds to Read/Write command from Master.
Note: Not all Modbus-RTU functions are supported by this communications board.

E.8.1 Available Function Code

Table E-23

Function Code	Description
3	Read Hold Register
4	Read Input Register
6	Preset Single Register
16	Preset Multiple Register

E.8.2 Exception Code

Table E-24

Exception Code	Display	Description
0x01		Illegal Function
0x02		Illegal Data Address
0x03		Illegal Data Value
0x06		Slave Device Busy
User Defined	0x15	1. Write Disable (Address for 0x0004 value is 0). 2. Read only parameter
User Defined	0x16	Framing Error

E.9 Baud Rate

1200, 2400, 4800, 9600, 19200, 38400 bps rates are available (factory setting is 9600 bps). See VS1PF parameter I/O-91 to change setting (MN763).

E.10 Broadcast Function

- The broadcast function is used when Command is given to all inverters connected to network.
- In the case of RS485, all inverters run without response (Slave>Master) when Command is given to inverter number 255 (0xFF).
- In the case of Modbus-RTU, all inverters run without response (Slave>Master) when Command is given to Inverter Number 0 (0x00).

E.11 Troubleshooting

Refer to this chapter when occurring problem in communication with computer while using this option card is encountered.

Table E-25 CPU LED Malfunction

Expected State	The inverter is not working normally or the inverter and the option card are not connected properly.
Corrective Measures	1. Verify the power is applied to the inverter. 2. Verify the option card is installed properly within the inverter when the inverter is working normally.

Table E-26 RXD and TXD LEDs Malfunction

Check Points	Corrective Measures
Is the power applied to the converter?	Apply power to the converter.
Is the connection between the converter and the computer correct?	Refer to the converter manual.
Is the communication card installed within the inverter properly?	Refer to installation.
Does Master start the communication?	Start the communication.
Is the communication speed setting of the inverter correct?	Refer to installation.
Is the data format of User program correct?	Modify User program. User-made S/W for PC.
Is the communication between the converter and the option card correct?	Refer to installation.

Table E-27 ERR LED is working

State	Corrective Measures
Blinking intermittently	In case that the option card is receiving wrong data due to Noise or other causes, it is normal.
Blinking oppositely to CPU LED	Network is not communicated during TimeOut Setting. Verify the state of Master, (VS1PF: I/O-93)
Blinking simultaneously CPU LED	In case of occurring the communication trouble between the option card and the inverter, Power up and down the inverter. If this problem occurs continuously, contact Baldor district office.

Refer to COM group of VS1PF for Frequency (Speed)/Run command given by the option card.

E.12 Parameter Codes (All parameter addresses are Hex values)

E.12.1 Common Area

<Common Area>: Common Area addresses are to be used commonly regardless of inverter models. Some addresses are used only for specific inverter models.
When data is changed by Common Area parameter, its data is not saved. That is, the changed data is effective in the present state but the data is reset to the previous value after the inverter is reset or powered up/down. Even though the inverter is reset or powered up/down, the changed data is effective in case of changing the data by each group parameter, not the Common Area.

Table E-1 Common Area Addresses

Address	Parameter	Unit	R/W	Data Value (Description)			
0x0000	Rating	-	RO	4-7.5 hp, 5-10 hp, 6-15 hp, 7-20 hp, 8-25 hp, 9-30 hp, 10-40 hp, 11-50 hp, 12-60 hp, 13-75 hp, 14-100 hp, 15-125 hp, 16-150 hp, 17-200 hp, 18-250 hp, 19-300 hp, 20-350 hp, 21-400 hp, 22-500 hp, 23-600 hp, 24-700 hp			
0x0001	Input Volts	-	RO	0: 230VAC Class 1: 460VAC Class 2: 575VAC Class			
0x0002	S/W Version	-	RO	Ex) 0x0100: Ver 1.00, 0x0110 : Ver 1.10			
0x0004	Speed Reference	0.01Hz	RW	Ex) 2796D = 27.96Hz			
0x0005	Frequency Reference	0.01Hz	RW	Starting freq. ~ Max freq.			
0x0006	Run/Stop Command		RW	BIT 0	Stop		
				BIT 1	Forward Run (FX)		
				BIT 2	Reverse Run (RX)		
				BIT 3	Fault Reset (0-1)		
				BIT 4	Emergency Stop		
				BIT 5	Not Used		
			RO	BIT 6	Run/Stop	0	Terminal
						1	Keypad
				BIT 7		2	Option
						3	Int. 485
				BIT 8		0-16	Multi-step Speed Freq.
						17-19	Up Down Operation (Up, Down, UD Zero)
				BIT 9		20-21	Not Used
						22-25	Analog Operation (V1, V1S, I, VII)
				BIT 10		26	Pulse
						27	Sub
				BIT 11		28	Int. 48
						29	Option
				BIT 12		30	Jog
						31	PID
				BIT 13	Not Used		
				BIT 14	Not Used		
				BIT 15	Set when Network malfunction occurs.		

Table E-1 Common Area Addresses Continued

Address	Parameter	Unit	R/W	Data Value (Description)	
0x0007	Acceleration Time	0.1 sec	RW		
0x0008	Deceleration Time	0.1 sec	RW		
0x0009	Output Current	0.1 A	RO		
0x000A	Output Frequency	0.01 Hz	RO		
0x000B	Output Voltage	0.1 V	RO		
0x000C	DC Link Voltage	0.1 V	RO		
0x000CD	Ouput Power	0.1 kW	RO		
0x000E	Operating Status		RO	BIT 0	Stop
				BIT 1	Forward Run (FX)
				BIT 2	Reverse Run (RX)
				BIT 3	Fault (Trip)
				BIT 4	Accelerating
				BIT 5	Decelerating
				BIT 6	Speed Arrival
			RO	BIT 7	Forward Command
				BIT 8	DC Braking
				BIT 9	Not Used
				BIT 10	Brake Open
				BIT 11	Forward Run Command
				BIT 12	Reverse Run Command
				BIT 13	REM. R/S (Int. 485, OPT)
				BIT 14	REM. Freq. (int. 485, OPT)
				BIT 15	Not Used

Table E-1 Common Area Addresses Continued

Address	Parameter	Unit	R/W	Data Value (Description)	
0x000F	Trip Information		RO	BIT 0	OCT1
				BIT 1	OV
				BIT 2	EXT-A
				BIT 3	BX
				BIT 4	LV
				BIT 5	Not Used
				BIT 6	GF (Ground Fault)
				BIT 7	OH (Inverter Overheat)
				BIT 8	ETH (Motor Overheat)
				BIT 9	OLT (Overload Trip)
				BIT 10	HW-Diag
				BIT 11	Not Used
				BIT 12	OCT2
				BIT 13	OPT (Option Error)
				BIT 14	PO (Phase Open)
				BIT 15	IOLT
0x0010	Input Terminal Status	-	R	BIT 0	M1
				BIT 1	M2
				BIT 2	M3
				BIT 3	M4
				BIT 4	M5
				BIT 5	M6
				BIT 6	M7
				BIT 7	M8
				BIT 8	P4
				BIT 9	P5
				BIT 10	P6
				BIT 11-15	Not Used

Table E-1 Common Area Addresses Continued

Address	Parameter	Unit	R/W	Data Value (Description)	
0X0011	Output Terminal Status	-	R	BIT 0	AUX1
				BIT 1	AUX2
				BIT 2	AUX3
				BIT 3	AUX4
				BIT 4	Q1 (OC1)
				BIT 5	Q2 (OC2)
				BIT 6	Q3 (OC3)
				BIT 7	30AC
				BIT 8-15	Not Used
0x0012	V1	-	R		0 - FFC0
0x0013	V2		R		0 - FFC0
0x0014	I		R		0 - FFC0
0x0015	RPM		R		
0x001A	Unit Display		R	0: Hz, 1:RPM	
0x001B	Pole Number		R		
0x001C	Custom Version		R		
0xFFFF	Drive Series		R	9: VS1PF	

* Refer to MN763 VS1PF manual for the communication address assignments.

E.12.2 Communication Option Setting

Table E-2

Address	NO.	Description	Factory Setting	Maximum	Minimum
9601	COM #01	Opt B/D	0	7	0
9602	COM #02	Opt Mode	0	3	0
9603	COM #03	Opt Version	2.2	-	-
963C	COM #60	Parity/Stop	0	3	0

* Inverter Number or communication speed is set in I/O-90, 91.

COM-01 [Opt B/D]

- Indicates the type of the option card installed.
- This value is automatically displayed when the option card is installed.

COM-02 [Opt Mode]

- Determines whether Run/Stop and Freq. command are set via communication.

Table E-3

Setting	Display	Description
0 (Default)	None	None command
1	Command	Run/Stop command via communication
2	Freq	Frequency command via communication
3	Cmd + Freq	Run/Stop and Frequency command via communication

COM-03 [Opt Version]

- Displays the version of the option card.

COM-60 [Parity/Stop]

- Sets Stop Bite or Parity Check.

Table E-4

Setting	Display	Description
0	8None/1Stop	Data: 8bit, Stop: 1bit, Parity: None
1	8None/2Stop	Data: 8bit, Stop: 2bit, Parity: None
2	8Even/1Stop	Data: 8bit, Stop: 1bit, Parity: even
3	8Odd/1Stop	Data: 8bit, Stop: 1bit, Parity: odd

Baldor District Offices

UNITED STATES

ARIZONA
PHOENIX
4211 S 43RD PLACE
PHOENIX, AZ 85040
PHONE: 602-470-0407
FAX: 602-470-0464

ARKANSAS
CLARKSVILLE
1001 COLLEGE AVE.
CLARKSVILLE, AR 72830
PHONE: 479-754-9108
FAX: 479-754-9205

CALIFORNIA
LOS ANGELES
6480 FLOTILLA
COMMERCE, CA 90040
PHONE: 323-724-6771
FAX: 323-721-5859

HAYWARD
21056 FORBES STREET
HAYWARD, CA 94545
PHONE: 510-785-9900
FAX: 510-785-9910

COLORADO
DENVER
3855 FOREST STREET
DENVER, CO 80207
PHONE: 303-623-0127
FAX: 303-595-3772

CONNECTICUT
WALLINGFORD
65 SOUTH TURNPIKE ROAD
WALLINGFORD, CT 06492
PHONE: 203-269-1354
FAX: 203-269-5485

FLORIDA
TAMPA/PUERTO RICO/ VIRGIN ISLANDS
3906 EAST 11TH AVENUE
TAMPA, FL 33605
PHONE: 813-248-5078
FAX: 813-247-2984

GEORGIA
ATLANTA
62 TECHNOLOGY DR.
ALPHARETTA, GA 30005
PHONE: 770-772-7000
FAX: 770-772-7200

ILLINOIS
CHICAGO
4 SAMMONS COURT
BOLINGBROOK, IL 60440
PHONE: 630-296-1400
FAX: 630-226-9420

INDIANA
INDIANAPOLIS
5525 W. MINNESOTA STREET
INDIANAPOLIS, IN 46241
PHONE: 317-246-5100
FAX: 317-246-5110

IOWA
DES MOINES
1800 DIXON STREET, SUITE C
DES MOINES, IA 50316
PHONE: 515-263-6929
FAX: 515-263-6515

MARYLAND
BALTIMORE
6660 SANTA BARBARA RD.
SUITE 22-24
ELKRIDGE, MD 21075
PHONE: 410-579-2135
FAX: 410-579-2677

MASSACHUSETTS
BOSTON
6 PULLMAN STREET
WORCESTER, MA 01606
PHONE: 508-854-0708
FAX: 508-854-0291

MICHIGAN
DETROIT
5993 PROGRESS DRIVE
STERLING HEIGHTS, MI 48312
PHONE: 586-978-9800
FAX: 586-978-9969

MINNESOTA
MINNEAPOLIS
21080 134TH AVE. NORTH
ROGERS, MN 55374
PHONE: 763-428-3633
FAX: 763-428-4551

MISSOURI
ST LOUIS
422 INDUSTRIAL DRIVE
MARYLAND HEIGHTS, MO 63043
PHONE: 314-298-1800
FAX: 314-298-7660

KANSAS CITY
1501 BEDFORD AVENUE
NORTH KANSAS CITY, MO 64116
PHONE: 816-587-0272
FAX: 816-587-3735

NEW YORK
AUBURN
ONE ELLIS DRIVE
AUBURN, NY 13021
PHONE: 315-255-3403
FAX: 315-253-9923

NORTH CAROLINA
GREENSBORO
1220 ROTHERWOOD ROAD
GREENSBORO, NC 27406
PHONE: 336-272-6104
FAX: 336-273-6628

OHIO
CINCINNATI
2929 CRESCENTVILLE ROAD
WEST CHESTER, OH 45069
PHONE: 513-771-2600
FAX: 513-772-2219

CLEVELAND
8929 FREEWAY DRIVE
MACEDONIA, OH 44056
PHONE: 330-468-4777
FAX: 330-468-4778

OKLAHOMA
TULSA
7170 S. BRADEN, SUITE 140
TULSA, OK 74136
PHONE: 918-366-9320
FAX: 918-366-9338

OREGON
PORTLAND
20393 SW AVERY COURT
TUALATIN, OR 97062
PHONE: 503-691-9010
FAX: 503-691-9012

PENNSYLVANIA
PHILADELPHIA
1035 THOMAS BUSCH
MEMORIAL HIGHWAY
PENNSAUKEN, NJ 08110
PHONE: 856-661-1442
FAX: 856-663-6363

PITTSBURGH
159 PROMINENCE DRIVE
NEW KENSINGTON, PA 15068
PHONE: 724-889-0092
FAX: 724-889-0094

TENNESSEE
MEMPHIS
4000 WINCHESTER ROAD
MEMPHIS, TN 38118
PHONE: 901-365-2020
FAX: 901-365-3914

TEXAS
DALLAS
3040 QUEBEC STREET
DALLAS, TX 75247
PHONE: 214-634-7271
FAX: 214-634-8874

HOUSTON
10355 W. LITTLE YORK RD.
SUITE 300
HOUSTON, TX 77041
PHONE: (281) 977-6500
FAX: (281) 977-6510

UTAH
SALT LAKE CITY
2230 SOUTH MAIN STREET
SALT LAKE CITY, UT 84115
PHONE: 801-832-0127
FAX: 801-832-8911

WISCONSIN
MILWAUKEE
1960 SOUTH CALHOUN ROAD
NEW BERLIN, WI 53151
PHONE: 262-784-5940
FAX: 262-784-1215

INTERNATIONAL SALES
FORT SMITH, AR
P.O. BOX 2400
FORT SMITH, AR 72902
PHONE: 479-646-4711
FAX: 479-648-5895

CANADA
EDMONTON, ALBERTA
4053-92 STREET
EDMONTON, ALBERTA T6E 6R8
PHONE: 780-434-4900
FAX: 780-438-2600

TORONTO
OAKVILLE, ONTARIO
2750 COVENTRY ROAD
OAKVILLE, ONTARIO L6H 6R1
PHONE: 905-829-3301
FAX: 905-829-3302

MONTREAL, QUEBEC
5155, J.A. BOMBARDIER
ST-HUBERT (QUÉBEC) CANADA
J3Z 1G4
PHONE: 514-933-2711
FAX: 514-933-8639

VANCOUVER, BRITISH COLUMBIA
1538 KEBET WAY
PORT COQUITLAM,
BRITISH COLUMBIA V3C 5M5
PHONE 604-421-2822
FAX: 604-421-3113

WINNIPEG, MANITOBA
54 PRINCESS STREET
WINNIPEG, MANITOBA R3B 1K2
PHONE: 204-942-5205
FAX: 204-956-4251

AUSTRALIA
UNIT 3, 6 STANTON ROAD
SEVEN HILLS, NSW 2147,
AUSTRALIA
PHONE: (61) (2) 9674 5455
FAX: (61) (2) 9674 2495

UNIT 8, 5 KELLETTS ROAD
ROWVILLE, VICTORIA, 3178
AUSTRALIA
PHONE: (61) (3) 9753 4355
FAX: (61) (3) 9753 4366

EL SALVADOR
RESIDENCIAL PINARES DE SUIZA
POL. 15 #44,
NVA. SAN SALVADOR,
EL SALVADOR
PHONE: +503 2288-1519
FAX: +503 2288-1518

CHILE
LUIS THAYER OJEDA 166,
OF 402 - PROVIDENCIA
SANTIAGO, CHILE
PHONE: +56 2 816 9900

CHINA
160 SONG SHENG ROAD
SONGJIANG INDUSTRY ZONE
SHANGHAI 201613, CHINA
PHONE: +86 21 5760 5335
FAX : +86 21 5760 5336

GERMANY
DIESELSTRASSE 22
D-85551 KIRCHHEIM
MUNICH, GERMANY
PHONE: +49 89 90 5080
FAX: +49 89 90 50 8492

INDIA
14, COMMERCE AVENUE
MAHAGANESH COLONY
PAUD ROAD
PUNE - 411038
MAHARASHTRA, INDIA
PHONE: +91 20 25 45 27 17 / 18
FAX: +91 20 25 45 27 19

INDONESIA
TALAVERA OFFICE PARK,
28TH FLOOR, SUITE M18
JI. T.B. SIMATUPANG, KAV. 22-26
JAKARTA 12430, INDONESIA
PHONE: +62 21 7599 9879
FAX: + 62 21 7599 9878

ITALY
BALDOR ASR AG
SUCCURSALE DI MENDRISIO
VIA BORROMINI, 20A
CH-6850 MENDRISIO
SWITZERLAND
PHONE: 0041 91 640 99 50
FAX: 0041 91 630 26 33

JAPAN
DIA BLDG 802,
2-21-1 TSURUYA-CHO,
KANAGAWA-KU
YOKOHAMA, 221-0835, JAPAN
PHONE: 81-45-412-4506
FAX: 81-45-412-4507

MEXICO
LEON, GUANAJUATO
KM. 2.0 BLVD. AEROPUERTO
LEÓN 37545, GUANAJUATO,
MÉXICO
PHONE: +52 477 761 2030
FAX: +52 477 761 2010

MIDDLE EAST & NORTH AFRICA
VSE INTERNATIONAL CORP.
P. O. BOX 5618
BUFFALO GROVE, IL 60089-5618
PHONE: 847 590 5547
FAX: 847 590 5587

PANAMA
AVE. RICARDO J. ALFARO
EDIFICIO SUN TOWERS MALL
PISO 2, LOCAL 55
CIUDAD DE PANAMÁ, PANAMÁ
PHONE: +507 236-5155
FAX: +507 236-0591

SINGAPORE
18 KAKI BUKIT ROAD 3, #03-09
ENTREPRENEUR BUSINESS
CENTRE
SINGAPORE 415978
PHONE: (65) 6744 2572
FAX: (65) 6747 1708

SWITZERLAND
POSTFACH 73
SCHUTZENSTRASSE 59
CH-8245 FEUERTHALEN
SWITZERLAND
PHONE: +41 52 647 4700
FAX: +41 52 659 2394

TAIWAN
1F, NO 126 WENSHAN 3RD
STREET,
NANTUN DISTRICT,
TAICHUNG CITY 408
TAIWAN R.O.C
PHONE: (886) 4 238 04235
FAX: (886) 4 238 04463

UNITED KINGDOM
6 BRISTOL DISTRIBUTION PARK
HAWKLEY DRIVE
BRISTOL BS32 0BF U.K.
PHONE: +44 1454 850000
FAX: +44 1454 859001

VENEZUELA
AV. ROMA. QTA EL MILAGRO. URB.
CALIFORNIA NORTE
CARACAS, 1070
VENEZUELA
PHONE/FAX: +58 212 272 7343
MOBILE: +58 414 114 8623

763-0110

BALDOR®

Baldor Electric Company
World Headquarters
P.O. Box 2400, Fort Smith, AR 72902-2400 U.S.A., Ph: (1) 479.646.4711, Fax (1) 479.648.5792,
International Fax (1) 479.648.5895
www.baldor.com