Series H2 AC
V/Hz and Open Vector Control

Installation & Operating Manual

7/06

MN740

DRIVE CENTRE
Industrial Automation Systems Integrators

57 Galaxy Blvd., Units 1 & 2, Toronto, ON M9W 5P1
TEL: (416) 231-6767
www.drivecentre.ca

Important:
Be sure to check **www.baldor.com** for the latest software, firmware and drivers for your H2 product.

Table of Contents

Section 1
Quick Start Guide 1-1
Section 2
General Information 2-1
CE Compliance 2-1
Overview 2-1
Limited Warranty 2-2
Safety Notice 2-3
Section 3
Receiving & Installation 3-1
Receiving & Inspection 3-1
Location and Mounting 3-1
Cover Removal 3-2
Power Conditioning 3-4
System Grounding 3-4
Line Impedance 3-5
Line Reactors 3-5
Load Reactors 3-5
Power Disconnect 3-6
Protective Devices 3-6
Reduced Input Voltage Derating 3-6
Electrical Installation 3-6
Optional Filter/Reactor 3-6
3 Phase Power and Motor Connections 3-8
Operating a Three Phase Control on Single Phase Input Power 3-9
Single Phase Power and Motor Connections 3-10
M−Contactor 3-12
Optional Dynamic Brake Hardware 3-13
External Trip Input 3-13
Control Board Connections 3-13
Analog Inputs 3-14
Analog Outputs 3-15
Opto Isolated Inputs 3-16
Operating Modes 3-17
Keypad 3-17
Standard Run 2Wire 3-18
Standard Run 3Wire 3-19
15 Preset Speeds 3-20
Fan Pump 2Wire 3-21
Fan Pump 3Wire 3-22
Process Control 3-23
3 Speed Analog 2Wire 3-24
3 Speed Analog 3Wire 3-25
E−POT 2Wire 3-26
E−POT 3Wire 3-27
Network 3-28
Profile Run 3-29
Bipolar 3-30
Multiple Parameter Sets 3-31
PLC 3-32
Digital Outputs 3-33
Relay Outputs 3-33
USB Port 3-33
Communication Expansion Boards 3-34
RS485 Modbus 3-34

Opto-Isolated Inputs . . . 3-35
Opto Isolated Outputs . . . 3-35
Pre-Operation Checklist . . . 3-36
Powerup Procedure . . . 3-36
Workbench . . . 3-37
Install USB Driver for H2 Control . . . 3-37
Install Workbench . . . 3-38
Update Firmware . . . 3-40
Section 4
Programming and Operation . . . 4-1
Overview . . . 4-1
Status Display Mode . . . 4-2
Menu Display . . . 4-3
Quick Setup . . . 4-4
Save Parameter Values . . . 4-7
Restore Parameter Values . . . 4-8
Programming . . . 4-9
Event Log . . . 4-10
Diagnostics . . . 4-10
Display Options . . . 4-13
Operating the Control from the Keypad . . . 4-13
Accessing the Keypad JOG Command . . . 4-14
Speed Adjustment using Local Speed Reference . . . 4-14
Section 5
Troubleshooting . . . 5-1
Event Log . . . 5-1
Diagnostics Information . . . 5-6
Fault Messages . . . 5-9
Electrical Noise Considerations . . . 5-10
Section 6
Specifications, Ratings & Dimensions . . . 6-1
Specifications . . . 6-1
Catalog Number Identification . . . 6-4
Ratings . . . 6-5
Terminal Tightening Torque Specifications . . . 6-7
Mounting Dimensions . . . 6-8
Section 7
H2 PLC Mode Description . . . 7-1
Section 8
H2 Composite Reference Description . . . 8-1
Section 9
H2 Monitor and RTC . . . 9-1
Appendix A
Optional Equipment . . . A-1
Dynamic Braking (DB) Hardware . . . A-1
Keypad Extension Cable . . . A-1
Expansion Boards . . . A-2
Series H to H2 Conversion . . . A-3
Appendix B
Parameter Values . . . B-1
Appendix C
CE Guidelines . . . C-1
Appendix D
Remote Keypad Mounting Template . . . D-1

Section 1
Quick Start Guide

Overview

If you are an experienced user of Baldor controls, you are probably already familiar with the keypad programming and keypad operation methods. If so, this quick start guide has been prepared for you. This procedure will help get your system up and running in the keypad mode quickly and allows motor and control operation to be verified. This procedure assumes that the Control, Motor and Dynamic Brake hardware are correctly installed (see Section 3 for procedures) and that you have an understanding of the keypad programming & operation procedures Figure 1-1 shows minimum connection requirements. It is not necessary to wire the terminal strip to operate in the Keypad mode (Section 3 describes terminal strip wiring procedures).
The quick start procedure is as follows:

1. Read the Safety Notice and Precautions in section 2 of this manual.
2. Mount the control. Refer to Section 3 “Physical Location” procedure.
3. Connect AC power, (Figure 1-1).
4. Connect the motor, (Figure 1-1). Do not couple the motor shaft to the load until auto tune is complete.
5. Install Dynamic brake hardware, if required. If an external resistor is to be installed, the internal resistor must first be removed, see Figure 1-1.

Quick Start Checklist Check of electrical items.

Caution: After completing the installation but before you apply power, be sure to check the following items.

1. Verify AC line voltage at source matches control rating.
2. Inspect all power connections for accuracy, workmanship and torques as well as compliance to codes.
3. Verify control and motor are grounded to each other and the control is connected to earth ground.
4. Check all signal wiring for accuracy, workmanship and tightness and compliance to codes..
5. Be certain all brake coils, contactors and relay coils have noise suppression. This should be an R-C filter for AC coils and reverse polarity diodes for DC coils. MOV type transient suppression is not adequate.

WARNING: Make sure that unexpected operation of the motor shaft during start up will not cause injury to personnel or damage to equipment.

Quick Start Procedure

Initial Conditions

Verify the Control, Motor and Dynamic Brake hardware are wired according to the procedures described in Section 3 of this manual. Become familiar with the keypad programming and keypad operation of the control as described in Section 4 of this manual.

1. Remove all power from the control.
2. Verify that any enable inputs to J2-8 are open.
3. Disconnect the motor from the load (including coupling or inertia wheels). If the load cannot be disconnected, refer to Section 6 and manually tune the control. After manual tuning, perform steps 8 through 18.
4. Turn power on. Be sure there are no faults.
5. Set the Level 2 Drive Limits block, “OPERATING ZONE” parameter as desired (STD CONST TQ, STD VAR TQ, QUIET CONST TQ or QUIET VAR TQ).
6. If external dynamic brake hardware is used, set the Level 2 Brake Adjust block “Resistor Ohms” and “Resistor Watts” parameters.
7. Enable the control (J2–8 connect to J3–24).

WARNING: The motor shaft will rotate during this procedure. Be certain that unexpected motor shaft movement will not cause injury to personnel or damage to equipment.

8. Select Quick Setup from the main Keypad menu. Perform each step including auto tune.
9. Set the Level 1 Motor Control block, “V/F Profile” and Three Point parameters for your application.
10. If the load is a high initial starting torque type, the torque boost and Accel time may need to be increased. Set the Level 1 Motor Control block, Boost parameters and the Level 1 Accel/Decel parameters as required.
11. Remove all power from the control.
12. Couple the motor to its load.
13. Verify freedom of motion of motor shaft.
14. Verify the motor coupling is tight without backlash.
15. Verify the holding brakes if any, are properly adjusted to fully release and set to the desired torque value.
16. Turn power on. Be sure no errors are displayed.
17. Run the drive from the keypad using one of the following: the arrow keys for direct speed control, a keypad entered speed or the JOG mode.
18. Select and program additional parameters to suit your application.

The control is now ready for use the in keypad mode. If a different operating mode is desired, refer to Section 3 Operating Modes and Section 4 Programming and Operation.

Figure 1-1 Minimum Connection Diagram

Minimum Signal Connections

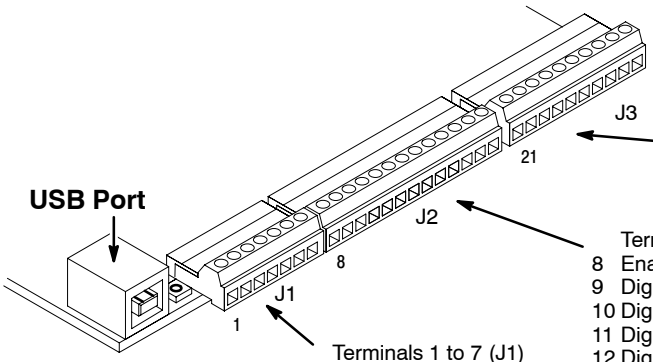

Terminals 1 to 7 (J1)
1 User Analog Return
2 Analog Input #1
3 Analog Ref. Power
4 Analog Input #2 +
5 Analog Input #2 –
6 Analog Output #1
7 Analog Output #2

For keypad operation, only Enable (J2–8) is required.

Terminals 8 to 20 (J2)
8 Enable Input
9 Digital Input #1
10 Digital Input #2
11 Digital Input #3
12 Digital Input #4
13 Digital Input #5
14 Digital Input #6
15 Digital Input #7
16 Digital Input #8
17 Digital Out #1+ (Collector)
18 Digital Out #1– (Emitter)
19 Digital Out #2+ (Collector)
20 Digital Out #2– (Emitter)

Terminals 21 to 30 (J3)
21 External User +24V Return
22 External User +24V
23 Internal +24V
24 Internal +24V Return
25 Relay Out 1 NC
26 Relay Out 1 COM
27 Relay Out 1 NO
28 Relay Out 2 NC
29 Relay Out 2 COM
30 Relay Out 2 NO

AC Power & Motor Connections

Size AA Enclosure

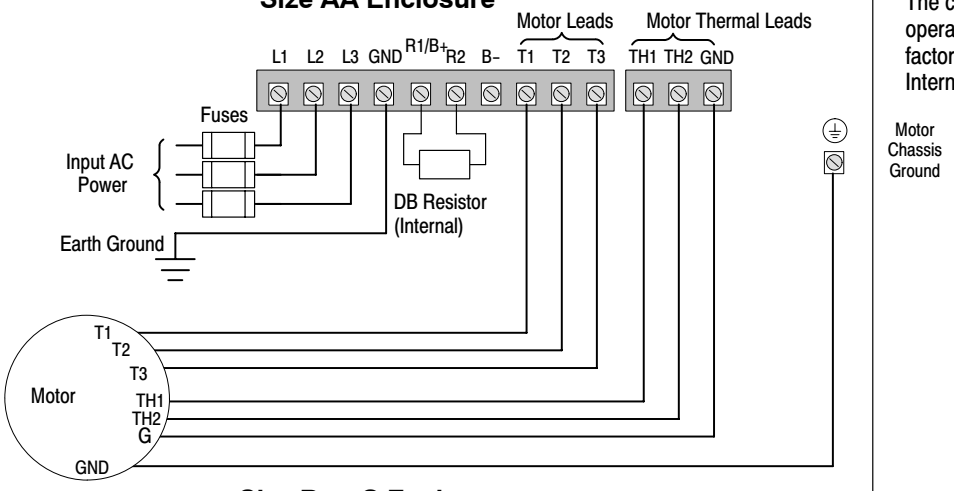

Size B or C Enclosure

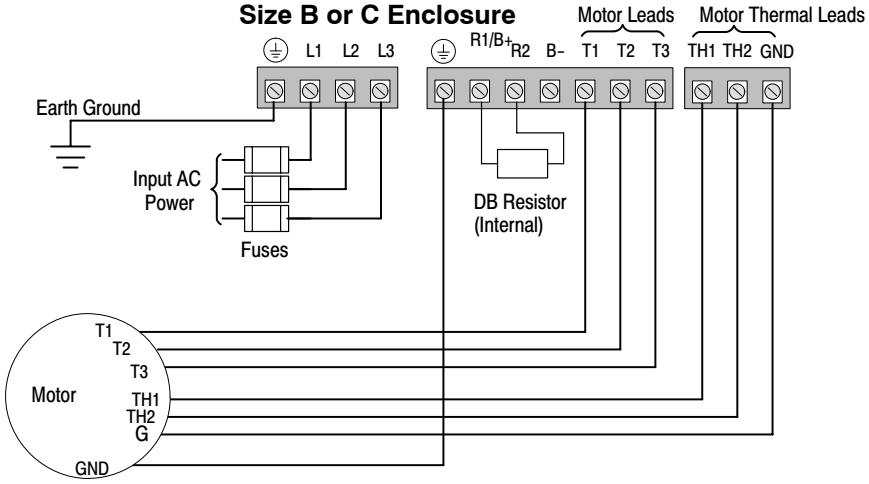

Note:
The control enable input must be active to allow operation. Therefore, J2–8 Enable is connected by a factory installed jumper to J3–24. This uses the Internal supply and provides an active low at J2–8.

See Recommended Tightening Torques in Section 6.

Section 2
General Information

CE Compliance

A custom unit may be required, contact Baldor. Compliance to Directive 89/336/EEC is the responsibility of the system integrator. A control, motor and all system components must have proper shielding grounding and filtering as described in MN1383. Please refer to MN1383 for installation techniques for CE compliance.

Overview

The Baldor H2 control is a PWM inverter motor control . The control converts AC line power to fixed DC power. The DC power is then pulse width modulated into synthesized three-phase AC line voltage for the motor. In this way, the control converts the fixed input frequency to variable output frequency to cause the motor to have variable speed operation. Encoderless Vector control operation is also allowed.

The control's rated output power is based on the use of a NEMA design B four pole motor and 60Hz operation at nominal rated input voltage. If any other type of motor is used, the control should be sized to the motor using the rated current of the motor.

The control may be used in various applications. It may be programmed by the user to operate in four different operating zones; standard or quiet and constant torque or variable torque. It can also be configured to operate in a number of modes depending upon the application requirements and user preference.

It is the responsibility of the user to determine the optimum operating zone and mode to interface the control to the application. These choices are made with the keypad as explained in Section 4 of this manual.

Limited Warranty

For a period of two (2) years from the date of original purchase, BALDOR will repair or replace without charge controls and accessories which our examination proves to be defective in material or workmanship. This warranty is valid if the unit has not been tampered with by unauthorized persons, misused, abused, or improperly installed and has been used in accordance with the instructions and/or ratings supplied. This warranty is in lieu of any other warranty or guarantee expressed or implied. BALDOR shall not be held responsible for any expense (including installation and removal), inconvenience, or consequential damage, including injury to any person or property caused by items of our manufacture or sale. (Some states do not allow exclusion or limitation of incidental or consequential damages, so the above exclusion may not apply.) In any event, BALDOR's total liability, under all circumstances, shall not exceed the full purchase price of the control. Claims for purchase price refunds, repairs, or replacements must be referred to BALDOR with all pertinent data as to the defect, the date purchased, the task performed by the control, and the problem encountered. No liability is assumed for expendable items such as fuses.

Goods may be returned only with written notification including a BALDOR Return Authorization Number and any return shipments must be prepaid.

Safety Notice This equipment contains voltages that may be as high as 1000 volts! Electrical shock can cause serious or fatal injury. Only qualified personnel should attempt the start−up procedure or troubleshoot this equipment.

This equipment may be connected to other machines that have rotating parts or parts that are driven by this equipment. Improper use can cause serious or fatal injury. Only qualified personnel should attempt the start−up procedure or troubleshoot this equipment.

PRECAUTIONS

WARNING: Do not touch any circuit board, power device or electrical connection before you first ensure that power has been disconnected and there is no high voltage present from this equipment or other equipment to which it is connected. Electrical shock can cause serious or fatal injury. Only qualified personnel should attempt the start−up procedure or troubleshoot this equipment.

WARNING: Be sure that you are completely familiar with the safe operation of this equipment. This equipment may be connected to other machines that have rotating parts or parts that are controlled by this equipment. Improper use can cause serious or fatal injury. Only qualified personnel should attempt the start−up procedure or troubleshoot this equipment.

WARNING: Do not use motor overload relays with an automatic reset feature. These are dangerous since the process may injure someone if a sudden or unexpected automatic restart occurs. If manual reset relays are not available, disable the automatic restart feature using external control wiring.

WARNING: This unit has an automatic restart feature that will start the motor whenever input power is applied and a RUN (FWD or REV) command is issued. If an automatic restart of the motor could cause injury to personnel, the automatic restart feature should be disabled by changing the Level 2 Miscellaneous block, Auto Restart parameter to Manual.

WARNING: Be sure the system is properly grounded before applying power. Do not apply AC power before you ensure that all grounding instructions have been followed. Electrical shock can cause serious or fatal injury.

WARNING: Do not remove cover for at least five (5) minutes after AC power is disconnected to allow capacitors to discharge. Dangerous voltages are present inside the equipment. Electrical shock can cause serious or fatal injury.

WARNING: Improper operation of control may cause violent motion of the motor shaft and driven equipment. Be certain that unexpected motor shaft movement will not cause injury to personnel or damage to equipment. Certain failure modes of the control can produce peak torque of several times the rated motor torque.

WARNING: Motor circuit may have high voltage present whenever AC power is applied, even when motor is not rotating. Electrical shock can cause serious or fatal injury.

WARNING: Dynamic brake resistors may generate enough heat to ignite combustible materials. Keep all combustible materials and flammable vapors away from brake resistors.

WARNING: The motor shaft will rotate during the autotune procedure. Be certain that unexpected motor shaft movement will not cause injury to personnel or damage to equipment.

Continued on next page

Caution: **Disconnect motor leads (T1, T2 and T3) from control before you perform a "Megger" test on the motor. Failure to disconnect motor from the control will result in extensive damage to the control. The control is tested at the factory for high voltage / leakage resistance as part of Underwriter Laboratory requirements.**

Caution: **Suitable for use on a circuit capable of delivering not more than the RMS symmetrical short circuit amperes listed here at rated voltage.**

Horsepower	RMS Symmetrical Amperes
1–50	5,000
51–200	10,000
201–400	18,000
401–600	30,000
601–900	42,000

Caution: **Do not connect AC power to the Motor terminals T1, T2 and T3. Connecting AC power to these terminals may result in damage to the control.**

Caution: **Baldor recommends not to use "Grounded Leg Delta" transformer power leads that may create ground loops. Instead, we recommend using a four wire Wye.**

Caution: **Do not supply any power to the External Trip (motor thermostat) leads at TH1 and TH2. Power on these leads can damage the control. Use a dry contact type that requires no external power to operate.**

Caution: **If the DB hardware mounting is in any position other than vertical, the DB hardware must be derated by 35% of its rated capacity.**

Caution: **Before external Dynamic Brake Hardware is added, the internal resistor must be disconnected. Remove the resistor from the B+/R1 and R2 terminals. The external resistor can be connected across these terminals. Failure to remove the internal resistor will decrease the total resistance (parallel connection) and cause damage.**

Caution: **Do not set Level 2, Drive Configure, Power Input parameter to Common Bus if AC power is connected to L1, L2 or L3. Common Bus requires numerous changes, contact Baldor for information.**

Caution: **Only Baldor cables should be used to connect the keypad and control. These are special twisted pair cables to protect the control and keypad. Damage associated with other cable types are not covered by the Baldor warranty.**

Caution: **If an M–Contactor is installed, the control must be disabled for at least 200msec before the M–Contactor is opened. If the M–Contactor is opened while the control is supplying voltage and current to the motor, the control may be damaged. Before the control is enabled, the M–Contactor must be closed for at least 200msec.**

Section 3
Receiving & Installation

Receiving & Inspection

When you receive your control, there are several things you should do immediately.

1. Observe the condition of the shipping container and report any damage immediately to the commercial carrier that delivered your control.
2. Remove the control from the shipping container and remove all packing materials from the control. The container and packing materials may be retained for future shipment.
3. Verify that the part number of the control you received is the same as the part number listed on your purchase order.
4. Inspect the control for external physical damage that may have been sustained during shipment and report any damage immediately to the commercial carrier that delivered your control.
5. If the control is to be stored for several weeks before use, be sure that it is stored in a location that conforms to published storage humidity and temperature specifications stated in this manual.

Location and Mounting

The control should be installed in an area that is protected from direct sunlight, corrosives, harmful gases or liquids, dust, metallic particles, and vibration. Exposure to these can reduce the operating life and degrade performance of the control.

Several other factors should be carefully evaluated when selecting a location for installation:

1. To maintain compliance with European Electrical Safety Standard VDE0160(1994)/EN50178 (1998) the control must be mounted inside an enclosure that requires a tool for opening.
2. For effective cooling and maintenance, mount the drive vertically on a solid, flat, non–flammable, vertical surface. See Dimensions in Section 6 of this manual.
3. Be sure to provide proper top, bottom and side clearance (2” minimum each side).
4. Securely fasten the control to the mounting surface at the mounting holes.

   Shock Mounting
   If the control will be subjected to levels of shock greater than 1G or vibration greater than 0.5G at 10 to 60Hz, the control should be shock mounted.
5. **Operating Altitude derating**. Up to 3300 feet (1000 meters) no derating required. Derate the continuous and peak output current by 2% for each 330 feet (100 meters) above 3300 feet. Maximum operating altitude 16,500 feet (5,000 meters).
6. **Operating Temperature derating**. –10°C to 45°C ambient. 45°C maximum, no derating. Derate the continuous and peak output current by 3% for each degree above 45°C to 55°C maximum ambient.

Table 3-1 Watts Loss Ratings

Enclosure Size	240VAC		480VAC		600VAC	
	2.5kHz PWM	8.0kHz PWM	2.5kHz PWM	8.0kHz PWM	2.5kHz PWM	8.0kHz PWM
AA, B and C	50Watts + (14 W/ Amp)	50Watts + (17 W/ Amp)	50Watts + (17 W/ Amp)	50Watts + (26 W/ Amp)	50Watts + (18 W/ Amp)	50Watts + (28 W/ Amp)

Example:

At 2.5kHz, a 3hp, 240VAC control draws 10Amps. Watts loss = 50W + (10x14) = 190Watts

Cover Removal Size AA, B and C

To connect power and signal wires, the cover must be removed. This procedure describes how to access all terminal connections inside the control.

1. Remove the four cover screws shown in Figure 3-1.
2. Lift and remove the cover.
3. Press in the two Cover Releases (Control) and rotate the control cover open as shown.

Figure 3-1 Size AA, B and C Cover Removal

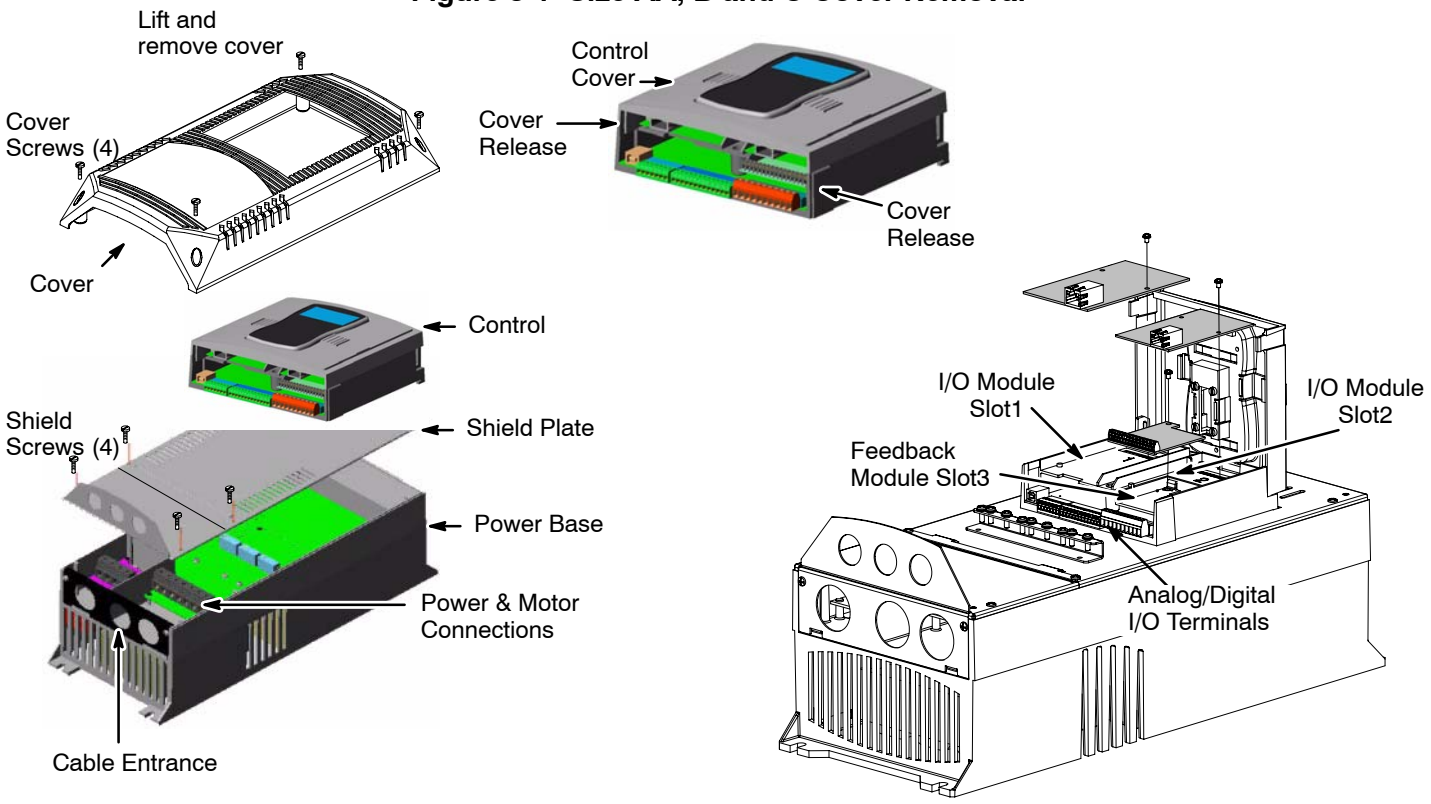

Keypad Connector The keypad connector referenced in Figure 3-2 and Table 3-2 is an RJ−11 type wired as half duplex RS485. Twisted pair wire must be used to connect the keypad and control for remote mounting of the keypad.

Caution: Only Baldor cables should be used to connect the keypad and control. These are special twisted pair cables to protect the control and keypad. Damage associated with other cable types are not covered by the Baldor warranty.

Figure 3-2

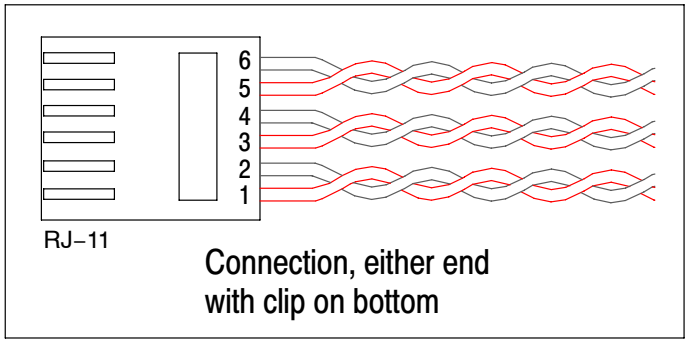

Table 3-2 Cable Connections

Pin	Signal Name	Description
1	A	RS485 Line A
2	B	RS485 Line B
3	KP_PS_GND	Power Supply Return
4	+8V	Power Supply +
5	KP_PS_GND	Power Supply Return
6	+8V	Power Supply +

Optional Remote Keypad Installation

The keypad may be remotely mounted using optional Baldor keypad extension cable (refer to Appendix A). When the keypad is properly mounted to a NEMA Type 4X enclosure, it retains the Type 4X rating. The Mounting/Drill Template is located in Appendix D of this manual.

Caution: Only Baldor cables should be used to connect the keypad and control. These are special twisted pair cables to protect the control and keypad. Damage associated with other cable types are not covered by the Baldor warranty.

Tools Required:

- Center punch, tap handle, screwdrivers (Phillips and straight) and crescent wrench.
- 8-32 tap and #29 drill bit (for tapped mounting holes) or #19 drill (for clearance mounting holes).
- 1-$^{1}/_{4}$″ standard knockout punch (1-$^{11}/_{16}$″ nominal diameter).
- RTV sealant.
- (3) 6–32x3/8” screws
- (3) #6 Flat Washers

Mounting Instructions: For clearance mounting holes

1. Locate a flat 4″ wide x 5.5″ minimum high mounting surface. Material should be sufficient thickness (14 gauge minimum).
2. Place the template on the mounting surface or mark the holes as shown on the template.
3. Accurately center punch the 3 mounting holes and the large knockout.
4. Drill three #27 clearance holes.
5. Locate the 1-$^{3}/_{8}$″ knockout center and punch using the manufacturers instructions.
6. Debur knockout and mounting holes making sure the panel stays clean and flat.
7. Apply RTV to the three #27 clearance holes.
8. Assemble the keypad to the panel. Use 6-32 screws and flat washers.
9. From the inside of the panel, apply RTV over each of the three mounting screws and nuts. Cover a $^{3}/_{4}$″ area around each screw making sure to completely encapsulate the screw head and washer.
10. Refer to Appendix A for selection of cables designed to be used for remote mounting of keypad. Be sure that only Baldor cables are used. Route the keypad cable into the control and connect to P2 of the control board, Figure 3-3.

Figure 3-3 Connector Locations

See recommended tightening torques in Section 6.

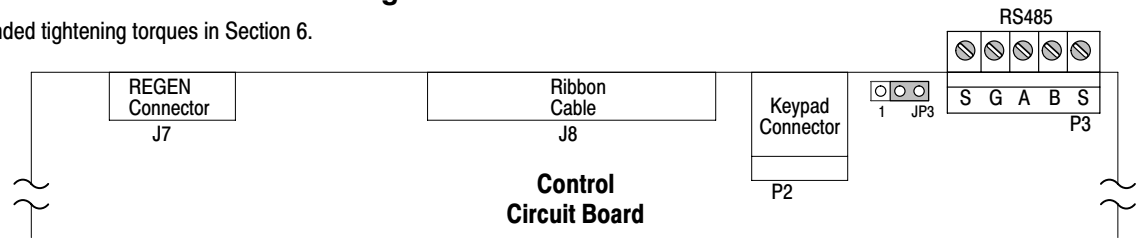

Power Conditioning

System Grounding Baldor recommends not using "Grounded Leg Delta" transformer power leads that may create ground loops. Instead, we recommend using a four wire Wye. Baldor Controls are designed to be powered from standard three phase lines that are electrically symmetrical with respect to ground. System grounding is an important step in the overall installation to prevent problems. The recommended grounding method is shown in Figure 3-4.

Figure 3-4 Recommended System Grounding

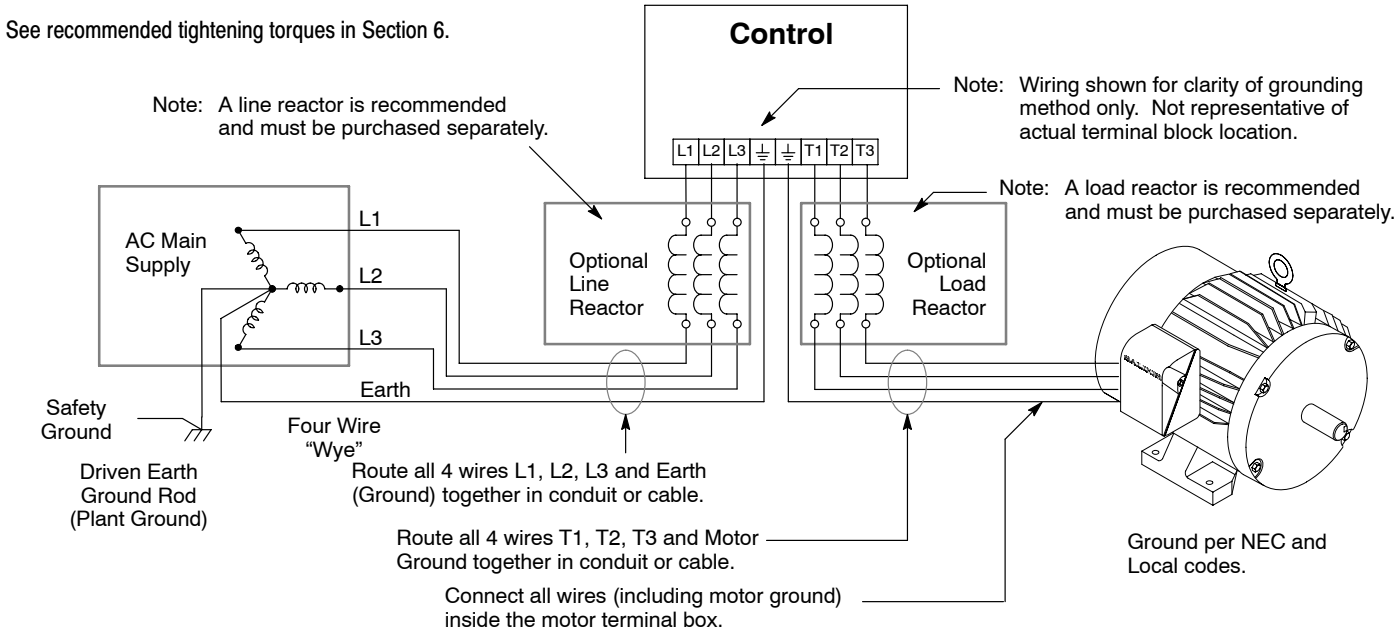

Ungrounded Distribution System

With an ungrounded power distribution system it is possible to have a continuous current path to ground through the MOV devices. To avoid equipment damage, an isolation transformer with a WYE grounded secondary is recommended. This provides three phase AC power that is symmetrical with respect to ground.

Input Power Conditioning

Baldor controls are designed for direct connection to standard three phase lines that are electrically symmetrical with respect to ground. An AC line reactor or an isolation transformer may be required for some power conditions.

- If the feeder or branch circuit that provides power to the control has permanently connected power factor correction capacitors, an input AC line reactor or an isolation transformer must be connected between the power factor correction capacitors and the control.
- If the feeder or branch circuit that provides power to the control has power factor correction capacitors that are switched on line and off line, the capacitors must not be switched while the control is connected to the AC power line. If the capacitors are switched on line while the control is still connected to the AC power line, additional protection is required. TVSS (Transient Voltage Surge Suppressor) of the proper rating must be installed between the AC line reactor or an isolation transformer and the AC input to the control.

Line Impedance The Baldor H2 controls require 1% line impedance minimum. If the impedance of the incoming power does not meet this requirement, a 3 phase line reactor can be used to provide the needed impedance in most cases.

The input impedance of the power lines can be determined as follows:

Measure the line to line voltage at no load and at full rated load.
Use these measured values to calculate impedance as follows:

$$\%\text{Impedance} = \frac{(\text{Volts}_{\text{No Load}} - \text{Volts}_{\text{Full Load}})}{(\text{Volts}_{\text{No Load}})} \times 100$$

Line Reactors Three phase line reactors are available from Baldor. The line reactor to order is based on the full load current of the motor (FLA). If providing your own line reactor, use the following formula to calculate the minimum inductance required.

$$L = \frac{(V_{L-L} \times 0.01)}{(I \times \sqrt{3} \times 377)}$$

Where:	L	Minimum inductance in Henries.
	V_{L-L}	Input volts measured line to line.
	0.01	Desired percentage of input impedance 1%.
	I	Input current rating of control.
	377	Constant used with 60Hz power. Use 314 if input power is 50Hz.

Load Reactors Line reactors may be used at the control output to the motor. When used this way, they are called Load Reactors. Load reactors serve several functions that include:

- Protect the control from a short circuit at the motor.
- Limit the rate of rise of motor surge currents.
- Slowing the rate of change of power the control delivers to the motor.

Load reactors should be installed as close to the control as possible. Selection should be based on the motor nameplate FLA value.

Power Disconnect A power disconnect should be installed between the input power service and the control for a fail safe method to disconnect power. The control will remain in a powered-up condition until all input power is removed from the control and the internal bus voltage is depleted.

Protective Devices Recommended fuse sizes are based on the following:
150% of maximum continuous current for Fast or Very Fast action.

Note: These recommendations do not consider harmonic currents or ambient temperatures greater than 45°C.

Be sure a suitable input power protection device is installed. Use the recommended fuses and wire sizes shown in Table 3-4 is based on the use of copper conductor wire rated at 75 °C. The table is specified for NEMA B motors.

Fast Action Fuses:	240VAC, Buss® KTN 480VAC, Buss® KTS to 600A (KTU for 601 to 1200A) 600VAC, Buss® KTS to 600A (KTU for 601 to 1200A)
Very Fast Action:	240VAC, Buss® JJN 480VAC, Buss® JJS 600VAC, Buss® JJS
Semiconductor Fuses:	240VAC, Ferraz Shawmut A50QS 480VAC, Ferraz Shawmut A70QS 600VAC, Ferraz Shawmut A70QS

Buss® is a trademarks of Cooper Industries, Inc.

Reduced Input Voltage Derating Power ratings are for nominal AC input voltages (240 or 480VAC). The power rating of the control must be reduced when operating at a reduced input voltage. The amount of reduction is the ratio of the voltage change.

Examples:

A 5hp, 240VAC control operating at 208VAC has an effective power rating of 4.5hp.

$$5\text{hp} \times \frac{208\text{VAC}}{240\text{VAC}} = 4.33\text{hp}$$

Likewise, a 3hp, 480VAC control operating at 380VAC has an effective power rating of 2.47hp.

$$3\text{hp} \times \frac{380\text{VAC}}{480\text{VAC}} = 2.37\text{hp}$$

Electrical Installation All interconnection wires between the control, AC power source, motor, host control and any operator interface stations should be in metal conduits or shielded cable must be used. Use listed closed loop connectors that are of appropriate size for wire gauge being used. Connectors are to be installed using crimp tool specified by the manufacturer of the connector. Only class 1 wiring should be used.

Table 3-3 Cable Entrance Hole Sizes

Control Size	Hole Sizes Provided	
	American NPT Size	Metric Size
AA	1/2	(22.8mm) M20, PG16
B	1/2	(22.8mm) M20, PG16
C	1/2 3/4	(22.8mm) M20, PG16 (28.6mm) M25, PG21

Optional Filter/Reactor Figure 3-5 shows the connections for installing an optional Line Filter and AC Reactor.

Figure 3-5 Filter and Reactor Connections

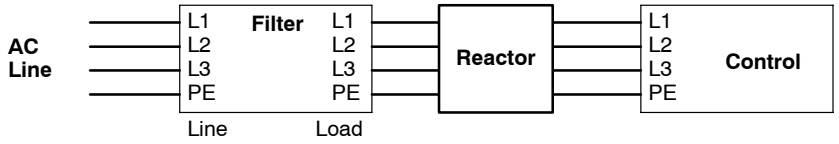

Table 3-4 240VAC Three Phase Wire Size

Control Rating		Input Fuse (Amps)			Wire Gauge	
Input Amps	HP	Fast Acting (UL)	Fast Acting (CUL)	Semiconductor (CUL)	AWG	mm^2
4.2	1	6	6		14	2.5
7.0	2	12	12		14	2.5
10	3	15	15		14	2.5
16	5	25	25		12	4.0
22	7.5	35	35		10	6.0
53	20	80	*80	A50QS80-4	6	16.0
66	25	110	*110	A50QS125-4	4	25.0
78	30	125	*125	A50QS150-4	3	35.0
102	40	175	*175	A50QS150-4	1	50.0

*Requires custom drive for CUL application using fast fuses.

Note: All wire sizes are based on 75°C copper wire. Recommended fuses are based on 45°C ambient, maximum continuous control output current and no harmonic current.

Table 3-5 480VAC Three Phase Wire Size

Control Rating		Input Fuse (Amps)			Wire Gauge	
Input Amps	HP	Fast Acting (UL)	Fast Acting (CUL)	Semiconductor (CUL)	AWG	mm^2
2.1	1	3	3		14	2.5
3.4	2	6	6		14	2.5
4.8	3	8	8		14	2.5
7.6	5	12	12		14	2.5
11	7.5	17.5	17.5		14	2.5
14	10	25	25		12	4.0
21	15	40	40		8	10.0
27	20	50	50		8	10.0
34	25	60	*60		8	10.0
39	30	60	*60	A70QS60-4	8	10.0
51	40	80	*80	A70QS80-4	6	16.0
64	50	100	*100	A70QS100-4	4	25.0

*Requires custom drive for CUL application using fast fuses.

Note: All wire sizes are based on 75°C copper wire. Recommended fuses are based on 45°C ambient, maximum continuous control output current and no harmonic current.

Table 3-6 600VAC Three Phase Wire Size

Control Rating		Input Fuse (Amps)			Wire Gauge	
Input Amps	HP	Fast Acting (UL)	Fast Acting (CUL)	Semiconductor (CUL)	AWG	mm^2
1.7	1	4	4		14	2.5
2.7	2	6	6		14	2.5
3.9	3	10	10		14	2.5
6.1	5	15	15		14	2.5
9.0	7.5	17.5	17.5		14	2.5
11	10	30	30		10	6.0
26.5	25	40	*40	A70QS40-4	10	6.0
30	30	50	*50	A70QS50-4	8	10.0
40	40	70	*70	A70QS70-4	6	16.0
51	50	80	*80	A70QS80-4	6	16.0

*Requires custom drive for CUL application using fast fuses.

Note: All wire sizes are based on 75°C copper wire. Recommended fuses are based on 45°C ambient, maximum continuous control output current and no harmonic current.

3 Phase Power and Motor Connections

Figure 3-6 shows the minimum connections required at the power connector. All cables must be shielded and the shields must be grounded at the cable entrance. The brake resistor and cable must be shielded if installed outside the enclosure.

Figure 3-6 3 Phase Power Connections

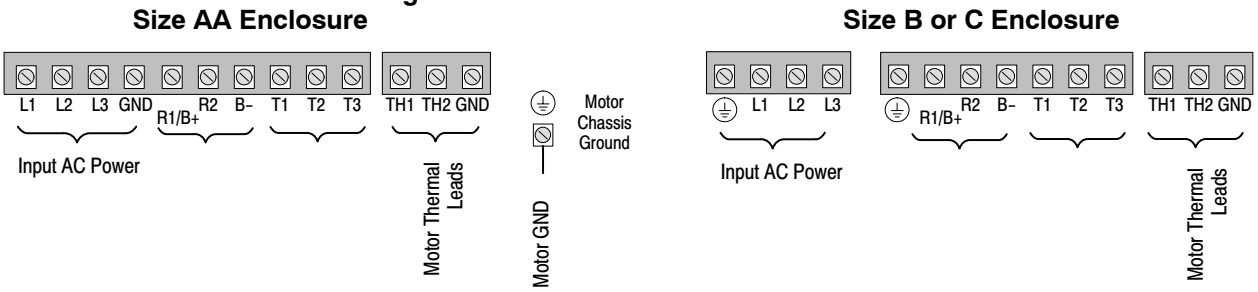

See Recommended Tightening Torques in Section 6.

1. Access the Power and Motor Terminals (see Cover Removal procedure).
2. Feed the power supply and motor cables into the drive through the cable entrance.
3. Connect the line L1, L2, L3 and GND to the power terminal connectors, Figure 3-7.
4. Connect motor leads to T1, T2, T3 and GND motor terminal connectors.

Figure 3-7 3 Phase Power Connections

* Optional components not provided with control, see note 4.

Notes:

1. See “Protective Devices” described previously in this section.
2. Use same gauge wire for Earth ground as is used for L1, L2 and L3.
3. Metal conduit should be used. Connect conduits so the use of a Reactor or RC Device does not interrupt EMI/RFI shielding.
4. See Line/Load Reactors described previously in this section. Line Reactors are built–in for size B and C controls.

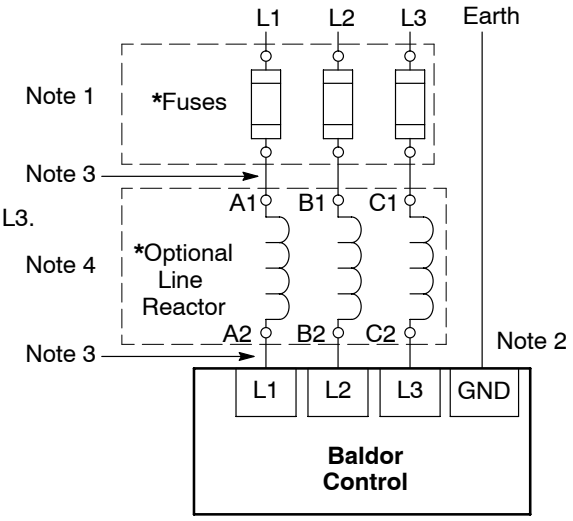

See recommended tightening torques in Section 6.

Operating a Three Phase Control on Single Phase Input Power

Single phase AC input power can be used to power the control instead of three phase for control sizes AA, B and C. The specifications and control sizes are listed in Section 6 of this manual. If single phase power is to be used, the rated Horsepower of the control may have to be reduced (derated). Both connection types are shown in Figure 3-8.

Single phase rating wire size and protection devices are listed in Tables 3-7 and 3-8.

Single Phase Power Derating: Single phase power derating requires that the continuous and peak current ratings of the control be reduced by the following percentages:

1. **1-7.5 hp 240 and 480VAC controls:**
   Derate output hp to the next lower hp value (ie 7.5hp becomes 5hp etc.)
2. **10-50 hp 240 and 480VAC controls:**
   Derate output hp by 50% of the nameplate rating.

Table 3-7 Single Phase Rating Wire Size and Protection Devices - 240 VAC Controls

Control Rating		Input Fuse (Amps)			Wire Gauge	
Input Amps	HP	Fast Acting (UL)	Fast Acting (CUL)	Semiconductor (CUL)	AWG	mm²
8.0	1	12	12		14	2.5
10	2	15	20		14	2.5
15	3	25	25		12	4.0
28	5	45	45		10	6.0
40	7.5					
50	10					
68	15					
88	20	150	*150	A50QS150-4	3	35.0
110	25	175	*175	A50QS175-4	2	35.0
136	30	200	*200	A50QS200-4	1/0	50.0
176	40					
216	50					

*Requires custom drive for CUL application using fast fuses.

Note: All wire sizes are based on 75°C copper wire. Recommended fuses are based on 45°C ambient, maximum continuous control output current and no harmonic current.

Table 3-8 Single Phase Rating Wire Size and Protection Devices - 480 VAC Controls

Control Rating		Input Fuse (Amps)			Wire Gauge	
Input Amps	HP	Fast Acting (UL)	Fast Acting (CUL)	Semiconductor (CUL)	AWG	mm²
4.0	1	6	6		14	2.5
6.0	2	10	10		14	2.5
8.5	3	15	15		14	2.5
14	5	20	20		12	4.0
20	7.5	30	30		10	6.0
25	10	40	40		8	10.0
34	15	50	50		8	10.0
44	20	60	60		8	10.0
55	25	80	*80	A70QS80-4	6	16.0
68	30	100	*100	A70QS100-4	4	25.0
88	40	150	*150	A70QS150-4	3	35.0
108	50					

*Requires custom drive for CUL application using fast fuses.

Note: All wire sizes are based on 75°C copper wire. Recommended fuses are based on 45°C ambient, maximum continuous control output current and no harmonic current.

Figure 3-8 Size AA, B and C Single Phase Power Connections To 3 Phase Control

Single phase 3 wire Connections

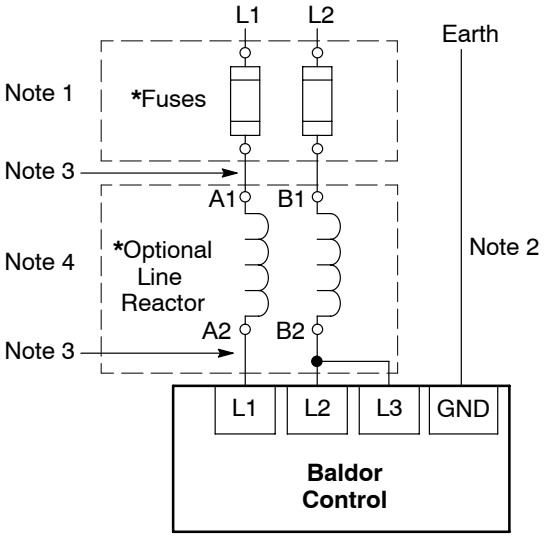

Single phase 2 Wire Connections

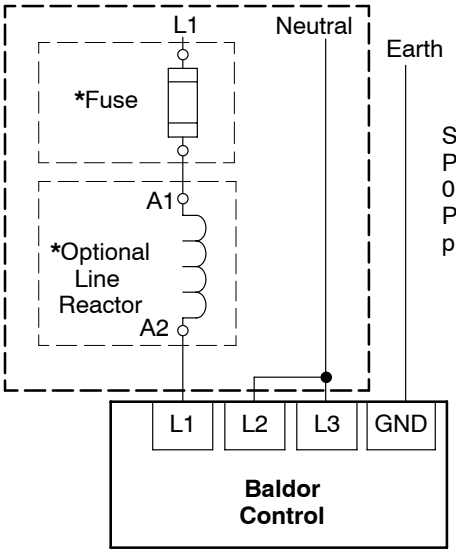

Set Level 2, Drive Configure, Power Input p#2110 to 0–Single to avoid "Loss of Phase" trips during single phase operation.

* Optional components not provided with size AA control.

See Recommended Tightening Torques in Section 6.

Notes:

1. See "Protective Devices" described previously in this section.
2. Use same gauge wire for Earth ground as is used for L1, L2 and L3.
3. Metal conduit should be used. Connect conduits so the use of a Reactor or RC Device does not interrupt EMI/RFI shielding.
4. See Line/Load Reactors described previously in this section. Line Reactors are built–in for size B and C controls.

Single Phase Power and Motor Connections IHH6XX–XX

Figure 3-9 shows the minimum connections required at the power connector. All cables must be shielded and the shields must be grounded at the cable entrance. The brake resistor and cable must be shielded if installed outside the enclosure.

Figure 3-9 Single Phase Control Power Terminals
Size AA Enclosure

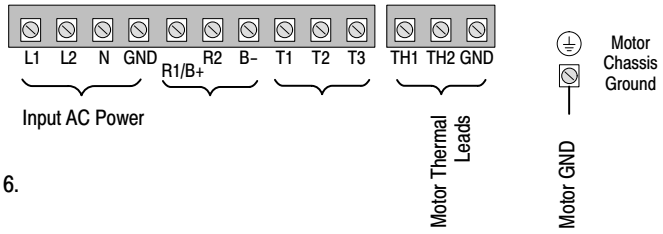

See Recommended Tightening Torques in Section 6.

1. Access the Power and Motor Terminals (see Cover Removal procedure).
2. Feed the power supply and motor cables into the drive through the cable entrance.
3. Connect the line L1, L2, N and GND to the power terminal connectors, Figure 3-9.
4. Connect motor leads to T1, T2, T3 and GND motor terminal connectors.

Figure 3-10 Single Phase Control Power Connections

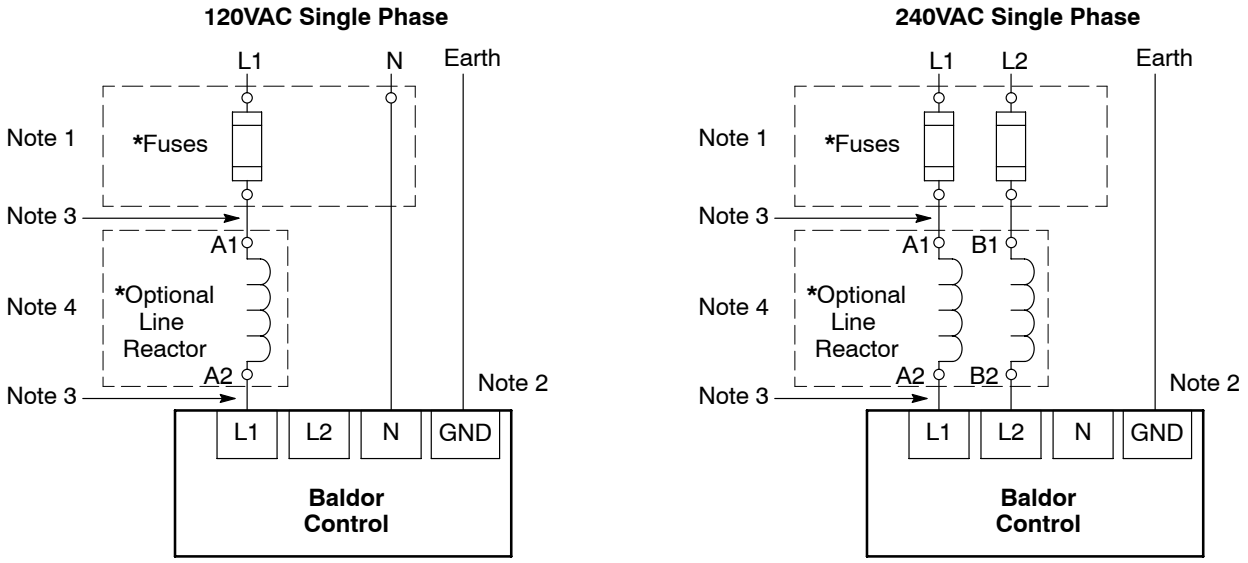

* Optional components not provided with control.

See Recommended Tightening Torques in Section 6.

Notes:

1. See Table 3-9.
2. Use same gauge wire for Earth ground as is used for L1, L2 and N.
3. Metal conduit should be used. Connect conduits so the use of a Reactor or RC Device does not interrupt EMI/RFI shielding.
4. See Line/Load Reactors described previously in this section. Line Reactors are built–in for size B and C controls.

Table 3-9 Single Phase Rating Wire Size and Protection Devices - 240 VAC Controls

HP	120VAC Single Phase Input				240VAC Single Phase Input			
	Input Amps	Input Fuse (Amps) Fast Acting	AWG	mm^2	Input Amps	Input Fuse (Amps) Fast Acting	AWG	mm^2
1	12	20	12	4.0	6.3	12	14	2.5
2	20	30	10	6.0	10.2	20	14	2.5
3	30	35	10	6.0	14.4	25	12	4.0

Note: All wire sizes are based on 75°C copper wire. Recommended fuses are based on 45°C ambient, maximum continuous control output current and no harmonic current.

M−Contactor If required by local codes or for safety reasons, an M-Contactor (motor circuit contactor) may be installed. However, incorrect installation or failure of the M-contactor or wiring may damage the control. If an M-Contactor is installed, the control must be disabled for at least 200msec before the M-Contactor is opened or the control may be damaged. M-Contactor connections are shown in Figure 3-11.

Caution: If an M−Contactor is installed, the control must be disabled for at least 200msec before the M−Contactor is opened. If the M−Contactor is opened while the control is supplying voltage and current to the motor, the control may be damaged. Before the control is enabled, the M−Contactor must be closed for at least 200msec.

Figure 3-11 Motor Connections and Optional Connections

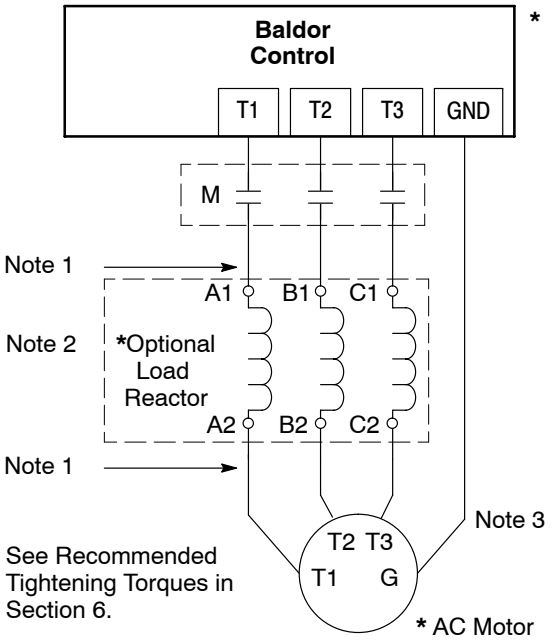

* Optional components not provided with control.

Notes:

1. Metal conduit should be used. Connect conduits so the use of Load Reactor or RC Device does not interrupt EMI/RFI shielding.
2. See Line/Load Reactors described previously in this section.
3. Use same gauge wire for ground as for T1, T2 and T3.

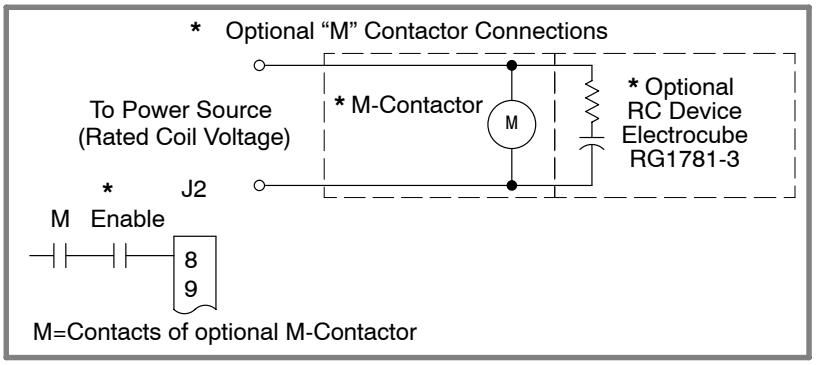

Long Motor Leads

The wire leads that connect the motor to the control are critical in terms of sizing, shielding and the cable characteristics. Short cable runs are usually trouble free but fault−monitoring circuitry can produce numerous faults when long cables (over 100 feet) are used.

100+ ft (30m). Baldor recommends adding an optional load reactor to the output of the control.

250+ ft (75m). Baldor recommends adding an optional load reactor and common mode choke to the control.

The load reactor and/or common mode choke should be placed in close physical proximity to the control. Unexpected faults may occur due to excessive charging current required for motor cable capacitance.

If you use long motor leads and experience unexpected trips due to current overload conditions and are not sure how to correctly size and connect the optional load reactors, please contact your Baldor representative. Baldor is always glad to assist.

Optional Dynamic Brake Hardware

Size AA, B and C controls, refer to Figure 3-12 for DB resistor connections.
Dynamic Brake (DB) Hardware must be installed on a flat, non-flammable, vertical surface for effective cooling and operation.

Caution: Before external Dynamic Brake Hardware is added, the internal resistor must be disconnected. Remove the resistor (wires) from the B+/R1 and R2 terminals. The external resistor can be connected across these terminals. Failure to remove the internal resistor will decrease the total resistance (parallel connection) and cause damage.

Electrical Installation

Connections for DB hardware are determined by the Control model number suffix (E or EO).

Figure 3-12 DB Terminal Identification

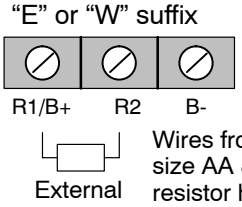

Wires from the Internal Dynamic Brake resistor for size AA & B controls must be removed before external resistor hardware is installed.

C Size Only – Disconnect internal DB resistor wires from DBR1 and DBR2 terminals before connecting external DB Resistor to prevent damage.

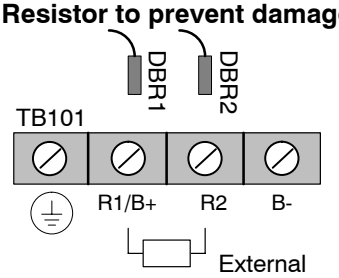

See recommended Terminal Tightening Torques in Section 6.

Note: Although not shown, metal conduit should be used to shield all power wires and motor leads.

External Trip Input

Terminal J2-16 is available for connection to a normally closed contact. The contact should be a dry contact type with no power available from the contact. When the contact opens (activated), the control will automatically shut down and give an External Trip fault.

Control Board Connections

The analog and digital inputs and output terminals are shown in Figure 3-13. The signals are described in Tables 3-10, 3-11 and 3-12. Connections will depend upon which of the operating modes are chosen. Each mode is described and a connection diagram is provided later in this section.

Figure 3-13 Control I/O Connections

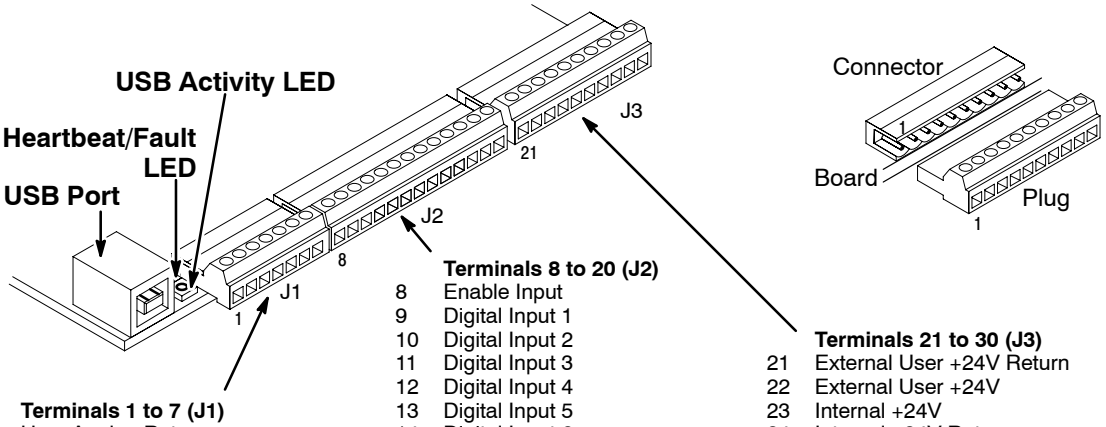

Terminals 1 to 7 (J1)

1	User Analog Return
2	Analog Input 1
3	Analog Ref. Power
4	Analog Input 2 +
5	Analog Input 2 –
6	Analog Output 1
7	Analog Output 2

Terminals 8 to 20 (J2)

8	Enable Input
9	Digital Input 1
10	Digital Input 2
11	Digital Input 3
12	Digital Input 4
13	Digital Input 5
14	Digital Input 6
15	Digital Input 7
16	Digital Input 8
17	Digital Out 1 + (Collector)
18	Digital Out 1 – (Emitter)
19	Digital Out 2 + (Collector)
20	Digital Out 2 – (Emitter)

Terminals 21 to 30 (J3)

21	External User +24V Return
22	External User +24V
23	Internal +24V
24	Internal +24V Return
25	Relay Out 1 NC
26	Relay Out 1 COM
27	Relay Out 1 NO
28	Relay Out 2 NC
29	Relay Out 2 COM
30	Relay Out 2 NO

See recommended tightening torques in Section 6.

Table 3-10 J1 Connector Definition

Connector Terminal	Signal Description
J1–1	0VDC – Common reference for Analog Inputs and outputs.
J1–2	AIN1 – Analog input 1.
J1–3	AREF – Analog reference power (+10V for Potentiometer).
J1–4	AIN2+ – Analog input 2+.
J1–5	AIN2– – Analog input 2–.
J1–6	AOUT1 – Analog output 1 normally the Motor Current Output.
J1–7	AOUT2 – Analog output 2 normally the Speed Feedback Output.

Table 3-11 J2 Connector Definition

J2–8	Enable Input
J2–9	DIN1 – Digital input 1.
J2–10	DIN2 – Digital input 2.
J2–11	DIN3 – Digital input 3.
J2–12	DIN4 – Digital input 4.
J2–13	DIN5 – Digital input 5.
J2–14	DIN6 – Digital input 6.
J2–15	DIN7 – Digital input 7.
J2–16	DIN8 – Digital input 8.
J2–17	Digital Output #1 + (Collector)
J2–18	Digital Output #1 – (Emitter)
J2–19	Digital Output #2 + (Collector)
J2–20	Digital Output #2 – (Emitter)

Table 3-12 J3 Connector Definition

Connector Terminal	Signal Description
J3–21	External User +24V Return
J3–22	External User +24V
J3–23	Internal +24VDC
J3–24	Internal +24VDC Return
J3–25	Relay Output #1 N.C.
J3–26	Relay Output #1 COMMON
J3–27	Relay Output #1 N.O.
J3–28	Relay Output #2 N.C.
J3–29	Relay Output #2 COMMON
J3–30	Relay Output #2 N.O.

Analog Inputs

Two analog inputs are available: analog input #1 (J1-1 and J1-2) and analog input #2 (J1-4 and J1-5) as shown in Figure 3-14. Either analog input may be selected in the Level 1 INPUT block, Command Source parameter.

Figure 3-14 Analog Inputs

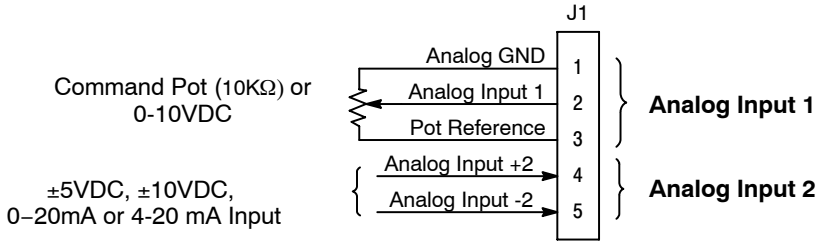

See recommended terminal tightening torques in Section 6.

Analog Input 1 (Single Ended) When using a potentiometer as the speed command, process feedback or setpoint source, the potentiometer should be connected at Analog Input 1. When using Analog Input 1, the respective parameter must be set to “Analogin 1”.

Note: A potentiometer value of 5kΩ to 10kΩ, 0.5 watt may be used.

Parameter Selection

The single ended analog input 1 can be used in one of three ways:

1. Speed or Torque command (Level 1 Input block, Command Source=Analog Input 1).
2. Process Feedback (Level 2 Process Control block, Process Feedback=Analog Input 1).
3. Setpoint Source (Level 2 Process Control block, Setpoint Source=Analog Input 1).

Analog Input 2 (Differential) Analog Input 2 accepts a differential command ±5VDC, ±10VDC, 0-20 mA or 4-20 mA.

If pin J1-4 is positive with respect to pin 5 and P1408=±5V or ±10V, the motor will rotate in the forward direction. If pin J1-4 is negative with respect to pin 5 and P1408=±5V or ±10V, the motor will rotate in the reverse direction. If forward direction is not correct, change Level 2, Motor Data Reverse Rotation parameter P2415.

Analog Input 2 can be connected for single ended operation by connecting either of the differential terminals to common, provided the common mode voltage range is not exceeded.

Analog Input 2 can be set for voltage or current mode operation. With JP1 as shown in Figure 3-15, Voltage mode is selected. If JP1 is connected to pins 2 and 3, current mode is selected.

The Level 1 Input Setup Parameter P#1408 can be set to the full scale voltage or current range desired.

Note: The common mode voltage can be measured with a voltmeter. Apply the maximum command voltage to analog input 2 (J1-4, 5). Measure the AC and DC voltage across J1-1 to J1-4. Add the AC and DC readings together. Measure the AC and DC voltage from J1-1 to J1-5. Add the AC and DC readings together.

If either of these measurement totals exceeds a total of ±15 volts, then the common mode voltage range has been exceeded. To correct this condition, isolate the command signal with a signal isolator.

Analog Outputs Two programmable analog outputs are provided on J1–6 and J1-7. These outputs are scaled and can be used to provide status of various control conditions. The return for these outputs is J1-1 analog return. Each output function is programmed in the Level 1 Output block, Analog Out1 Signal or Analog Out2 Signal parameter values.

Analog Output 1 can be set for voltage or current mode operation. With JP2 as shown in Figure 3-15, Voltage mode is selected. If JP2 is connected to pins 2 and 3, current mode is selected.

The Level 1 Output Setup Parameter P#1510 can be set to the full scale voltage or current range desired.

Figure 3-15 Jumper Locations

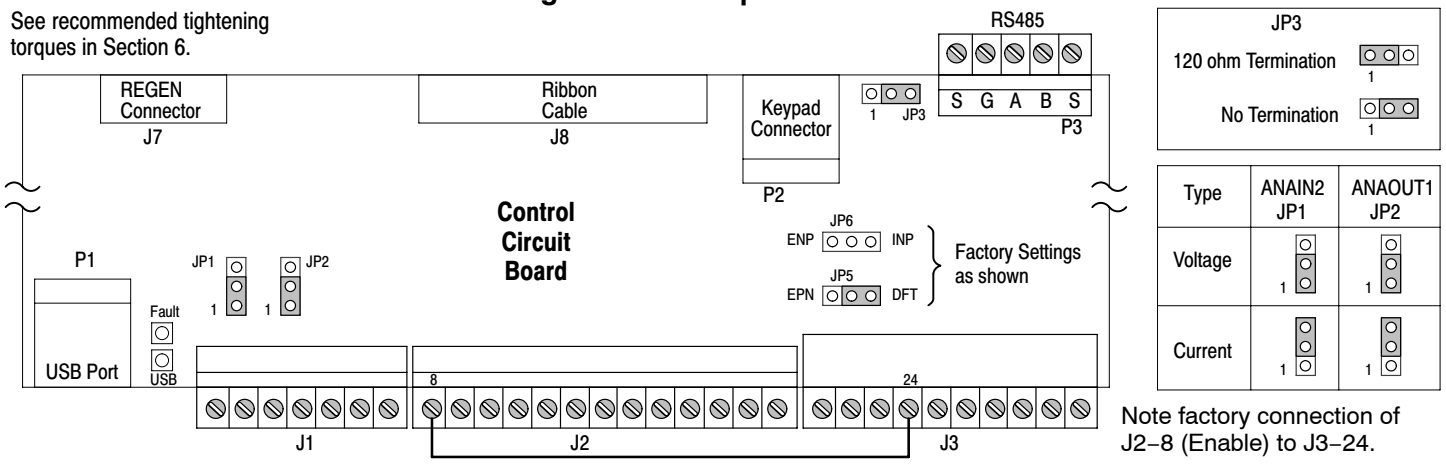

Note factory connection of J2–8 (Enable) to J3–24.

Opto Isolated Inputs Logic input connections are made at terminal strip J2 pins 8 to 16. J2 inputs can be wired as active High or active Low as shown in Figure 3-16.

Internal or external power sources are selected using jumpers JP5 and JP6 shown in Figure 3-15.

Figure 3-16 Active HIGH (Sourcing); Active LOW (Sinking) Connections

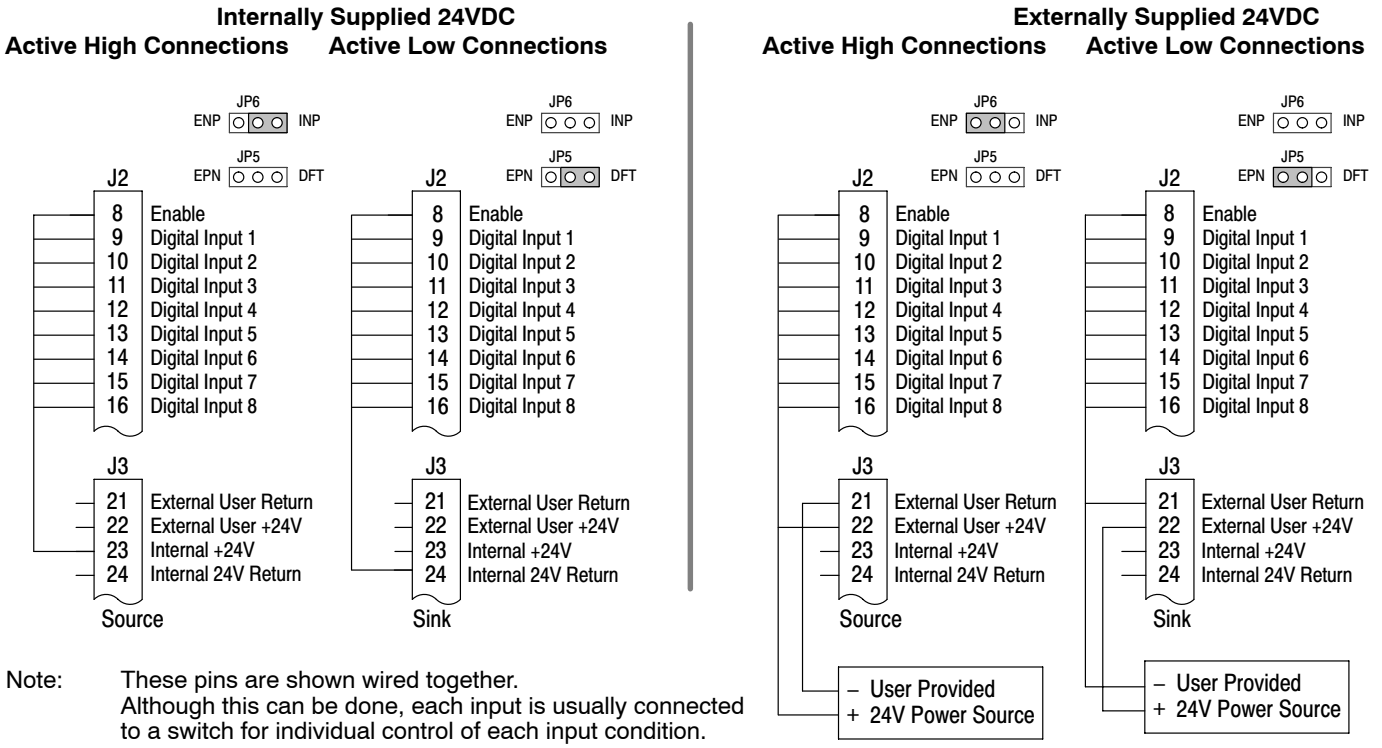

Note: These pins are shown wired together.
Although this can be done, each input is usually connected to a switch for individual control of each input condition.

See recommended tightening torques in Section 6.

Note: Factory connection of J2–8 (Enable) is made to J3–24 for Internal, Active Low connection. For other configurations, the wire at J3–24 must be moved to J3–23, J3–21 or J3–22 as needed.

Operating Modes

The following operating modes are available. These modes define the basic motor control setup and the operation of the input and output terminals. After the circuit connections are completed, the operating mode is selected by programming the Operating Mode parameter in the Level 1 Input Programming Block.

Operating modes include:

- Keypad
- Standard Run, 2Wire
- Standard Run, 3Wire
- 15 Preset Speeds
- Fan Pump 2Wire
- Fan Pump 3Wire
- Process Control
- 3 SPD ANA 2Wire
- 3 SPD ANA 3Wire
- Electronic Pot 2Wire
- Electronic Pot 3Wire
- Network
- Profile Run
- Bipolar
- PLC

Each mode requires connections to the J1, J2 and J3 terminal strips. The terminal strips are shown in Figure 3-13. The connection of each input or output signal is described in the following pages.

Keypad

The Keypad mode allows the control to be operated from the keypad. In this mode, only the Enable wiring is required. However, the Stop and External Trip inputs may optionally be used. All other Digital inputs remain inactive. The Analog outputs and Digital outputs remain active at all times.

Figure 3-17 Keypad Connection Diagram

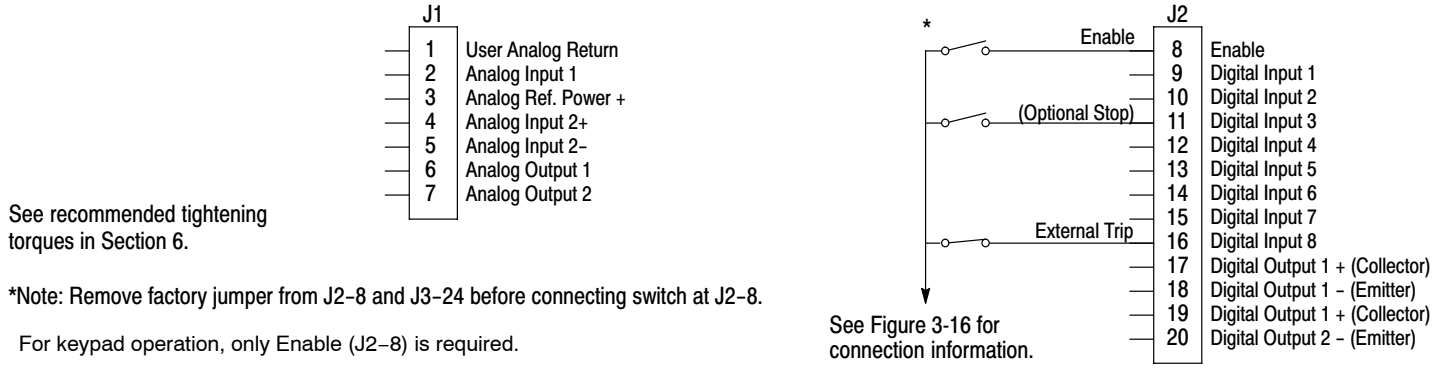

J2-8 CLOSED allows normal control operation. OPEN disables the control and motor coasts to a stop.

J2-11 Optional STOP input (not required). OPEN motor coasts or brakes to a stop if Level 1 Keypad block, Local Hot Start parameter is set to “ON”. Motor will restart when switch closes after open.
CLOSED allows normal control operation.

J2-16 Optional External Trip input (not required). If used, you must set Level 2 Drive Protect block, External Trip to “ON”.
CLOSED allows normal operation.
OPEN causes an External Trip to be received by the control (when programmed to “ON”).

Standard Run 2Wire

In Standard Run 2Wire mode, the control is operated by the digital inputs and the command source. Also, Preset Speed 1 can be selected. The opto inputs can be switches as shown in Figure 3-18 or logic signals from another device.

Figure 3-18 Standard Run 2Wire Connection Diagram

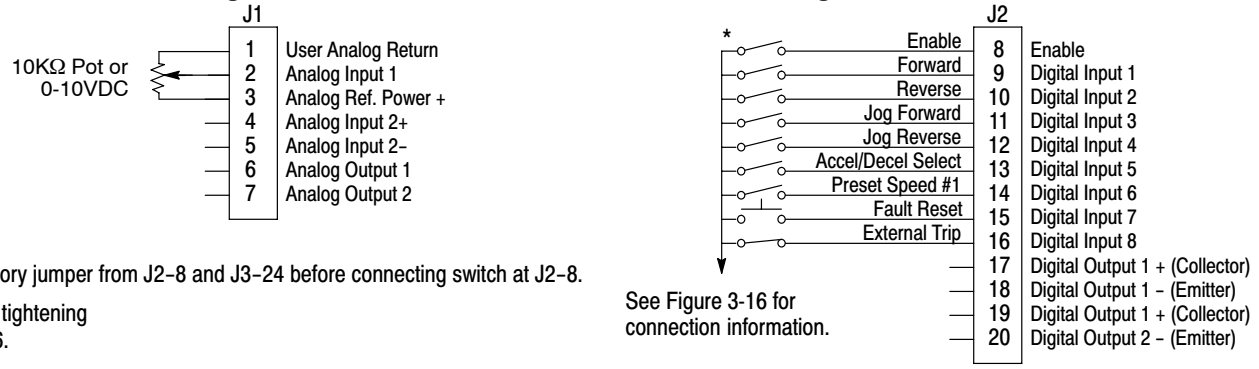

J2–8 CLOSED allows normal operation.
OPEN disables the control and motor coasts to a stop.

J2–9 CLOSED starts motor operation in the Forward direction.
OPEN motor decels to stop.

J2–10 CLOSED starts motor operation in the Reverse direction.
OPEN motor decels to stop.

J2–11 CLOSED starts motor JOG operation in the Forward direction.
OPEN motor decels to stop.

J2–12 CLOSED starts motor JOG operation in the Reverse direction.
OPEN motor decels to stop.

J2–13 CLOSED selects ACC / DEC / S-ACC / S-DEC group 2.
OPEN selects ACC / DEC / S-ACC / S-DEC group 1.

J2–14 CLOSED selects Preset Speed #1, (J2–11 or 12, will override this Preset Speed).
OPEN allows speed command from the command source.

J2–15 CLOSED to reset fault.
OPEN to run.

J2–16 Optional External Trip input (not required). If used, you must set Level 2 Drive Protect block, External Trip to “ON”.
CLOSED allows normal operation.
OPEN causes an External Trip to be received by the control (when programmed to “ON”).

Note: When command source is a unipolar signal (0–10V, 0–5V, 4–20ma etc.) and forward or reverse are closed, motion will occur (unless both are closed at the same time and motion stops).

Standard Run 3Wire

In Standard Run 3Wire mode, the control is operated by the digital inputs and the command source. Also, Preset Speed 1 can be selected. The opto inputs can be switches as shown in Figure 3-19 or logic signals from another device.

Figure 3-19 Standard Run 3Wire Connection Diagram

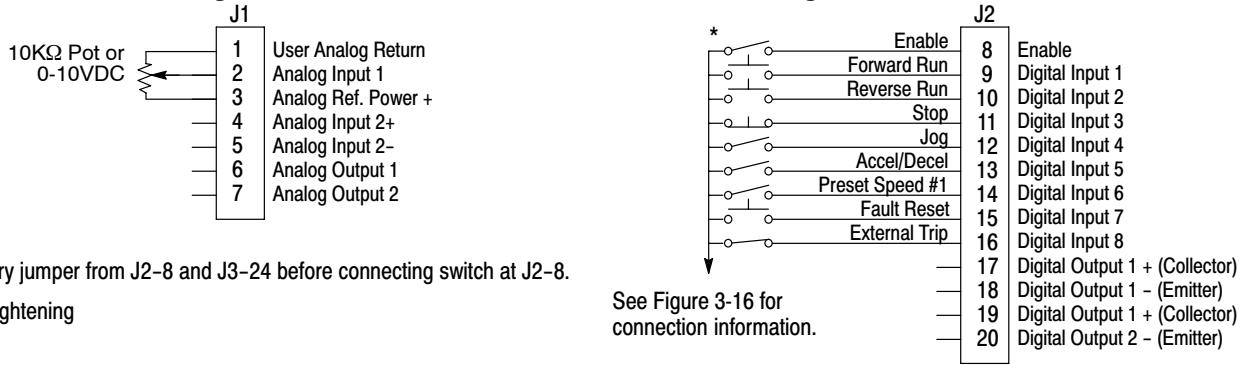

J2–8 CLOSED allows normal operation.
OPEN disables the control and motor coasts to a stop.

J2–9 MOMENTARY CLOSED starts motor operation in the Forward direction.
In JOG mode (J2–12 CLOSED), continuous closed jogs motor in the Forward direction.

J2–10 MOMENTARY CLOSED starts motor operation in the Reverse direction.
In JOG mode (J2–12 CLOSED), continuous closed jogs motor in the Reverse direction.

J2–11 MOMENTARY OPEN motor decels to stop (depending on Decel time).

J2–12 CLOSED places control in JOG mode, Forward and Reverse run are used to jog the motor.

J2–13 CLOSED selects ACC / DEC / S-ACC / S-DEC group 2.
OPEN selects ACC / DEC / S-ACC / S-DEC group 1.

J2–14 CLOSED selects Preset Speed #1, (J2–12, will override this Preset Speed).
OPEN allows speed command from the command source.

J2–15 CLOSED to reset fault.
OPEN to run.

J2–16 Optional External Trip input (not required). If used, you must set Level 2 Drive Protect block, External Trip to “ON”.
CLOSED allows normal operation.
OPEN causes an External Trip to be received by the control (when programmed to “ON”).

Note: When command source is a unipolar signal (0–10V, 0–5V, 4–20ma etc.) and forward or reverse are closed, motion will occur (unless both are closed at the same time and motion stops).

15 Preset Speeds

Operation in 15 Preset Speeds 2-Wire mode is controlled by the opto isolated inputs at J2. The values of the Preset Speeds are set in the Level 1 Preset Speeds block, Preset Speed 1 to Preset Speed 15. J2−11 through J2−14 inputs allow selection of 15 preset speeds. The opto inputs can be switches as shown in Figure 3-20 or logic signals from another device.

Figure 3-20 15 Speed 2Wire Connection Diagram

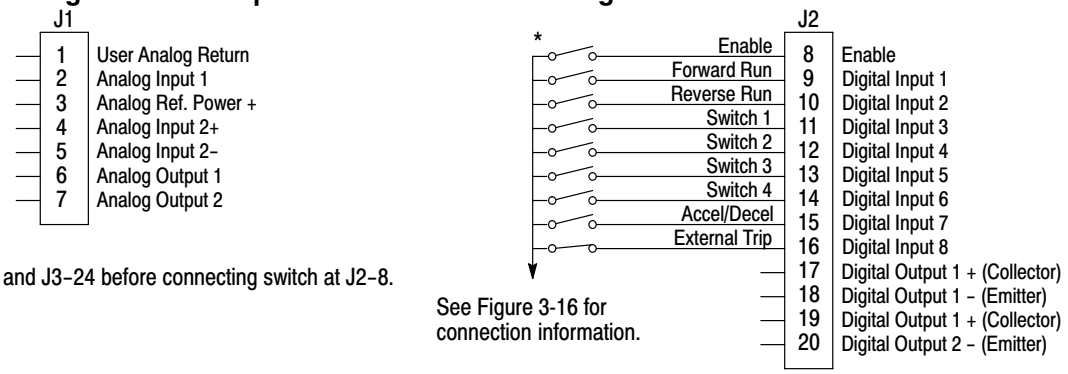

*Note: Remove factory jumper from J2-8 and J3-24 before connecting switch at J2-8.

See recommended tightening torques in Section 6.

J2−8 CLOSED allows normal operation.
OPEN disables the control and motor coasts to a stop.

J2−9 CLOSED operates the motor in the Forward direction (with J2−10 open).
OPEN motor decels to stop (depending on Decel time).

J2−10 CLOSED operates motor in the Reverse direction (with J2−9 open).
OPEN motor decels to stop (depending on Decel time).

J2−11−14 Selects programmed Preset Speeds as defined in Table 3-13.

J2−15 CLOSED selects ACC / DEC / S-ACC / S-DEC group 2.
OPEN selects ACC / DEC / S-ACC / S-DEC group 1.

J2−16 Optional External Trip input (not required). If used, you must set Level 2 Drive Protect block, External Trip to “ON”.
CLOSED allows normal operation.
OPEN causes an External Trip to be received by the control (when programmed to “ON”).

Table 3-13 Switch Truth Table for 15 Speed, 2Wire Control Mode

J2−11	J2−12	J2−13	J2−14	Function
Open	Open	Open	Open	Selects Level 1:Preset Speed:Preset Speed 1 (P#1001)
Closed	Open	Open	Open	Selects Level 1:Preset Speed:Preset Speed 2 (P#1002)
Open	Closed	Open	Open	Selects Level 1:Preset Speed:Preset Speed 3 (P#1003)
Closed	Closed	Open	Open	Selects Level 1:Preset Speed:Preset Speed 4 (P#1004)
Open	Open	Closed	Open	Selects Level 1:Preset Speed:Preset Speed 5 (P#1005)
Closed	Open	Closed	Open	Selects Level 1:Preset Speed:Preset Speed 6 (P#1006)
Open	Closed	Closed	Open	Selects Level 1:Preset Speed:Preset Speed 7 (P#1007)
Closed	Closed	Closed	Open	Selects Level 1:Preset Speed:Preset Speed 8 (P#1008)
Open	Open	Open	Closed	Selects Level 1:Preset Speed:Preset Speed 9 (P#1009)
Closed	Open	Open	Closed	Selects Level 1:Preset Speed:Preset Speed 10 (P#1010)
Open	Closed	Open	Closed	Selects Level 1:Preset Speed:Preset Speed 11 (P#1011)
Closed	Closed	Open	Closed	Selects Level 1:Preset Speed:Preset Speed 12 (P#1012)
Open	Open	Closed	Closed	Selects Level 1:Preset Speed:Preset Speed 13 (P#1013)
Closed	Open	Closed	Closed	Selects Level 1:Preset Speed:Preset Speed 14 (P#1014)
Open	Closed	Closed	Closed	Selects Level 1:Preset Speed:Preset Speed 15 (P#1015)
Closed	Closed	Closed	Closed	Fault Reset

Fan Pump 2Wire

Operation in the Fan Pump 2-Wire mode is controlled by the opto isolated inputs at J2–8 through J2–16. The opto inputs can be switches as shown in Figure 3-21 or logic signals from another device.

Figure 3-21 Fan Pump 2Wire Connection Diagram

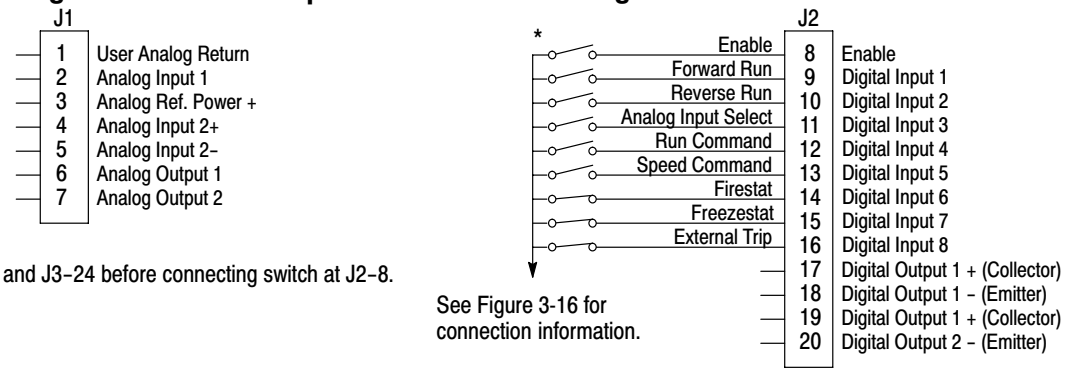

*Note: Remove factory jumper from J2–8 and J3–24 before connecting switch at J2–8.

See recommended tightening torques in Section 6.

J2–8 CLOSED allows normal control operation.
OPEN disables the control and the motor coasts to a stop.

J2–9 CLOSED operates the motor in the Forward direction (with J2–10 open).
OPEN motor decels to stop (depending on Decel Time).

Note: J2–9 and J2–10 are both closed = Fault Reset.

J2–10 CLOSED operates the motor in the Reverse direction (with J2–9 open).
OPEN motor decels to stop (depending on Decel Time).

Note: J2–9 and J2–10 are both closed = Fault Reset.

J2–11 CLOSED selects Analog Input 1 (if J2–13, J2–14 and J2–15 are closed).
OPEN selects Command Source (Level 1, Input, Command Source, if J2–13, J2–14 and J2–15 are closed).

J2–12 CLOSED selects STOP/START and Reset commands from terminal strip.
OPEN selects STOP/START and Reset commands from Keypad.

J2–13 CLOSED allows other selections, see Speed Select Table 3-14.
OPEN selects speed commanded from Keypad (if J2–14 and J2–15 are closed).

Note: When changing from Terminal Strip to Keypad (J2–12 or J2–13) the motor speed and direction will remain the same after the change.

J2–14 Firestat. Selects Level 1, Preset Speeds, Preset Speed #1.

J2–15 Freezestat. Level 1, Preset Speeds, Preset Speed #2 (if J2–14 is closed).

J2–16 Optional External Trip input (not required). If used, you must set Level 2 Drive Protect block, External Trip to “ON”.
CLOSED allows normal operation.
OPEN causes an External Trip to be received by the control (when programmed to “ON”).

Note: When command source is a unipolar signal (0–10V, 0–5V, 4–20ma etc.) and forward or reverse are closed, motion will occur (unless both are closed at the same time and motion stops).

Table 3-14 Speed Select Table – Fan Pump, 2Wire

J2–11	J2–13	J2–14	J2–15	Command
	Open	Closed	Closed	Keypad Speed Command
		Open		Level 1, Preset Speeds, Preset Speed #1
		Closed	Open	Level 1, Preset Speeds, Preset Speed #2
Open	Closed	Closed	Closed	Level 1, Input Setup, Command Source (parameter 1402)
Closed	Closed	Closed	Closed	Analog Input 1

Fan Pump 3Wire

Operation in the Fan Pump 3-Wire mode is controlled by the opto isolated inputs at J2–8 through J2–16. The opto inputs can be switches as shown in Figure 3-22 or logic signals from another device.

Figure 3-22 Fan Pump 3Wire Connection Diagram

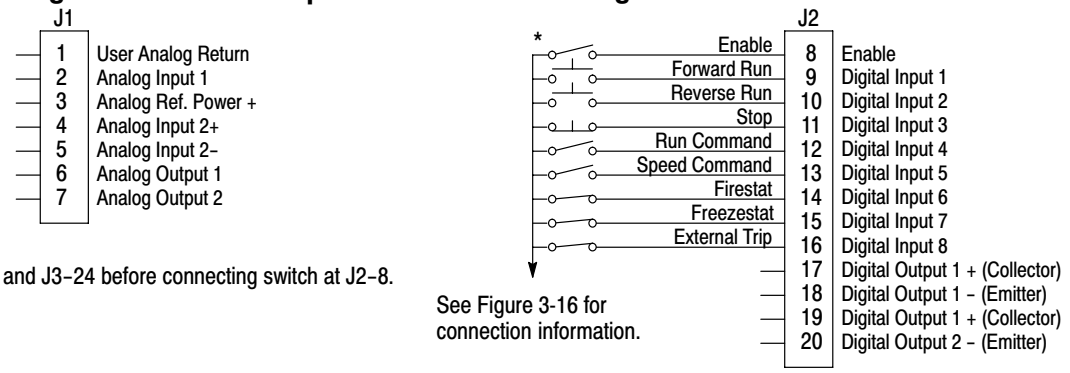

J2–8 CLOSED allows normal control operation.
OPEN disables the control and the motor coasts to a stop.

J2–9 MOMENTARY CLOSED starts motor operation in the Forward direction.

Note: Closing both J2–9 and J2–10 at the same time will reset a fault.

J2–10 MOMENTARY CLOSED starts motor operation in the Reverse direction.

Note: Closing both J2–9 and J2–10 at the same time will reset a fault.

J2–11 MOMENTARY OPEN motor decels to stop (depending on Decel Time).

J2–12 CLOSED selects STOP/START and Reset commands from terminal strip.
OPEN selects STOP/START and Reset commands from Keypad.

J2–13 CLOSED allows other selections, see Speed Select Table 3-15.
OPEN selects speed commanded from Keypad (if J2–14 and J2–15 are closed).

Note: When changing from Terminal Strip to Keypad (J2–12 or J2–13) the motor speed and direction will remain the same after the change.

J2–14 Firestat. Selects Level 1, Preset Speeds, Preset Speed #1.

J2–15 Freezestat. Selects Level 1, Preset Speeds, Preset Speed #2 (if J2–14 is closed).

J2–16 Optional External Trip input (not required). If used, you must set Level 2 Drive Protect block, External Trip to “ON”.
CLOSED allows normal operation.
OPEN causes an External Trip to be received by the control (when programmed to “ON”).

Table 3-15 Speed Select Table – Fan Pump, 3Wire

J2–13	J2–14	J2–15	Command
	Open		Level 1, Preset Speeds, Preset Speed #1
	Closed	Open	Level 1, Preset Speeds, Preset Speed #2
Open	Closed	Closed	Keypad Speed Command
Closed	Closed	Closed	Level 1, Input Setup, Command Source (parameter 1402)

Process Control The process control mode provides an auxiliary closed loop general purpose PID set point control. The process control loop may be configured in various ways and detailed descriptions of the Process Control are given in MN707 “Introduction to Process Control”. The opto inputs can be switches as shown in Figure 3-23 or logic signals from another device.

Figure 3-23 Process Control Connection Diagram

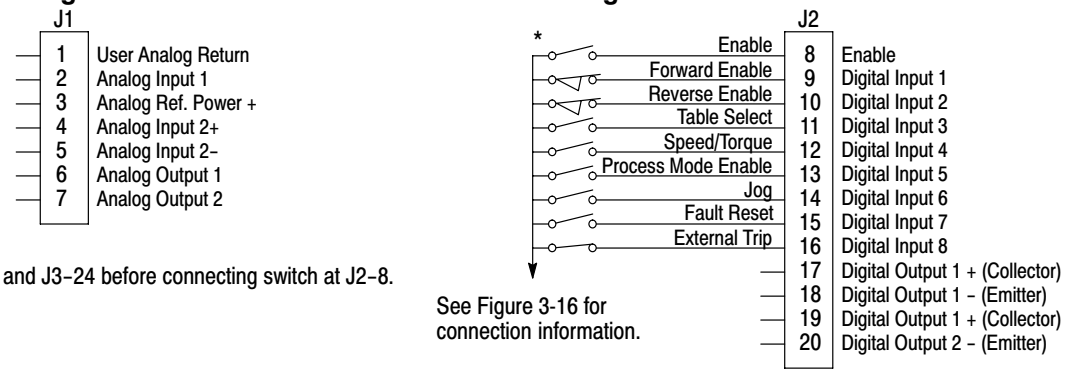

*Note: Remove factory jumper from J2–8 and J3–24 before connecting switch at J2–8.

See recommended tightening torques in Section 6.

See Figure 3-16 for connection information.

J2–8 CLOSED allows normal control operation.
OPEN disables the control and the motor coasts to a stop.

J2–9 CLOSED to enable operation in the Forward direction.
OPEN TO DISABLE Forward operation (drive will decel to a stop if a Forward command is still present).
Reverse operation is still possible if J2–10 is closed.

J2–10 CLOSED to enable operation in the Reverse direction.
OPEN to disable Reverse operation (drive will decel to a stop if a Reverse command is still present).
Forward operation is still possible if J2–9 is closed.

Note: If J2–9 and J2–10 are both opened, the drive will decel to a stop.

J2–11 CLOSED = TABLE 2, OPEN = TABLE 1. Refer to Table 3-16.

J2–12 CLOSED Selects ACC/DEC group 2 (V/F) or selects torque mode (Open Vector)
OPEN Selects ACC/DEC group 1 (V/F) or selects speed mode (Open Vector)

Note: If a stop command is issued while in the torque (current) mode, the control will stop but will not maintain position (zero current). This is different than zero speed operation for the velocity mode.

J2–13 CLOSED to enable PID and FF. Feedforward (FF) is from P1402 (Command Source).
OPEN to enable FF only. PID is disabled with its integrator reset to zero.

J2–14 CLOSED to enable JOG mode. Jog in either direction is allowed if enabled by J2–9 or J2–10.

J2–15 CLOSED to reset a fault.
OPEN to run.

J2–16 Optional External Trip input (not required). If used, you must set Level 2 Drive Protect block, External Trip to “ON”.
CLOSED allows normal operation.
OPEN causes an External Trip to be received by the control (when programmed to “ON”).

Table 3-16 Table Select – Process Control

J2–11	Command
Open	Selects Parameter Table 1
Closed	Selects Parameter Table 2

Note: See Multiple Parameter Sets in this section.

3 Speed Analog 2Wire

Provides 2 wire input control and allows selection of 3 Preset Speeds. The values of the preset speeds are set in the Level 1 Preset Speeds block, Preset Speed #1, Preset Speed #2 and Preset Speed #3. The opto inputs can be switches as shown in Figure 3-24 or logic signals from another device.

Figure 3-24 3 Speed Analog 2Wire Connection Diagram

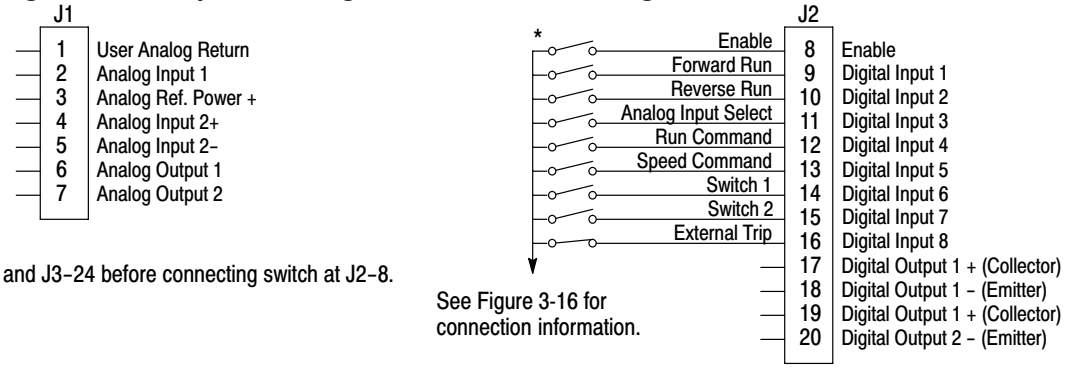

*Note: Remove factory jumper from J2–8 and J3–24 before connecting switch at J2–8.

See recommended tightening torques in Section 6.

J2–8 CLOSED allows normal control operation.
OPEN disables the control and the motor coasts to a stop.

J2–9 CLOSED operates the motor in the Forward direction (with J2–10 open).
OPEN motor decels to stop (depending on Decel time).

J2–10 CLOSED operates the motor in the Reverse direction (with J2–9 open).
OPEN motor decels to stop (depending on Decel time).

Note: Closing both J2–9 and J2–10 at the same time will reset a fault.

J2–11 CLOSED selects Analog Input 1.
OPEN selects Level 1 Input block, Command Source parameter.

Note: If Command Source (Level 1 Input block) is set to Analog Input 1, then Analog Input 1 is always selected regardless of this switch position.

J2–12 CLOSED selects STOP/START and Reset commands from terminal strip.
OPEN selects STOP/START and Reset commands from Keypad.

J2–13 CLOSED selects Level 1 Input block, Command Source parameter.
OPEN selects speed commanded from Keypad.

Note: When changing from Terminal Strip to Keypad (J2–12 or J2–13) the motor speed and direction will remain the same after the change.

J2–14 Selects Preset Speeds as defined in the Speed Select Table (Table 3-17).

J2–15 Selects Preset Speeds as defined in the Speed Select Table (Table 3-17).

J2–16 Optional External Trip input (not required). If used, you must set Level 2 Drive Protect block, External Trip to “ON”.
CLOSED allows normal operation.
OPEN causes an External Trip to be received by the control (when programmed to “ON”).

Note: When command source is a unipolar signal (0–10V, 0–5V, 4–20ma etc.) and forward or reverse are closed, motion will occur (unless both are closed at the same time and motion stops).

Table 3-17 Speed Select Table

J2–14	J2–15	Command
OPEN	OPEN	Level 1, Input Setup, Command Source (parameter 1402)
CLOSED	OPEN	Preset #1
OPEN	CLOSED	Preset #2
CLOSED	CLOSED	Preset #3

3 Speed Analog 3Wire

Provides 3 wire input control and allows selection of 3 Preset Speeds. The values of the preset speeds are set in the Level 1 Preset Speeds block, Preset Speed #1, Preset Speed #2 and Preset Speed #3. The opto inputs can be switches as shown in Figure 3-25 or logic signals from another device.

Figure 3-25 3 Speed Analog 3Wire Connection Diagram

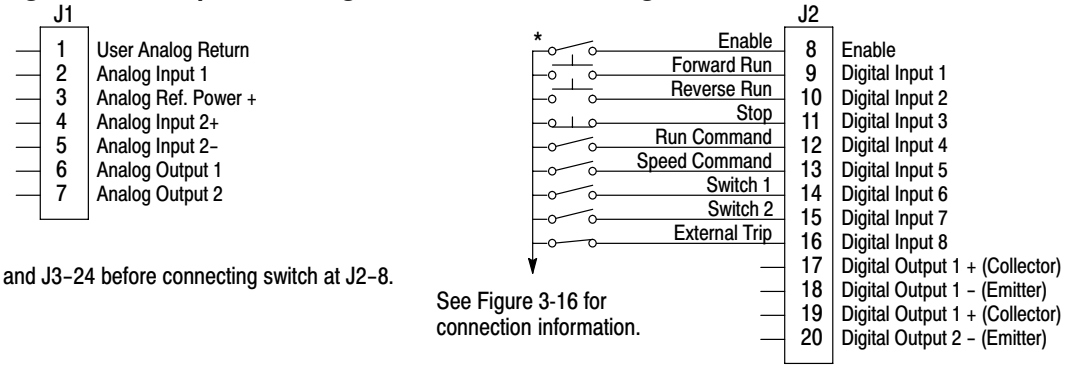

*Note: Remove factory jumper from J2–8 and J3–24 before connecting switch at J2–8.

See recommended tightening torques in Section 6.

See Figure 3-16 for connection information.

J2–8 CLOSED allows normal control operation.
OPEN disables the control and the motor coasts to a stop.

J2–9 MOMENTARY CLOSED starts motor operation in the Forward direction.

J2–10 MOMENTARY CLOSED starts motor operation in the Reverse direction.

Note: Closing both J2–9 and J2–10 at the same time will reset a fault.

J2–11 MOMENTARY OPEN motor decels to stop (depending on Decel time).

J2–12 CLOSED selects STOP/START and Reset commands from terminal strip.
OPEN selects STOP/START and Reset commands from Keypad.

J2–13 CLOSED selects Level 1 Input block, Command Source parameter.
OPEN selects speed commanded from Keypad.

Note: When changing from Terminal Strip to Keypad (J2–12 or J2–13) the motor speed and direction will remain the same after the change.

J2–14 Selects Preset Speeds as defined in the Speed Select Table (Table 3-18).

J2–15 Selects Preset Speeds as defined in the Speed Select Table (Table 3-18).

J2–16 Optional External Trip input (not required). If used, you must set Level 2 Drive Protect block, External Trip to “ON”.
CLOSED allows normal operation.
OPEN causes an External Trip to be received by the control (when programmed to “ON”).

Table 3-18 Speed Select Table

J2–14	J2–15	Command
OPEN	OPEN	Level 1, Input Setup, Command Source (parameter 1402)
CLOSED	OPEN	Preset #1
OPEN	CLOSED	Preset #2
CLOSED	CLOSED	Preset #3

E−POT 2Wire

Provides speed Increase and Decrease inputs to allow E−POT (Electronic Potentiometer) operation with 2 wire inputs. The values of the preset speeds are set in the Level 1 Preset Speeds block, Preset Speed #1 or Preset Speed #2. The opto inputs can be switches as shown in Figure 3-26 or logic signals from another device.

Figure 3-26 E−POT 2Wire Connection Diagram

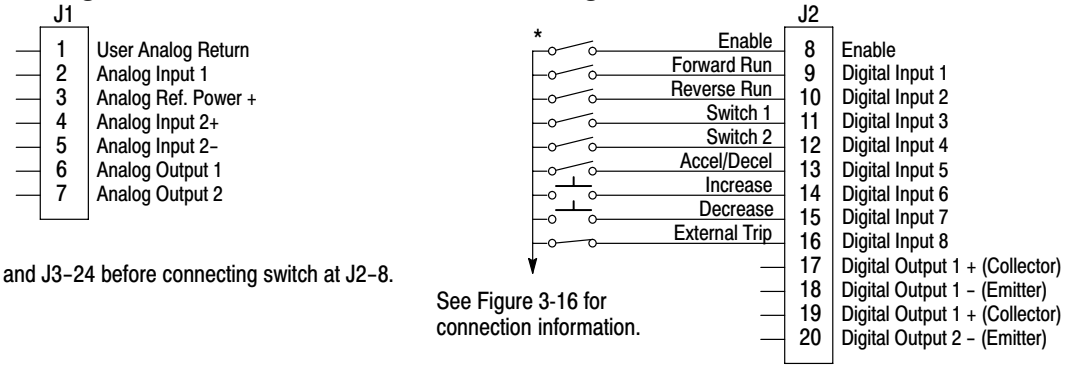

J2−8 CLOSED allows normal control operation.
OPEN disables the control and the motor coasts to a stop.

J2−9 CLOSED starts motor operation in the Forward direction.
OPEN motor decels to stop (depending on Decel time).

J2−10 CLOSED starts motor operation in the Reverse direction.
OPEN motor decels to stop (depending on Decel time).

Note: Closing both J2−9 and J2−10 at the same time will reset a fault.

J2−11 Selects Preset Speeds as defined in the Speed Select Table (Table 3-19).

J2−12 Selects Preset Speeds as defined in the Speed Select Table (Table 3-19).

J2−13 CLOSED selects ACC / DEC / S-ACC / S-DEC group 2.
OPEN selects ACC / DEC / S-ACC / S-DEC group 1.

J2−14 MOMENTARY CLOSED increases motor speed while contact is closed.

J2−15 MOMENTARY CLOSED decreases motor speed while contact is closed.

J2−16 Optional External Trip input (not required). If used, you must set Level 2 Drive Protect block, External Trip to “ON”.
CLOSED allows normal operation.
OPEN causes an External Trip to be received by the control (when programmed to “ON”).

Table 3-19 Speed Select Table

J2−11	J2−12	Function
OPEN	OPEN	Electronic Pot
CLOSED	OPEN	Level 1, Input Setup, Command Source (parameter 1402)
OPEN	CLOSED	Preset #1
CLOSED	CLOSED	Preset #2

E−POT 3Wire

Provides speed Increase and Decrease inputs to allow E−POT (Electronic Potentiometer) operation with 3 wire inputs. The opto inputs can be switches as shown in Figure 3-27 or logic signals from another device.

Figure 3-27 E−POT 3Wire Connection Diagram

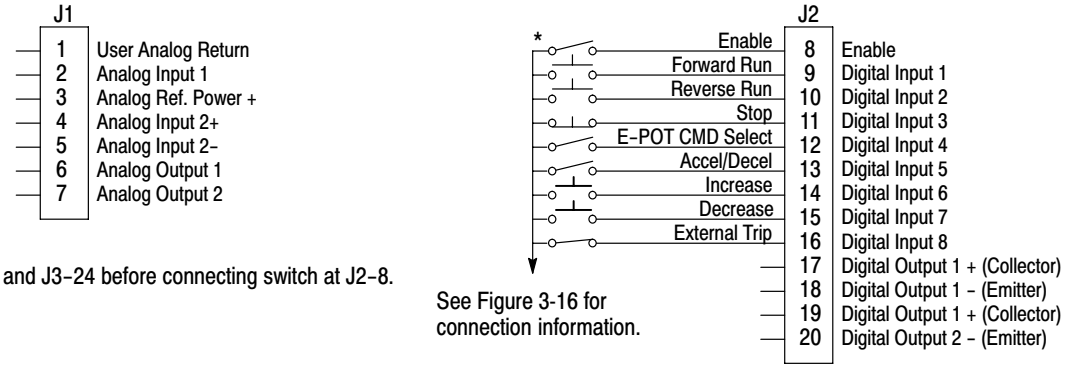

*Note: Remove factory jumper from J2−8 and J3−24 before connecting switch at J2−8.

See recommended tightening torques in Section 6.

J2−8 CLOSED allows normal control operation.
OPEN disables the control and the motor coasts to a stop.

J2−9 MOMENTARY CLOSED starts motor operation in the Forward direction.

J2−10 MOMENTARY CLOSED starts motor operation in the Reverse direction.

Note: Closing both J2−9 and J2−10 at the same time will reset a fault.

J2−11 Momentary OPEN motor decels to stop (depending on Decel time).

J2−12 CLOSED selects Level 1 Command Source parameter value.
OPEN selects E−POT.

J2−13 CLOSED selects ACC / DEC / S-ACC / S-DEC group 2.
OPEN selects ACC / DEC / S-ACC / S-DEC group 1.

J2−14 MOMENTARY CLOSED increases motor speed while contact is closed.

J2−15 MOMENTARY CLOSED decreases motor speed while contact is closed.

J2−16 Optional External Trip input (not required). If used, you must set Level 2 Drive Protect block, External Trip to “ON”.
CLOSED allows normal operation.
OPEN causes an External Trip to be received by the control (when programmed to “ON”).

Network Provides bipolar speed or torque control. Preset speeds are set in software. The opto inputs can be switches as shown in Figure 3-28 or logic signals from another device.

Figure 3-28 Network Connection Diagram

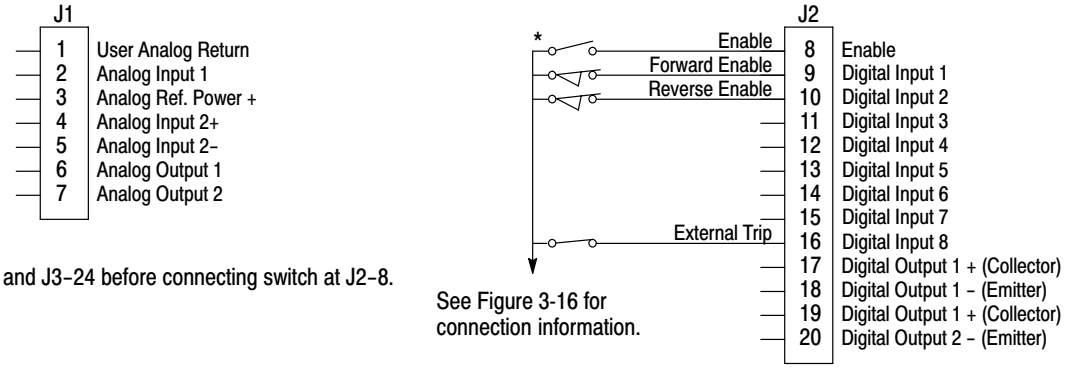

J2–8 CLOSED allows normal control operation.
OPEN disables the control and the motor coasts to a stop.

J2–9 CLOSED to enable operation in the Forward direction.
OPEN TO DISABLE Forward operation (drive will decel to a stop if a Forward command is still present).
Reverse operation is still possible if J2–10 is closed.

J2–10 CLOSED to enable operation in the Reverse direction.
OPEN to disable Reverse operation (drive will decel to a stop if a Reverse command is still present).
Forward operation is still possible if J2–9 is closed.

J2–16 Optional External Trip input (not required). If used, you must set Level 2 Drive Protect block, External Trip to “ON”.
CLOSED allows normal operation.
OPEN causes an External Trip to be received by the control (when programmed to “ON”).

Table 3-20 Modbus Coils that Affect this Mode

Coil		Coil	
2	Torque mode (Open Vector only)	15	Jog mode
3	Speed mode	33	Keypad reference source (local)
4	Orientation, absolute position orientation (Closed Vector or AC Servo only)	34	Terminal block reference source (remote)
5	Position Command absolute (for future use)	35	Network reference source
6	Position Command incremental (for future use)	42	Select Acc/Dec Group 1
7	Position Command track (for future use)	43	Select Acc/Dec Group 2
8	Position Command external (for future use)	78	Stop, stops the motor
9	Homing (available in Closed Vector or AC Servo only)	79	Forward enable
10	Process Torque	80	Reverse enable
11	Process velocity	81	Bipolar mode
13	Network current limiting	82	Network Drive enable and drive hardware enable must both be set else drive is disabled

Profile Run Provides seven run profiles to setup a cyclic operation or test cycle. The opto inputs can be switches as shown in Figure 3-29 or logic signals from another device. Speed settings for Speed curve 1 – 7 is Preset Speed 1 to Preset Speed 7.

Figure 3-29 Profile Run Connection Diagram

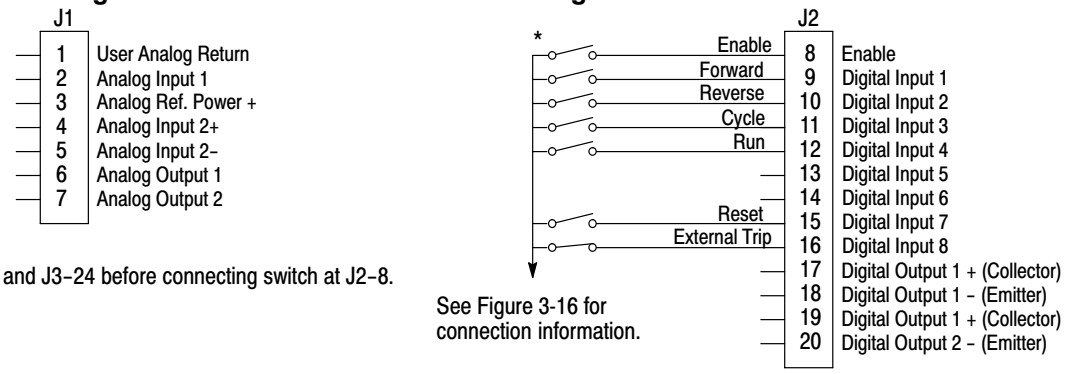

*Note: Remove factory jumper from J2-8 and J3-24 before connecting switch at J2-8.

See recommended tightening torques in Section 6.

J2–8 CLOSED allows normal operation.
OPEN disables the control and motor coasts to a stop.

J2–9 CLOSED to maintain operation in the Forward direction.
OPEN TO DISABLE Forward operation (drive will decel to a stop if a Forward command is still present).
Reverse operation is still possible if J2–10 is closed.

J2–10 CLOSED to maintain operation in the Reverse direction.
OPEN to disable Reverse operation (drive will decel to a stop if a Reverse command is still present).
Forward operation is still possible if J2–9 is closed.

J2–11 CLOSED runs the profile for an indefinite number of cycles. When the Level 3, Profile Run, Number of Cycles (P#3001) cycle count is reached, the counter is reset and the mode restarts (continuous cycling).
Example: If P#3001 = 5 the profile runs 5 times, the counter is reset to zero, and will begin running 5 more cycles immediately. As long as pin 11 is closed it will keep resetting the count to zero every time the number of cycles is reached.
OPEN cycle mode is terminated when cycle count is reached.

J2–12 CLOSED uses Run Command from J2–9 or J2–10.
OPEN uses Run Command from Keypad.

J2–13 Not used.

J2–14 Not used.

J2–15 CLOSED resets an alarm or fault.
OPEN normal operation.

J2–16 Optional External Trip input (not required). If used, you must set Level 2 Drive Protect block, External Trip to “ON”.
CLOSED allows normal operation.
OPEN causes an External Trip to be received by the control (when programmed to “ON”).

Bipolar Encoderless Vector mode only. Provides bipolar speed or torque control. Preset speeds are set in software, the control is operated by the digital inputs and the command source. The opto inputs can be switches as shown in Figure 3-30 or logic signals from another device.

Figure 3-30 Bipolar Connection Diagram

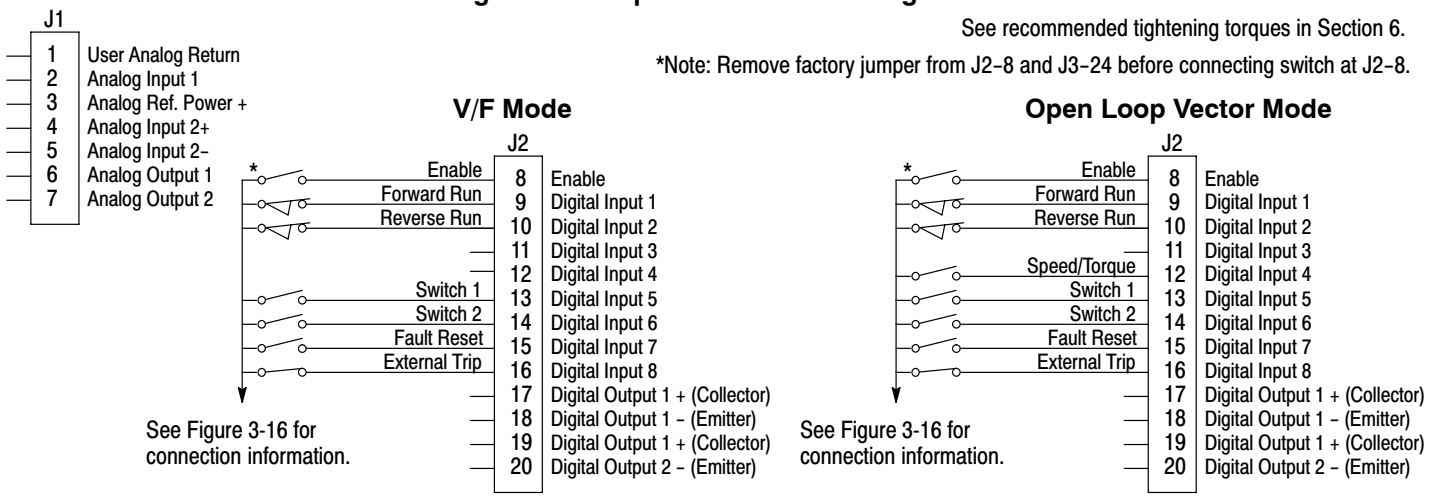

J2–8 CLOSED allows normal control operation.
OPEN disables the control and the motor coasts to a stop.

J2–9 CLOSED to enable operation in the Forward direction.
OPEN TO DISABLE Forward operation (drive will decel to a stop if a Forward command is still present).
Reverse operation is still possible if J2–10 is closed.

J2–10 CLOSED to enable operation in the Reverse direction.
OPEN to disable Reverse operation (drive will decel to a stop if a Reverse command is still present).
Forward operation is still possible if J2–9 is closed.

Note: If J2–9 and J2–10 are both opened, the drive will decel to a stop.

J2–12 CLOSED puts the control in torque command mode. **Open Loop Vector Mode Only.**
OPEN puts the control in speed (velocity) command mode.

J2–13 & 14 Select from four parameter tables as defined in Table 3-21.

J2–15 Momentary CLOSED to reset fault condition.
OPEN allows normal operation.

J2–16 Optional External Trip input (not required). If used, you must set Level 2 Drive Protect block, External Trip to “ON”.
CLOSED allows normal operation.
OPEN causes an External Trip to be received by the control (when programmed to “ON”).

Table 3-21 Bipolar Mode Table Select Truth Table

J2–13	J2–14	Function
Open	Open	Parameter Table 1 (T1)
Closed	Open	Parameter Table 2 (T2)
Open	Closed	Parameter Table 3 (T3)
Closed	Closed	Parameter Table 4 (T4)

See Multiple Parameter Sets in this section.

Multiple Parameter Sets

The following procedure allows you to program up to four complete sets of parameter values and to use these multiple parameter sets. Each parameter table must be properly initialized before use. Each table must have an operating mode that supports table switching (Process Control, Bipolar or Network) and all motor data and related parameters must be the same in each table. When programming each parameter set, use the ENTER key to accept and automatically save parameter values.

Note: The control can be programmed in the REMOTE mode with the drive enabled. The control must be disabled to change the operating mode parameter. The operating mode is not stored with the other parameters in a parameter table.

1. If this is a new installation, do this procedure after the Pre-Operation Checklist and Power-Up Procedures at the end of this section.
2. Set the Level 1 INPUT block, Operating Mode parameter value to BIPOLAR in each of the parameter sets.
3. Set switches J2−13 and J2−14 to Parameter Table 1 (both switches open). Be sure switches J2-8, J2−9 and J2−10 are OPEN.
   Select Quick Setup from the main Keypad menu. Perform each step including auto tune.
   This creates and saves the first parameter set which is numbered Table 1.
4. Set switches J2−13 and J2−14 to Parameter Table 2. Be sure switches J2-8, J2−9 and J2−10 are OPEN. Select Quick Setup from the main Keypad menu. Perform each step including auto tune. This creates and saves the second parameter set which is numbered Table 2.
5. Set switches J2−13 and J2−14 to Parameter Table 3. Be sure switches J2-8, J2−9 and J2−10 are OPEN. Select Quick Setup from the main Keypad menu. Perform each step including auto tune. This creates and saves the third parameter set which is numbered Table 3.
6. Set switches J2−13 and J2−14 to Parameter Table 4. Be sure switches J2-8, J2−9 and J2−10 are OPEN. Select Quick Setup from the main Keypad menu. Perform each step including auto tune. This creates and saves the final parameter set which is numbered Table 4.
7. Remember that to change the value of a parameter in one of the parameter tables, you must first select the table using the switches. You cannot change a value in a table until you have first selected that table.

Note: The active parameter table is selected by Level 2:Drive Configure:Active Parameter Table P# 0052.

Example:

Before attempting to switch parameter tables during operation “on the fly” using the digital inputs J2−13 & 14, the operating mode for each parameter table to be used must be initialized. Specifically, to switch from Table 1 to Table 2 then back to Table 1 both parameter Table 1 and parameter Table 2 must have operating modes that support table switching. Otherwise, once the switch occurs, switching back will not be possible.

To illustrate this, prior to running Bipolar Mode perform the following steps:

1. Use the keypad, set Level 2:Drive Configure:Active Parameter Table to 0 “Table 1”.
2. Go to Level One and set Level 1: Input Setup:Operating Mode to Bipolar.

Repeat the above steps but this time for Table 2.

3. Use the keypad, set Level 2:Drive Configure:Active Parameter Table to 1 “Table 2”.
4. Go to Level One and set Level 1: Input Setup:Operating Mode to Bipolar.

The drive is now properly configured to switch between parameter Table 1 and Table 2 “on the fly.”

PLC Provides control from another PLC device (Programmable Logic Control) as described in Section 7 of this manual. Preset speeds are set in software. The opto inputs can be switches as shown in Figure 3-31 or logic signals from another device.

Figure 3-31 PLC Connection Diagram

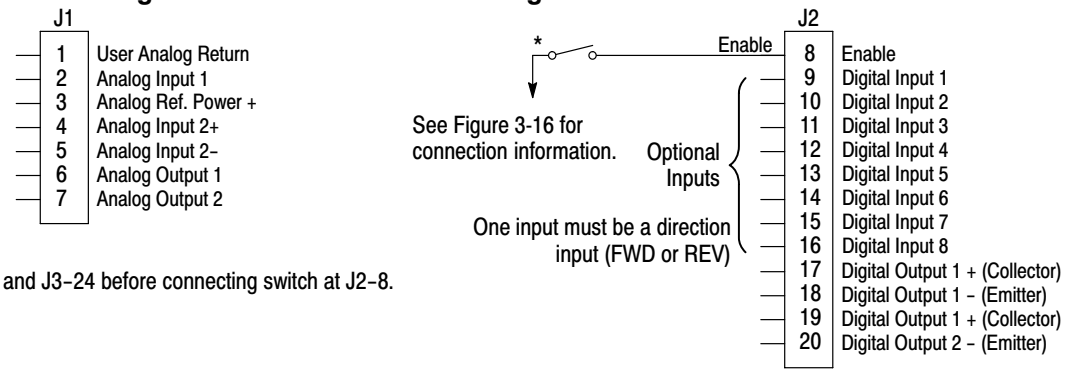

*Note: Remove factory jumper from J2–8 and J3–24 before connecting switch at J2–8.

See recommended tightening torques in Section 6.

Digital Outputs Digital Outputs 1 and 2 are opto isolated. Internal supply or a customer provided, external power source may be used as shown in Figure 3-32. The maximum voltage from opto output to common when active is 1.0 VDC (TTL compatible).

If the Digital Outputs are used to directly drive a relay, a flyback diode rated at 1A, 100V (IN4002 or equivalent) minimum should be connected across the relay coil. See Figure 3-33. Each opto output is programmed in the Output programming block.

Figure 3-32 Digital Output Power Connections

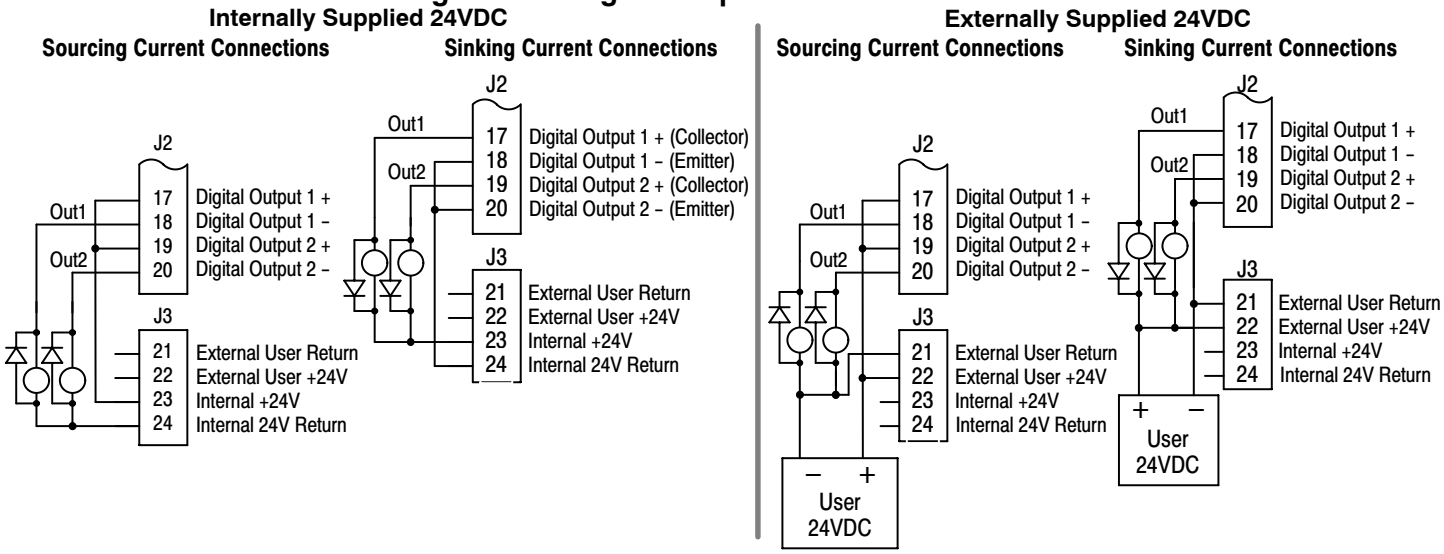

See recommended tightening torques in Section 6.

Note: Digital Outputs are rated to 24VDC @ 60mA resistive (non–inductive).
Relay Outputs are rated to 10–30VDC or 240VAC @ 5A resistive (non–inductive).

Relay Outputs Relay Outputs 1 and 2 provide N.O. and N.C. voltage free contacts. The internal relay function is shown in Figure 3-33.

Figure 3-33 Relay Contacts

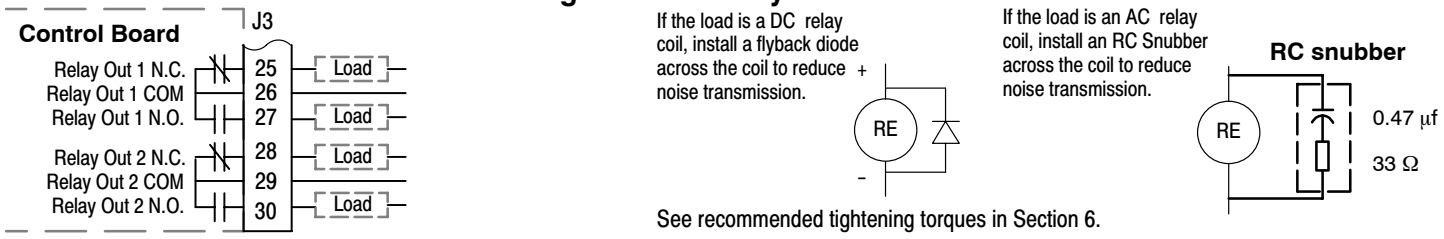

See recommended tightening torques in Section 6.

USB Port The USB port shown in Figure 3-13 is a full 12Mbps USB 2.0 compliant port for serial communications. The connections are described in Figure 3-34 and Table 3-22.

Figure 3-34 USB Receptacle Pin Identification

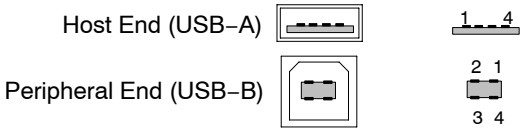

Table 3-22 USB Port Connections

Pin	Signal Name	Description
1	V_{bus}	USBus power from the host for monitoring.
2	D–	Data Return
3	D+	Data In
4	GND	Power Supply Return

Figure 3-35 Expansion Board Location

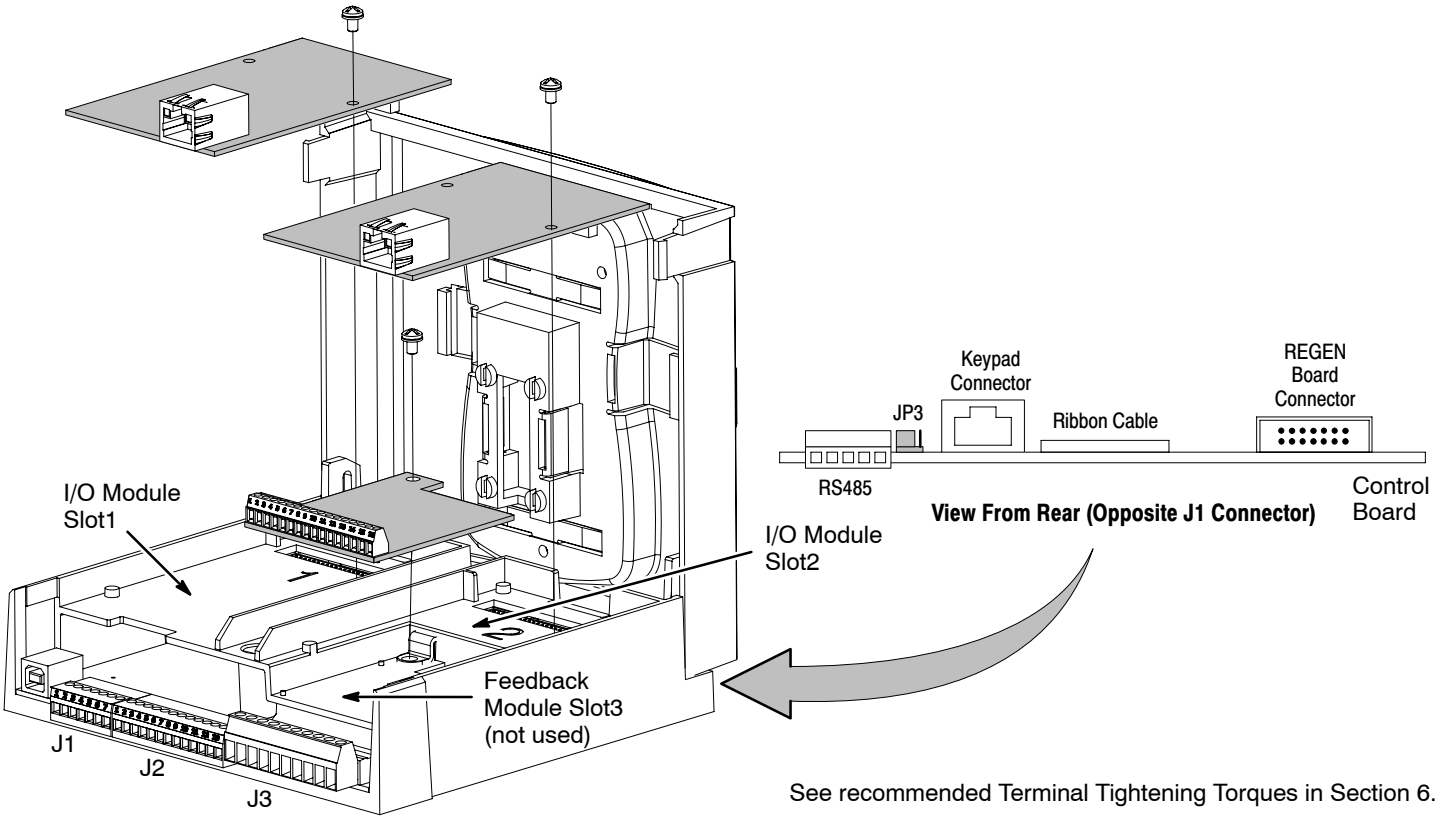

See recommended Terminal Tightening Torques in Section 6.

Communication Expansion Boards

The communication and feedback module slots are shown in Figure 3-35. All option boards are designed as plug−in modules.

RS485 Modbus The serial communications port on the H2 control board supports RS485 communications. The baud rate and node address are selectable from the Keypad. Jumper JP3 (Figure 3-35) on the control board sets termination. As shown (pins 2 and 3 jumpered) no terminator resistor is used. Setting the jumper to pins 1 and 2 selects the 120 ohm terminating resistor for the RS485 cable. The RS485 connections are described in Table 3-23. Refer to MN744 for connection and software information.

Table 3-23 RS485 Multi−Drop Port Connections

	Pin	Signal Name	Description
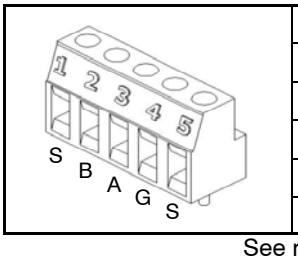	1	SCR	Screen termination, connected to chassis on the control board.
	2	B	RS485 data line
	3	A	RS485 data line
	4	GND	Common
	5	SCR	Screen termination, connected to chassis on the control board.

See recommended Terminal Tightening Torques in Section 6.

Opto-Isolated Inputs

The equivalent circuit of the nine opto inputs is shown in Figure 3-36. The function of each input depends on the operating mode selected and are described previously in this section. This Figure also shows the connections using the internal opto input Supply.

Figure 3-36 Opto-Input Connections

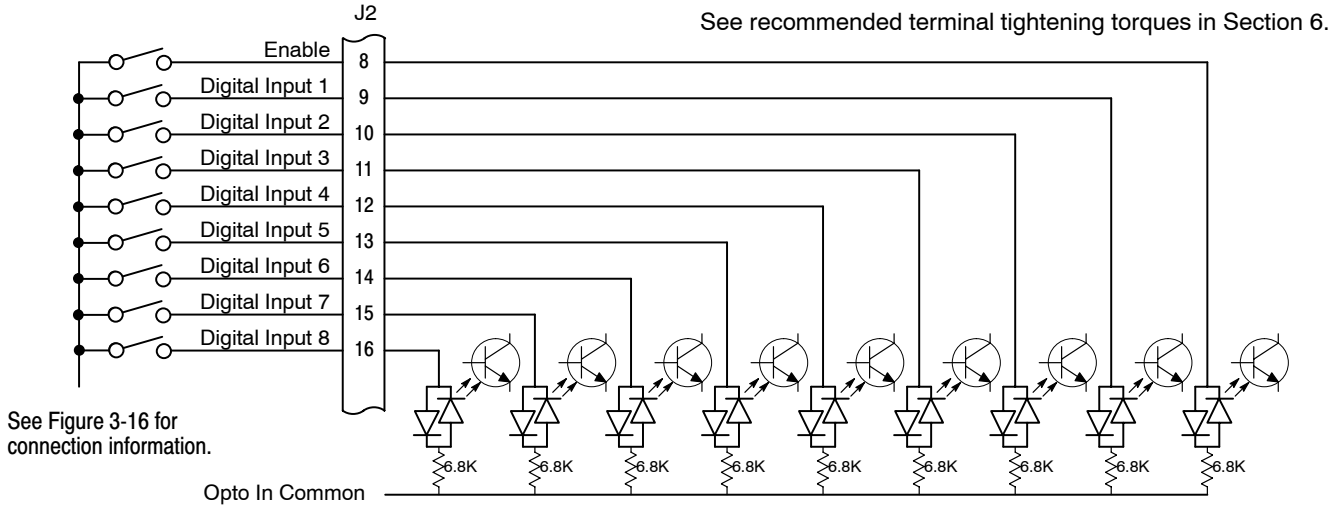

Opto Isolated Outputs

The outputs are opto isolated and may be configured for sinking or sourcing. However, all must be configured the same. The maximum voltage from opto output to common when active is 1.0 VDC (TTL compatible). The equivalent circuit for the opto isolated outputs is shown in Figure 3-37.

Figure 3-37 Opto-Output Equivalent Circuit

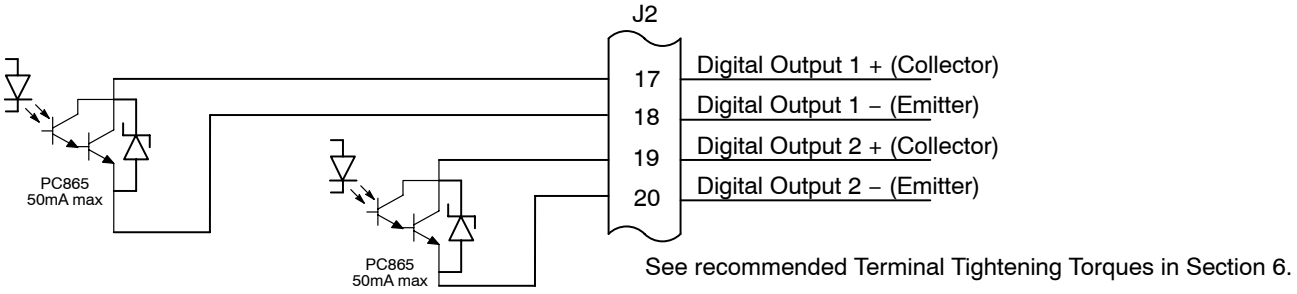

Pre-Operation Checklist Check of Electrical Items

1. Verify AC line voltage at source matches control rating.
2. Verify power is disconnected from the control.
3. Inspect all power connections for accuracy, workmanship and tightness and compliance to codes.
4. Verify control and motor are grounded to each other and the control is connected to earth ground.
5. Check all signal wiring for accuracy, workmanship and tightness and compliance to codes..
6. Be certain all brake coils, contactors and relay coils have noise suppression. This should be an R-C filter for AC coils and reverse polarity diodes for DC coils. MOV type transient suppression is not adequate.

WARNING: Make sure that unexpected operation of the motor shaft during start up will not cause injury to personnel or damage to equipment.

Powerup Procedure

1. Remove all power from the control.
2. Verify that any enable inputs to J2-8 are open.
3. Disconnect the motor from the load (including coupling or inertia wheels).
4. Turn power on. Be sure there are no faults.
5. Set the Level 2 Output Limits block, “OPERATING ZONE” parameter as desired (STD CONST TQ, STD VAR TQ, QUIET CONST TQ or QUIET VAR TQ).
6. If external dynamic brake hardware is used, set the Level 2 Brake Adjust block “Resistor Ohms” and “Resistor Watts” parameters.
7. Enable the control (J2–8 connect to J3–24).

WARNING: The motor shaft will rotate during this procedure. Be certain that unexpected motor shaft movement will not cause injury to personnel or damage to equipment.

8. Select Quick Setup from the main Keypad menu. Perform each step including auto tune.
9. Set the Level 1 Motor Control block, “V/F Profile” and Three Point parameters for your application.
10. If the load is a high initial starting torque type, the torque boost and Accel time may need to be increased. Set the Level 1 Motor Control block, Boost parameters and the Level 1 Accel/Decel parameters as required.
11. Remove all power from the control.
12. Couple the motor to its load.
13. Verify freedom of motion of motor shaft.
14. Verify the motor coupling is tight without backlash.
15. Verify the holding brakes if any, are properly adjusted to fully release and set to the desired torque value.
16. Turn power on. Be sure no errors are displayed.
17. Run the drive from the keypad using one of the following: the arrow keys for direct speed control, a keypad entered speed or the JOG mode.
18. Select and program additional parameters to suit your application.

The control is now ready for use the in keypad mode. If a different operating mode is desired, refer to Section 3 Operating Modes and Section 4 Programming and Operation.

Workbench

As an alternative to using the keypad for programming and setup, Baldor's Workbench software version 5.5 or greater can be used with H2 controls. When the software is installed and configured, the help topics provide information for how to use the software. The following procedure will help you install and configure the software to minimize difficulty.

Before you can use Workbench software, it must be installed on your PC's hard drive.
Be sure that the USB port of the H2 control is connected to a USB port on your PC.
This must be connected to establish communication after the software is installed.

Install USB Driver for H2 Control

The H2 control connects to a PC by using USB cable connection. Windows requires that the USB drivers for the H2 control be installed. This procedure installs the USB driver.

1. The software must be downloaded from the Baldor site: http://www.baldor.com
   Simply log into that web site and select Products then select AC Controls then select H2 Inverter to locate the Software tools.
   2. **USB Device Driver**

Figure 3-38 USB Driver

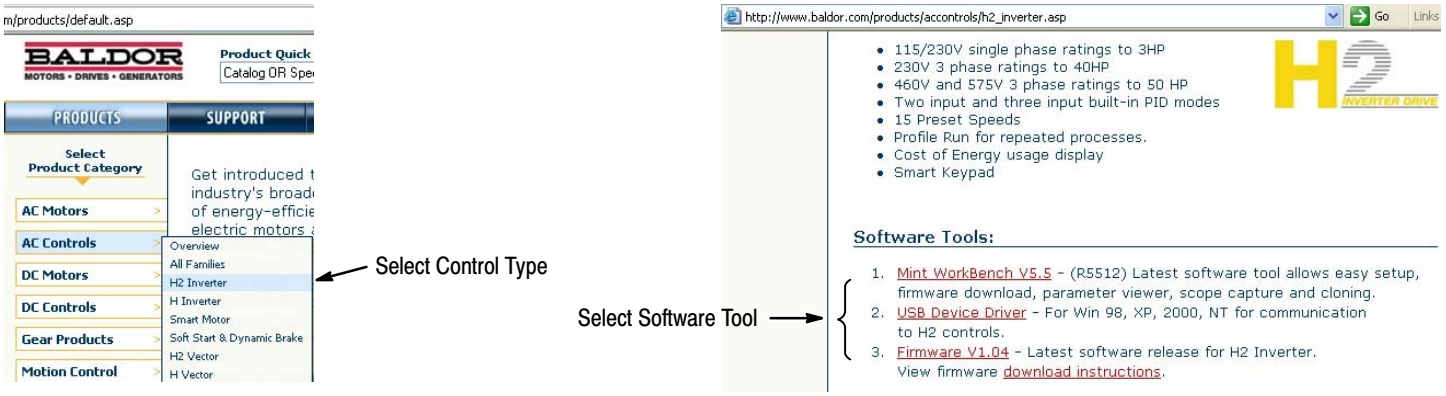

2. Click on USB Device Driver and select Open to view the uncompressed files.

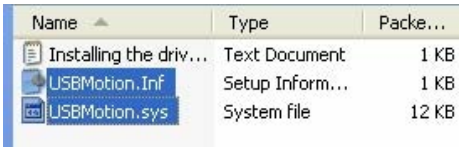

3. Select the inf and sys files and copy them to a folder on your hard drive. These will be installed next.
4. Be sure the H2 control is powered up.
5. Connect the USB cable to the control. Windows should find a new USB device.
6. Install the USB drivers.
   a. Choose "install from a list or specific location" and click Next.
   b. Choose "Don't search I will choose the driver to install".
   c. Click "Have Disk". Then enter the location that you stored the inf and sys files (in step 3) and click Next to install the driver files.

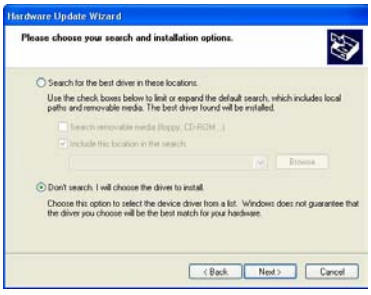

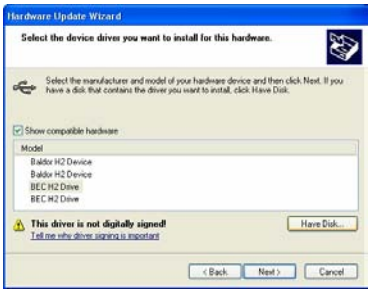

7. Proceed to the Workbench installation procedure.

Install Workbench

1. Use the Add/Remove Software feature of the Windows control panel and remove previous versions of Workbench software.
2. The software must be downloaded from the Baldor site: http://www.baldor.com
   Simply log into that web site, Figure 3-38, and locate
   1. Mint WorkBench v X.x
3. Click on Download the software, and run the installation program.
4. When installation is complete, the Workbench program will start, see Figure 3-39.
   a. Click “Start New Project”.
   b. Click “Scan”.
   c. Select “H2” platform from the list.
   d. Click Select and the workbench main menu is displayed, see Figure 3-40.

Figure 3-39 Workbench Software Start–up

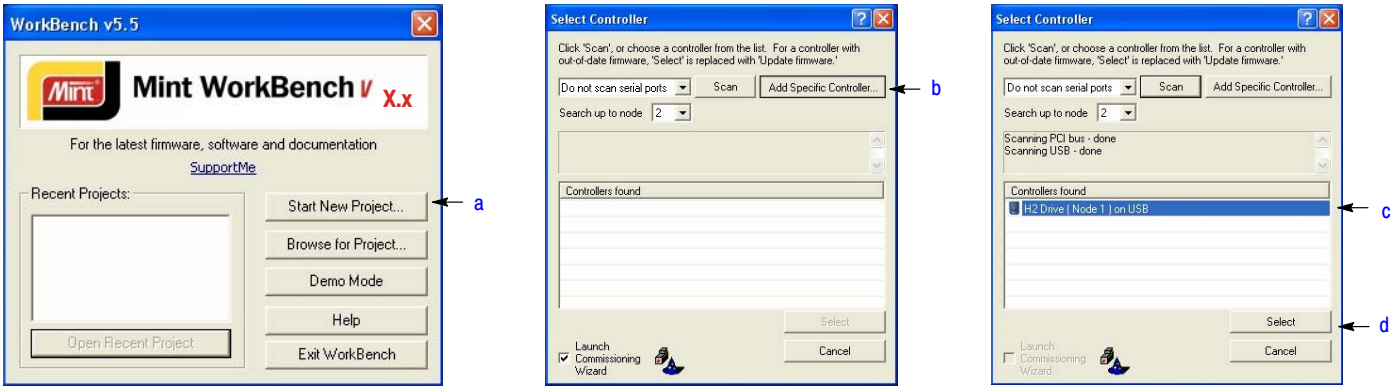

Figure 3-40 Communication Established

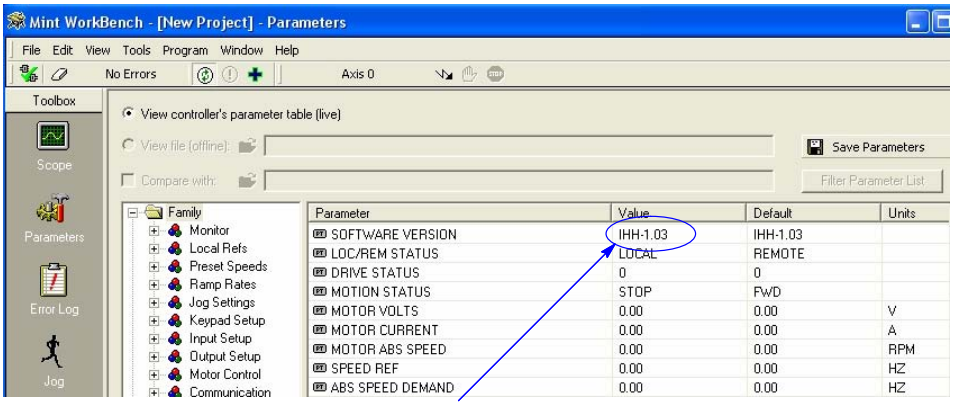

Software version is Inverter (IHH) version 1 release 03.

5. Parameter values can be modified as desired.

Figure 3-41 Workbench Main Menu

Change a Parameter Value

Example:

Change Preset Speed 1 to 21.00Hz.
Click on Preset Speeds Block.
Click in the Value column for Preset Speed 1.
Type in the new value “21.00Hz” press enter.
Note that the keypad will instantly display the new value.

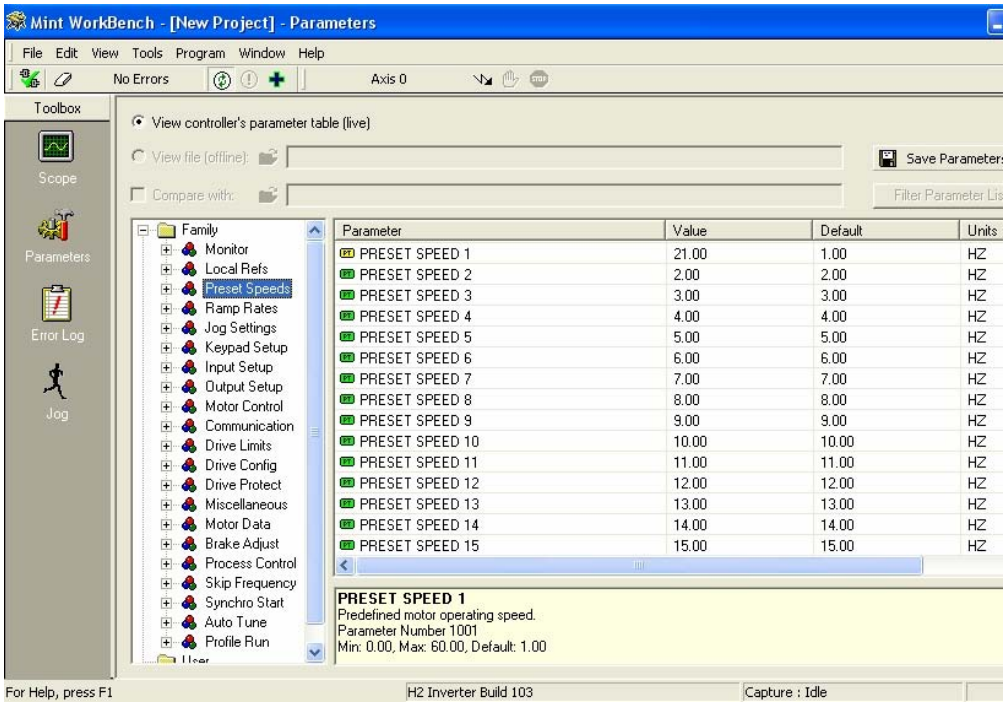

If the parameter value is a selection, a list will appear for you to make the selection.

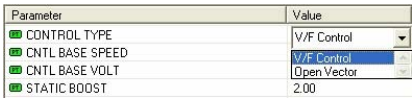

6. When all parameter values are as desired, they can be saved to a file. Click File, Save File, see Figure 3-42. The ptx file is saved in My Documents\My Mint directory.
7. When complete, the entire project can be saved to your PCs hard disk for future use. Click File, Save Project, see Figure 3-42. The wbx file is saved in C:\Program Files\Mint Machine Center\Firmware\ you can choose the directory H2 Inverter etc.

Figure 3-42 Save Parameters & Project

Note:
Enter a filename.
The .ptx extension is automatically added.

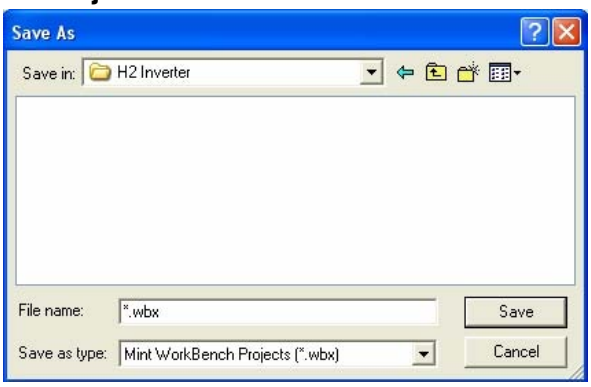

Note:
Enter a filename.
The .wbx extension is automatically added.

The help menus provided with the software can be used to explore other features and descriptions of menu choices. As previously stated, either the Workbench program or the Keypad can be used to adjust parameter values for the application.

Update Firmware

Installing chx Files

(If you are installing msx files skip this procedure and go to “Installing msx Files”).

This procedure erases memory and restores factory settings. All user data will be lost. After the firmware download, all user data values must be reprogrammed.

1. The software must be downloaded from the Baldor site: http://www.baldor.com
   Simply log into that web site, Figure 3-38. Locate and click on
   3. Firmware
   Firmware for H2 Inverter
2. Save the firmware file to a location on your hard disk
   (for example: C:\Program Files\Mint Machine Center\Firmware\H2 Inverter\IHH_1_04.chx).

This procedure erases memory and restores factory settings. All user data will be lost. After the firmware download, all user data values must be reprogrammed.

3. Start the Workbench program as before, see Figure 3-43.
   a. Select “Download Firmware” from the Tools menu.
   b. Select “Advanced” then “Download Firmware File”, click “Yes” at the warning to download.
   c. Select the firmware file to download (for example: IHH_1_04.chx).
   d. When complete, the new firmware version is displayed and the control is ready for use.

Note: All user settings and motor parameter values have been over written by factory settings.

Figure 3-43 Workbench Firmware Update

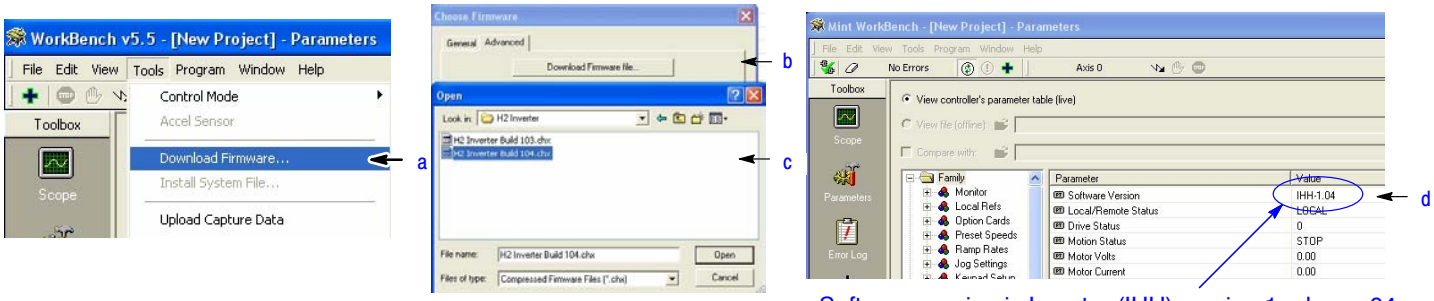

Software version is Inverter (IHH) version 1 release 04.

Installing A Mint System (.msx) file
(If you are installing chx files skip this procedure and go to “Installing chx Files”).

This procedure erases memory and restores factory settings. All user data will be lost. After the firmware download, all user data values must be reprogrammed.

1. The msx file must be saved to a location on your hard disk (for example: C:\Program Files\Mint Machine Center\Firmware\H2 Inverter\H2 Inverter Build 104.msx).

This procedure installs the msx file contents within the same directory (chx, ini and txt files are extracted).

2. Start the Workbench program as before, see Figure 3-39.
   a. Select “Install System File Firmware” from the Tools menu, Figure 3-44.
   b. Select the firmware file to download (for example: H2 Inverter Build 104.msx)
   c. Select OPEN.
   d. When complete, the install successful message is displayed, click OK.

Figure 3-44 Workbench Firmware Update

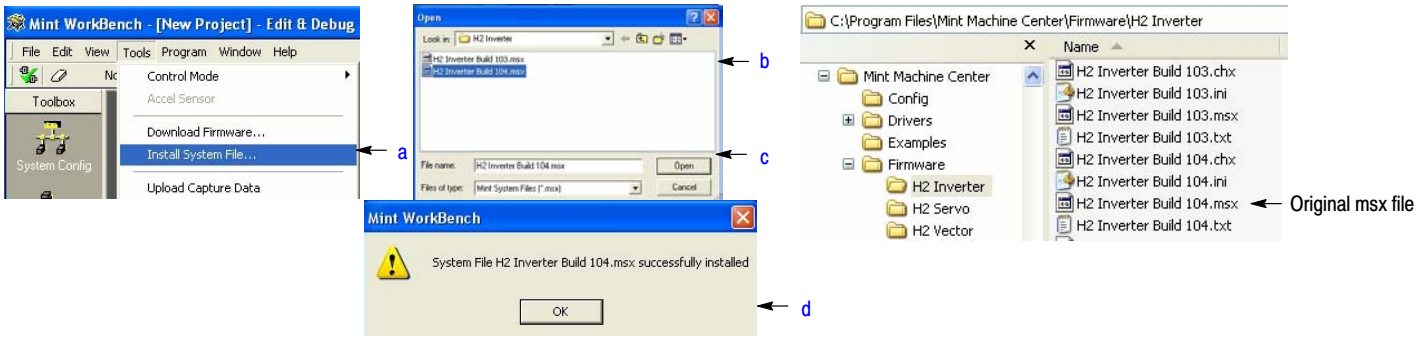

3. This procedure erases memory and restores factory settings. All user data will be lost. After the firmware download, all user data values must be reprogrammed.
   a. Select “Download Firmware” from the Tools menu, Figure 3-45.
   b. Select control Type and version to download.
   c. Select Download to control to download the firmware.
   d. Select YES to confirm download.
   e. When complete, the new firmware version is displayed and the control is ready for use.

Note: All user settings and motor parameter values have been over written by factory settings.

Figure 3-45 Workbench Firmware Update

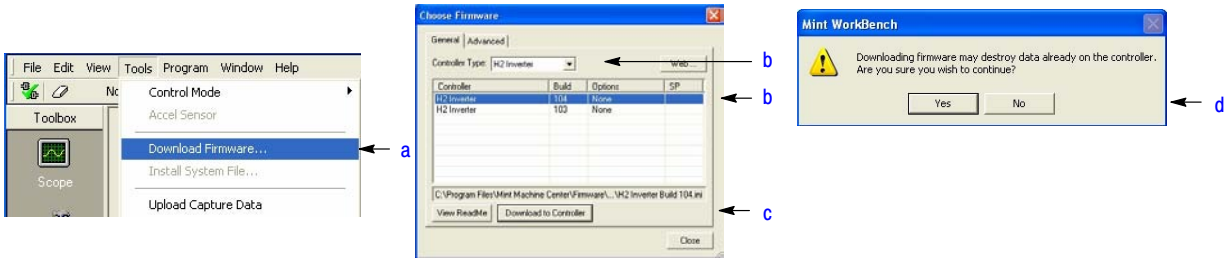

Section 4
Programming and Operation

Overview

The keypad is used to program the control parameters, to operate the motor and to monitor the status and outputs of the control by accessing the display options, the diagnostic menus and the fault log.

Figure 4-1 Keypad

Keypad Display - Displays status information during Local or Remote operation. It also displays information during parameter setup and fault or Diagnostic Information.

A - Alternates or "Toggles" between last two menu choices or function indicated by text displayed directly above key.

ENTER - Press ENTER to save parameter value changes. In the display mode the ENTER key is used to directly set the local speed reference. It is also used to select other operations when prompted by the keypad display.

MENU – Selects the Menu display. The following menu items are shown: Status, Diagnostics, Fault Log, Advanced Programming, and Quick Start

REV - When pressed, initiates a reverse direction run command.

STOP - Initiates a stop command.

Display Diagnostics –
I/O Status
I/O Function configuration
Modified parameters
Control Operation Data
Custom Units
Fault Display – 10 Faults with Time stamp

R – Clear faults or undo parameter edit changes or function indicated by text displayed directly above key.

▲ **-** (Up Arrow), ▼ **-** (Down Arrow)
◀ **-** (Left Arrow), ▶ **-** (Right Arrow)
Moves cursor to select menu choices.

LOCAL REMOTE - Switches between local and remote modes.

HELP - Provides help at each display screen, setup parameter and fault. Press to view/close help information.

JOG - Initiates Jog mode when pressed. Press FWD or REV for motion. Only active in local mode.

FWD - When pressed, initiates a forward direction run command.

Indicator Lights - (On indicated Key)
STOP key with red light indicator.
FWD key with green light indicator.
REV key with green light indicator.
JOG key with green light indicator.

Display features:

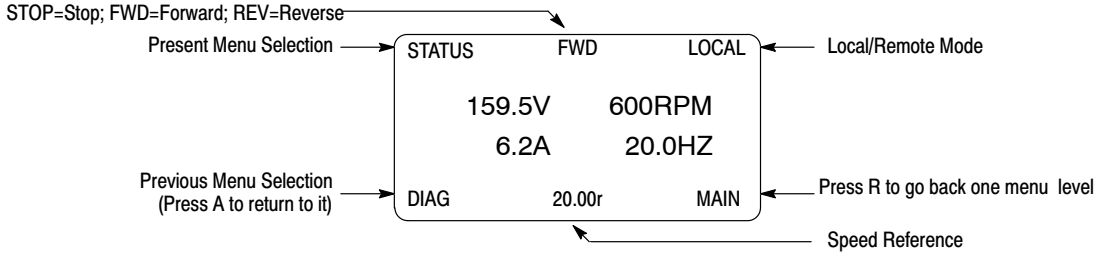

Programming Mode <u>ONLY</u> Display features:

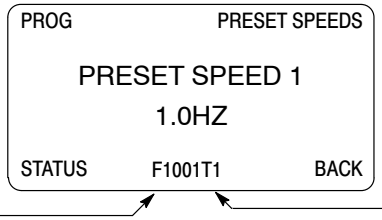

The first character of the parameter number has the following meaning:
F = Factory Setting (parameter value has not been changed)
C = Custom value set by user (not factory setting)
V = Parameter value may be Viewed but not changed.
L = Parameter value is locked, security code required.

Parameter Table used, T1, T2, T3, T4.

Status Display Mode The control is in the Status display mode at all times except when parameter values are changed (Programming mode).

When AC power is applied to the control the keypad should display the status.

Action	Description	Display	Comments
Apply Power	Logo is displayed for a short time. The Status screen is then displayed.		
	Normal status screen at start up. Displays Motor Voltage, Motor Amps, Motor Speed RPM and Motor Frequency Hz.	STATUS STOP LOCAL 0.0V 0RPM 0.0A 0.0HZ DIAG 0.00r MAIN	The display can be changed to several formats by pressing the ▶ or ◀ keys.
Press ▶ key	Next screen format is displayed.	STATUS LOCAL STOP 0 RPM 0.0 A DIAG 0.00r MAIN	
Press ▶ key	Next screen format is displayed.	STATUS LOCAL STOP 0 RPM 0.00 HZ DIAG 0.00r MAIN	
Press ▶ key	Next screen format is displayed.	STATUS LOCAL STOP 0.0 A 0.0 V DIAG 0.00r MAIN	
Press ▶ key	Next screen format is displayed.	STATUS LOCAL STOP 0 RPM 0.0 V 0.0 A DIAG 0.00r MAIN	
Press ▶ key	Next screen format is displayed.	STATUS LOCAL STOP 0.0 NM 0.0 A 0 RPM DIAG 0.00r MAIN	

Status Display Mode Continued

Action	Description	Display	Comments
Press ▶ key	The first screen format is displayed.	STATUS STOP LOCAL 0.0V 0RPM 0.0A 0.0HZ DIAG 0.00r MAIN	
Press FWD key	Motor begins to rotate in the forward direction at the preset speed.	STATUS FWD LOCAL 159.5V 600RPM 0.2A 20.0HZ DIAG 0.00r MAIN	

Menu Display After power–up the display shows the Status screen. Press the Menu key to display menu options.

Action	Description	Display	Comments
Status Display		STATUS STOP LOCAL 0.0V 0RPM 0.0A 0.0HZ DIAG 0.00r MAIN	
Press Menu	Displays top level menu options.	STATUS QUICK SETUP PROGRAMMING EVENT LOG DIAGNOSTICS DISPLAY OPTIONS DIAG BACK	Press ▲ or ▼ to move cursor over the desired selection the press “Enter” to select and display the selection.

Quick Setup

From the Menu display screen, select Quick Setup and press Enter.

Parameter Status. All programmable parameters are displayed with an “F” at the bottom center of the display. “F” means it is the factory setting value. “C” means it is a custom value set by the user. “V” means the parameter value may be viewed but not changed while the motor is operating. If the parameter is displayed with an “L”, the value is locked and may not be changed until the security code is entered.

Action	Description	Display	Comments
Quick Setup Display	Control type display. The parameter number “1601” is given at the bottom center of the display. “F”1601 indicates it is at the factory setting and has not been changed.	QSETUP MOTOR CONTROL CONTROL TYPE V/F Control STATUS F1601T1 BACK	Press Enter to select the parameter and press the ▲ or ▼ keys to change the preset value to a different control type. Press enter when finished to exit and save the new value or R to exit without saving.
Press ▶ to go to the next Quick Setup screen.		QSETUP MOTOR DATA MOTOR RATED VOLT 240.0 V STATUS F2401T1 BACK	T1 indicates the Table Number or the parameter list in use. Four parameter tables are available, T1, T2, T3 or T4 (See Level 2, Drive Config, Active Param Table parameter P0052.)
Press ▶ to go to the next Quick Setup screen.		QSETUP MOTOR DATA MOTOR RATED AMPS 9.6 A STATUS F2402T1 BACK	
Press ▶ to go to the next Quick Setup screen.		QSETUP MOTOR DATA MOTOR MAG AMPS 6.1 A STATUS F2405T1 BACK	
Press ▶ to go to the next Quick Setup screen.		QSETUP MOTOR DATA MOTOR RATED SPD 1754 RPM STATUS F2403T1 BACK	
Press ▶ to go to the next Quick Setup screen.		QSETUP MOTOR DATA MOTOR RATED FREQ 60.00 HZ STATUS F2404T1 BACK	
Press ▶ to go to the next Quick Setup screen.		QSETUP MOTOR DATA CALC MOTOR MODEL No STATUS F2413T1 BACK	

Quick Setup Continued

Action	Description	Display	Comments
Press ▶ to go to the next Quick Setup screen.		QSETUP AUTO-TUNE ANA OFFSET TRIM No STATUS F2901T1 BACK	
Press ▶ to go to the next Quick Setup screen.		QSETUP INPUT SETUP OPERATING MODE Keypad STATUS F1401T1 BACK	
Press ▶ to go to the next Quick Setup screen.		QSETUP RAMP RATES ACCEL TIME 1 3.0 SEC STATUS F1101T1 BACK	
Press ▶ to go to the next Quick Setup screen.		QSETUP RAMP RATES DECEL TIME 1 3.0 SEC STATUS F1104T1 BACK	
Press ▶ to go to the next Quick Setup screen.		QSETUP DRIVE LIMITS MIN OUTPUT SPEED 0.00 HZ STATUS F2002T1 BACK	
Press ▶ to go to the next Quick Setup screen.		QSETUP DRIVE LIMITS MAX OUTPUT SPEED 60.00 HZ STATUS F2003T1 BACK	
Press ENTER or R to exit Quick Setup.		QSETUP END OF QUICK SET UP STATUS BACK	

Quick Setup Continued

How to Change a Value

These are the Quick Setup screens. To change a value, simply display the desired screen and press Enter and change the value. For example:

Action	Description	Display	Comments
Press ▶ to go to the next Quick Setup screen.	1601 indicates the parameter number and F indicates it is the factory value.	QSETUP MOTOR CONTROL CONTROL TYPE V/F Control STATUS F1601T1 BACK	
Press Enter to choose parameter value and edit.		EDIT MOTOR CONTROL CONTROL TYPE V/F Control END F1601T1 BACK	Press “R” to EXIT edit mode without saving changes.
Press the ▲ or ▼ keys to change parameter value.		EDIT MOTOR CONTROL CONTROL TYPE Open Vector END F1601T1 BACK	
Press Enter to save the parameter value and exit.		QSETUP MOTOR CONTROL CONTROL TYPE Open Vector STATUS C1601T1 BACK	

When editing a parameter value, the function of the “A” key (previous parameter block) shown in the lower left of the display changes to one of the following to help select the parameter value:

- TOP Press “A” to display and select the first value in the list of parameter values.
  When the first parameter value is displayed, press Enter or scroll to select a different value.
- END Press “A” to display and select the last value in the list of parameter values.
  When the last parameter value is displayed, press Enter or scroll to select a different value.
- DEF Press “A” to display and select the Factory Setting value.
- PREV Press “A” to display and select previous value.
- MIN Press “A” to display and select minimum parameter value.
- MAX Press “A” to display and select maximum parameter value.

Note: When END is displayed, Press “A” will display the last value in the list but then TOP or DEF is displayed. The “A” key allows you to quickly move the large lists of parameter choices. The value is not selected until you press “Enter”.

Save Parameter Values

The keypad keys and display work with the memory of the control. When a parameter value is displayed, the displayed value is the value stored in control memory. The changes are written to non−volatile memory and are stored even when power is removed. Normal control operation can resume when power is restored.

Keypad memory is only used to backup the four parameter tables stored in control memory. This means that after the parameters are configured for the application and the control operation is as desired, a copy of the parameters can be saved to keypad memory as a backup copy. This backup copy can be restored at any time. This is useful to restore program operation after a firmware update or to make several controls operate the same. It prevents having to make the changes to each control individually.

Action	Description	Display	Comments
Press Menu	Go to the Level 1 Keypad Setup block.	PRESET SPEEDS RAMP RATES JOG SETTINGS KEYPAD SETUP INPUT SETUP STATUS BACK	Press “Enter” to select.
Press Enter to edit Keypad Setup parameters.	Scroll to PARAMS TO KEYPAD	PROG KEYPAD SETUP PARAMS TO KEYPAD No STATUS F1310 BACK	Press “Enter” to change parameter value.
Press Enter to edit parameter.		edit KEYPAD SETUP PARAMS TO KEYPAD Yes STATUS F1310 BACK	Press ▲ to change value to YES.
Press Enter to load the parameter table values from control memory to keypad memory.		PROG KEYPAD SETUP PARAMS TO KEYPAD No STATUS F1310 BACK	Press “R” to return to Keypad Setup menu.

A copy of all four parameter tables have now been saved to non−volatile keypad memory.

Restore Parameter Values

The keypad keys and display work with the memory of the control. When a parameter value is displayed, the displayed value is the value stored in control memory. The changes are written to non−volatile memory and are stored even when power is removed. Normal control operation can resume when power is restored.

Keypad memory is only used to backup the four parameter tables stored in control memory. This means that after the parameters are configured for the application and the control operation is as desired, a copy of the parameters can be saved to keypad memory as a backup copy. This backup copy can be restored at any time. This is useful to restore program operation after a firmware update or to make several controls operate the same. It prevents having to make the changes to each control individually.

Action	Description	Display	Comments
Press Menu	Go to the Level 1 Keypad Setup block.	PRESET SPEEDS RAMP RATES JOG SETTINGS KEYPAD SETUP INPUT SETUP STATUS BACK	Press “Enter” to select.
Press Enter to edit Keypad Setup parameters.	Scroll to DOWNLOAD SELECT and change as desired.	PROG KEYPAD SETUP DOWNLOAD SELECT ALL STATUS F1311T1 BACK	**ALL**=Download all parameters. **Motor**= Download only Motor Parameters. **Other**=All parameters other than motor parameters.
Press Enter to edit Keypad Setup parameters.	Scroll to KEYPAD TO PARAMS	PROG KEYPAD SETUP KEYPAD TO PARAMS No STATUS F1312T1 BACK	Press “Enter” to change parameter value. Note that T1 is missing from the parameter number. It is not part of the stored parameter table values T1, T2, T3 and T4.
Press Enter to edit parameter.		edit KEYPAD SETUP KEYPAD TO PARAMS Yes STATUS F1312T1 BACK	Press ▲ to change value to YES.
Press Enter to load the parameter table values from keypad memory to control memory.		PROG KEYPAD SETUP KEYPAD TO PARAMS No STATUS F1312T1 BACK	Press “R” to return to Keypad Setup menu.

A copy of all four parameter tables have now been restored to non−volatile control memory.

Programming

The Program Mode is used to:

1. Enter motor data.
2. Auto tune the motor.
3. Customize the drive (Control and Motor) parameters to your application.

Parameter Status. All programmable parameters are displayed with its parameter number shown at the bottom center of the display. “F” means it is the factory setting value. “C” means it is a custom value set by the user. “V” means the parameter value may be viewed but not changed while the motor is operating. If the parameter is displayed with an “L”, the value is locked and may not be changed until the security code is entered.

Action	Description	Display	Comments
Programming Display	Top Level Programming menu.	LEVEL 1 BLOCKS LEVEL 2 BLOCKS LEVEL 3 BLOCKS MODIFIED PARAMS STATUS BACK	Press enter to program level 1 block parameters. or Press ▼ to view Level 2 blocks. Press ▼ to view Level 3 blocks. Press ▼ to view list of parameters that have been changed from their factory settings.
Press Enter to edit Level 1 parameters.	Top of Level 1 programming Block 1 menu.	PRESET SPEEDS RAMP RATES JOG SETTINGS KEYPAD SETUP INPUT SETUP STATUS BACK	Press ▼ to scroll to next level 1 parameter.
Press Enter to select Preset Speeds.	Preset speed 1 value display.	PROG PRESET SPEEDS PRESET SPEED 1 1.00 HZ STATUS F1001T1 BACK	Press ▶ to go to next Preset Speed parameter.
Press Enter to edit Preset Speed 1.	Press ▲ or ▼ to increase or decrease the value highlighted by the cursor.	EDIT PRESET SPEEDS PRESET SPEED 1 001.00 HZ MAX F1001T1 BACK	Press ▶ or ◀ to move cursor. Press “A” to select the maximum allowable speed.
	Press ▲ to increase the value.	EDIT PRESET SPEEDS PRESET SPEED 1 002.00 HZ MAX F1001T1 BACK	Press R to exit editing the value without saving or press Enter to exit and save the new value.
Press Enter to save the new value and stop editing.		PROG PRESET SPEEDS PRESET SPEED 1 2.00 HZ STATUS C1001T1 BACK	Press R to return to previous screen. Press A to go to Status screen.

Parameter values in other Level 1, 2 and 3 blocks can be selected and edited in the same way.

Event Log

From the Menu display screen, select Event Log and press enter. Trace is used to display control conditions present at the time the fault occurred. A separate trace log is recorded for each event. This is described in Section 5 of this manual.

Action	Description	Display	Comments
Event Log Display	Displays error name, Entry # and time the error occurred. LOW INITIAL BUS 0 Date Time Entry # DD/MM/YY HH:MM 0–9	EV. LOG STOP LOCAL LOW INITIAL BUS 0 04–Jul–06 09:35:00 STATUS TRACE	Press ▲ or ▼ to view next entry. Press R to view Trace log. Press A to return to Status Menu. Note: Trace is described in Section 5 of this manual.

Trace is used to display control conditions present at the time the fault occurred. Input states, Output states, various voltage and current values etc. can be viewed to help understand the cause of the fault condition. See Section 5 of this manual for more information.

Diagnostics

From the Menu display screen, select Diagnostics and press enter. These are read only values. See Section 5 for a more detailed description.

Action	Description	Display	Comments
Press Menu	Displays top level menu options.	STATUS QUICK SETUP PROGRAMMING EVENT LOG DIAGNOSTICS DISPLAY OPTIONS EV. LOG BACK	Press ▲ or ▼ to move cursor over the “DIAGNOSTICS” selection. Press Enter to view diagnostic information.
Press ▶ to display next group.	DC Bus Voltage Drive Heatsink Temperature % Overload (remaining)	DIAG STOP LOCAL POWER BASE BUS VOLTAGE 333.9V DRIVE TEMP 26.1C OVERLOAD LE 100.0% EV. LOG 0.00r MAIN	Press ▶ or ◀ to go to the next or previous Diagnostic screen. Press R to return to previous menu.
Press ▶ to display next group.	Displays active operating mode settings.	DIAG STOP LOCAL OPERATING MODE Keypad Speed V/F Control EV. LOG 0.00r MAIN	
Press ▶ to display next group.	Bit display of digital inputs, outputs and the voltage present at the internal 24V supply terminals. Note: Enable input=1. Out1=1.	DIAG STOP LOCAL DIGITAL I/O INPUTS 100000000 OUTPUTS 0001 USER 24V 24.9V EV. LOG 0.00r MAIN	Press ▶ or ◀ to go to the next or previous Diagnostic screen. Press R to return to previous menu.
Press ▶ to display next group.	Output Frequency, % Feedforward % Setpoint, % Feedback	DIAG STOP LOCAL PROC CONTROL PID 0.00HZ 0.0FF 0.0SP 0.0FB EV. LOG 0.00r MAIN	Press ▶ or ◀ to go to the next or previous Diagnostic screen. Press R to return to previous menu. Note: This screen does not appear if Level 2 Process Control, Process type is set to None.

Diagnostics Continued

Action	Description	Display	Comments
Diagnostic Display	Displays software version, hp, volts and Amp/Volt ratings.	DIAG STOP LOCAL IHH–1.XX RATED HP 3HP RATED VOLTS 240.0V RATED A/V 4.0A/V EV. LOG 0.00r MAIN	Press ▶ or ◀ to go to the next or previous Diagnostic screen. Press R to return to previous menu.
Press ▶ to display next group.		DIAG STOP LOCAL IHH–1.XX RATED CURRE 9.6A RATED PK CU 16.8A EV. LOG 0.00r MAIN	Press ▶ or ◀ to go to the next or previous Diagnostic screen. Press R to return to previous menu.
Press ▶ to display next group.	Displays: Power Base ID number EE Firmware version FPGA firmware version	DIAG STOP LOCAL POWER BASE VERSION ID 0x000A2003 EE VER 0x00000001 FPGA VER 0x00000A02 EV. LOG 0.00r MAIN	Press ▶ or ◀ to go to the next or previous Diagnostic screen. Press R to return to previous menu. 0x=Hexadecimal 0b=Binary
Press ▶ to display next group.	Displays real time clock values (date and time) and total run time since installation. Press ENTER to set date and time.	DIAG STOP LOCAL REAL TIME CLOCK Jul 04, 2006 22:7:35 RUN TIMER 474.1HR EV. LOG 0.00r MAIN	Press ▶ or ◀ to go to the next or previous Diagnostic screen. Press R to return to previous menu.
Press ▶ to display next group.	Displays energy cost (based on parameter # 2305 value).	DIAG STOP LOCAL ENERGY EST POWER 0.00KW EST ENERGY 0.0KWH EST COST 0.0$ EV. LOG 0.00r MAIN	Press ▶ or ◀ to go to the next or previous Diagnostic screen. Press R to return to previous menu. Press A to go to Status screen.
Press ▶ to display next group.	Diagnostic Analog Input values display.	DIAG STOP LOCAL ANALOG INPUTS ANA IN 1 1.3v ANA IN 2 0.0v EV. LOG 0.00r MAIN	Press ▶ or ◀ to go to the next or previous Diagnostic screen. Press R to return to previous menu.
Press ▶ to display next group.	Diagnostic Analog Output values display.	DIAG STOP LOCAL ANALOG OUTPUTS ANA OUT 1 0.0V ANA OUT 2 0.0V EV. LOG 0.00r MAIN	Press ▶ or ◀ to go to the next or previous Diagnostic screen. Press R to return to previous menu.

Diagnostics Continued

Action	Description	Display	Comments
Press ▶ to display next group.	Full revolutions and encoder counts are displayed.	DIAG STOP LOCAL POSITION COUNTER REVOLUTIONS 0 COUNTS 0CNT EV. LOG 0r MAIN	Press ▶ or ◀ to go to the next or previous Diagnostic screen. Press R to return to previous menu.
Press ▶ to display next group.	Diagnostic installed Option Card identification display.	DIAG STOP LOCAL OPTION BOARDS OPTION 1 ETHERNET OPTION 2 NONE FEEDBACK NONE EV. LOG 0.00r MAIN	Press ▶ or ◀ to go to the next or previous Diagnostic screen. Press R to return to previous menu. Press A to go to Status screen.
Press ▶ to display next group.	Displays keypad software version.	DIAG STOP LOCAL KEYPAD VERSION KEYPAD SOF 1.XX 03/0 EV. LOG 0.00r MAIN	
Press ▶ to display next group.	Displays Composite Reference values.	DIAG STOP LOCAL COMPOSITE REF COMPONENT A 0.00% COMPONENT B 0.00% REFERENCE 0.00% EV. LOG 0.00r Alarm	

Display Options

From the Menu display screen, select Display Options and press enter to view or change values.

Action	Description	Display	Comments
		PROG KEYPAD SETUP KEYPAD CONTRAST 50% DIAG F1313T1 BACK	Press “Enter” to change parameter value. Press ▶ or ◀ to display next screen. Press “R” to return to previous menu.
		PROG KEYPAD SETUP BACKLIGHT On DIAG F1314T1 BACK	Press “Enter” to change parameter value. Press ▶ or ◀ to display next screen. Press “R” to return to previous menu.

Operating the Control from the Keypad

To activate the LOCAL Mode, first press the “STOP” key (if enabled).

Note: Pressing the keypad STOP key (if enabled) will automatically issue a motor stop command and change to LOCAL mode.

Selection of LOCAL Mode overrides any remote or serial control inputs except the External Trip input, Local Enable Input or STOP input.

The control can operate the motor from the keypad in two ways.

1. JOG Command.
2. Speed adjustment with Keypad entered values and/or Keypad Up/Down arrow keys.

Note: If the level 1, input block operating mode parameter is set to Keypad, then no other means of operation is permitted other than from the keypad.

Accessing the Keypad JOG Command

Action	Description	Display	Comments
Status Display		STATUS STOP LOCAL 0.0V 0RPM 0.0A 0.0HZ DIAG 0.00r MAIN	
Press JOG key Next, press and hold the FWD or REV key	The JOG LED will light indicating the JOG mode is active. Holding the FWD or REV key starts JOG operation. Releasing FWD or REV key will terminate motor rotation.	STATUS FWD LOCAL 30.9V 208RPM 1.6A 7.0HZ DIAG 20.00r MAIN	To change Jog Speed, Edit Level 1 parameter 1201 (Jog Speed). Press STOP key twice to terminate JOG mode.

Speed Adjustment using Local Speed Reference

Action	Description	Display	Comments
At the Status Display, press ENTER key to access Local Speed Reference.		EDIT LOCAL REFs LOC SPEED REF 000.0HZ MAX F0201 RESET	
		EDIT LOCAL LOC SPEED REF 000.0HZ DIAG F0201 BACK	Press ▶ or ◀ to move cursor. Press ▲ or ▼ to increase or decrease value at cursor. Press ENTER when finished and save the new value.
		EDIT LOCAL LOC SPEED REF 020.0HZ DIAG F0201 BACK	Press ▶ or ◀ to move cursor. Press ▲ or ▼ to increase or decrease value at cursor. Press ENTER when finished and save the new value.
Press FWD or REV key.	The control will turn the motor shaft at the local speed ref speed.	STATUS FWD LOCAL 79.7V 599RPM 1.5A 20.0HZ DIAG 20.00r MAIN	Press STOP key to terminate local speed mode. Press ▲ or ▼ to increase or decrease motor speed during rotation.

Table 4-1 List of Parameters (Version 1.06)

Level 1 Blocks			
Preset Speeds	**Keypad Setup**	**Output Setup**	**Communication**
PRESET SPEED 1	STOP KEY	DIGITAL OUTPUT 1	BAUD RATE
PRESET SPEED 2	STOP MODE	DIGITAL OUTPUT 2	PARITY
PRESET SPEED 3	RUN FORWARD	RELAY OUTPUT 1	STOP BITS
PRESET SPEED 4	RUN REVERSE	RELAY OUTPUT 2	DRIVE ADDRESS
PRESET SPEED 5	SWITCH ON FLY	ANALOG OUT1 SIGNAL	OPT CARD RESET
PRESET SPEED 6	LOCAL HOT START	ANALOG OUT2 SIGNAL	SECURITY DEFAULT
PRESET SPEED 7	SPEED INCREMENT	ANALOG OUT1 TYPE	BROWSER USER ID
PRESET SPEED 8	INIT LOCAL SPEED	ANALOG OUT2 TYPE	BROWSER PASSWORD
PRESET SPEED 9	SET SPEED	ANALOG OUT1 GAIN	
PRESET SPEED 10	PARAMS TO KEYPAD	ANALOG OUT2 GAIN	
PRESET SPEED 11	DOWNLOAD SELECT	ZERO SPD SET PT	
PRESET SPEED 12	KEYPAD TO PARAMS	AT SPEED BAND	
PRESET SPEED 13	KEYPAD CONTRAST	SET SPEED POINT	
PRESET SPEED 14	BACKLIGHT	OVERLOAD SET POINT	
PRESET SPEED 15	[1] LOCAL TORQUE MODE	UNDERLOAD SET POINT	
	[1] LOCAL TORQUE REF	CALIBRATE ANALOG OUT	
Ramp Rates			
ACCEL TIME 1	**Input Setup**	**Motor Control**	
START S-ACCEL 1	OPERATING MODE	CONTROL TYPE	
END S-ACCEL 1	COMMAND SOURCE	CONTROL BASE SPEED	
DECEL TIME 1	ANA IN1 TYPE	[2] CONTROL BASE VOLT	
START S-DECEL 1	ANA IN1 INVERT	[2] STATIC BOOST	
END S-DECEL 1	ANA IN1 GAIN	[2] DYNAMIC BOOST CUT IN	
ACCEL TIME 2	ANA IN1 OFFSET	[2] DYNAMIC BOOST	
START S-ACCEL 2	ANA IN1 FILTER	[2] V/F EFFICIENCY	
END S-ACCEL 2	ANA IN2 TYPE	[2] V/F PROFILE	
DECEL TIME 2	ANA IN2 INVERT	[2] 3 POINT METHOD	
START S-DECEL 2	ANA IN2 GAIN	[2] 3 POINT VOLTAGE	
END S-DECEL 2	ANA IN2 OFFSET	[2] 3 POINT FREQUENCY	
	ANA IN2 DEADBAND	[2] SLIP COMP ENABLE	
Jog Settings	ANA IN2 FILTER	[1] CURRENT PROP GAIN	
JOG SPEED	[1] EXT CURRENT LIMIT	[1] CURRENT INTEGRAL GAIN	
JOG ACCEL TIME	[1] CURRENT LIMIT SOURCE	[1] SPEED PROP GAIN	
JOG START S-ACCEL	SLEEP MODE	[1] SPEED INTEGRAL GAIN	
JOG END S-ACCEL	CMD SLEEP BAND	[1] SPEED DIFFERENTIAL GAIN	
JOG DECEL TIME	[1] TORQUE FF SOURCE	[1] A.S. PROP GAIN	
JOG START S-DECEL		[1] A.S. INTEGRAL GAIN	
JOG END S-DECEL		[1] MOTOR Xm	
JOG FORWARD		[1] MOTOR R1	
JOG REVERSE		[1] MOTOR X1	
		[1] MOTOR R2	
		[1] MOTOR X2	
		[1] ROTOR TIME CONSTANT	

[1] Only available or active in Open Loop Vector mode. Ignore these parameters for V/F mode.
[2] Only available or active in V/F mode. Ignore these parameters for Open Loop Vector mode.

Table 4-1 List of Parameters Continued

Level 2 Blocks	Level 2 Blocks		Level 2 Blocks
Drive Limits	**Miscellaneous**	**Brake Adjust**	**Skip Frequency**
OPERATING ZONE	AUTO RESTART	RESISTOR OHMS	[2] SKIP FREQ 1
MIN OUTPUT SPEED	RESTARTS/HOUR	RESISTOR WATTS	[2] SKIP BAND 1
MAX OUTPUT SPEED	RESTART DELAY	RESISTOR TTC	[2] SKIP FREQ 2
PWM FREQUENCY	PWM TECHNIQUE	[2] DC BRAKE VOLTS	[2] SKIP BAND 2
[1] CURRENT RATE LIMIT	COST OF ENERGY	[2] DC BRAKE TRIGGER	[2] SKIP FREQ 3
PEAK CURRENT LEVEL	RESET ENERGY	[2] BRAKE ON STOP	[2] SKIP BAND 3
REGEN TORQ LIMIT	FILTER TYPE	[2] BRAKE ON REVERSE	
	FILTER SOURCE	[2] STOP BRAKE TIME	**Synchro Start**
Drive Configure	FILTER DESTINATION	[2] BRAKE ON START	SYNC START FWD
SPEED UNITS	FILTER CUTOFF	[2] START BRAKE TIME	SYNC START REV
FACTORY SETTINGS	NOTCH CENTER FREQUENCY		[2] SYNC AT MAX FREQ
CLEAR FAULT LOG	NOTCH BAND	**Process Control**	SYNCHRO SCAN V/F
SECURITY		PROCESS TYPE	SYNC SETUP TIME
ACCESS TIMEOUT	**Motor Data**	SETPOINT ADJUST LIMIT	SYNC SCAN TIME
ACCESS CODE	MOTOR RATED VOLT	PROCESS FEEDBACK	SYNC RECOVER
ACTIVE PARAM TABLE	MOTOR RATED AMPS	SETPOINT SOURCE	
[2] DEAD TIME COMP	MOTOR RATED SPEED	SETPOINT COMMAND	**Auto Tune**
POWER INPUT	MOTOR RATED FREQUENCY	PROCESS ERROR TOLERANCE	ANA OFFSETS TRIM
	MOTOR MAG AMPS	PROCESS PROP GAIN	[1] ONE-STEP TUNING
Drive Protect	[2] INSTABILITY FREQUENCY	PROCESS INTG GAIN	STATOR R1 TUNE
EXTERNAL TRIP	[2] STABILITY GAIN	PROCESS INTG CLAMP	[1] MEASURE Xm
[1] FOLLOWING ERROR	ELECTRICAL SLIP FREQUENCY	PROCESS DIFF GAIN	[1] MEASURE LEAKAGE
[1] TORQUE PROVING	CALC MOTOR MODEL	PROFILE ADJUST	[1] CURRENT LOOP TUNE
[2] FOLDBACK GAIN	REVERSE MOTOR ROTATION	PROFILE ADJUST BAND	[1] FLUX CURRENT TUNE
OVERLOAD		PROCESS SLEEP BAND	
[2] OVERLOAD TRIGGER		PROCESS OUTPUT FILTER	
SINGLE PHASING		PROCESS OUTPUT OFFSET	
OVER TEMPERATURE		PROCESS OUTPUT GAIN	

Table 4-1 List of Parameters Continued

Level 3 Blocks				
Profile Run	**Custom Units**	**PLC Mode**	**Composite REF**	**RTC Features**
NUMBER OF CYCLES	MAX DECIMAL PLACES	PLC Config 1-16	Parameter A Number	RTC Action 1
PR RESTART MODE	VALUE AT SPEED	Compare A Parameter	Parameter A Function	RTC Action 2
SPEED CURVE 1-7	UNITS OF MEASURE	Compare A Constant	Parameter B Number	RTC Message 1
PROFILE TIME 1-7		Compare B Parameter	Parameter B Function	RTC Message 2
		Compare B Constant	Operator	RTC Counter MAX
		Timer A Duration	Function	DST Select
		Timer B Duration	Parameter A Gain	
			Parameter B Gain	

[1] Only available or active in Open Loop Vector mode. Ignore these parameters for V/F mode.
[2] Only available or active in V/F mode. Ignore these parameters for Open Loop Vector mode.

Parameter Definitions

Table 4-2 Level 1 Parameter Block Definitions

Block Title	Parameter	Description
PRESET SPEEDS	Preset Speeds 1 – 15	Allows selection of 15 predefined motor operating speeds. Each speed may be selected using external switches connected to terminals at J2. For motor operation, a motor direction command must be given along with a preset speed command.
RAMP RATES	Accel Time 1,2	Accel time is the number of seconds required for the motor to increase at a linear rate from 0 to "Max Output Speed" parameter in the Level 2 Output Limits block.
	Decel Time 1,2	Decel time is the number of seconds required for the motor to decrease at a linear rate from the speed specified in the "Max Output Speed" parameter to 0.
	Start S-Accel 1,2	Start S-Curve Acceleration as a percentage of max speed (% 1 and 2)
	End S-Accel 1,2	End S-Curve Acceleration as a percentage of max speed (% 1 and 2)
	Start S-Decel 1,2	Start S-Curve Deceleration as a percentage of max speed (% 1 and 2)
	End S-Decel 1,2	End S-Curve Deceleration as a percentage of max speed (% 1 and 2)

Figure 4-2 S–Curve Example

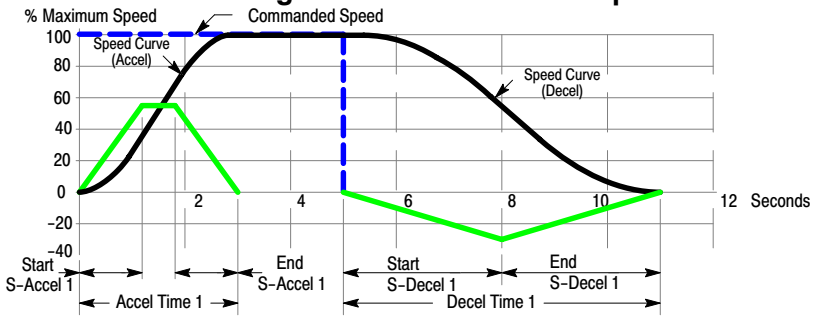

Table 4-2 Level 1 Parameter Block Definitions - Continued

Block Title	Parameter	Description
JOG SETTINGS	Jog Speed	Jog Speed is the programmed speed used during jog. Jog can be initiated from the keypad or terminal strip. At the Keypad, press the JOG key then press and hold the direction (FWD or REV). For Standard Run 3Wire mode, close the JOG input (J2–12) at the terminal strip then close and maintain the direction input (J2–9 or J2–10). Process Control mode operation is different. If the terminal strip Process Control Enable input (J2–13) is closed, pressing the Keypad JOG key (or closing J2–14) will cause the drive to move in the direction of the error (without pressing FWD or REV).
	Jog Accel Time	The accel rate or time to reach Jog Speed. Time=(Jog Speed/Max Speed) x (Jog Accel Time)
	Jog Decel Time	The decel rate or time to decel from Jog Speed. Time=(Jog Speed/Max Speed) x (Jog Decel Time)
	Jog Start S-Accel	Start S-Curve Acceleration as a percentage of max speed (% 1 and 2)
	Jog End S-Accel	End S-Curve Acceleration as a percentage of max speed (% 1 and 2)
	Jog Start S-Decel	Start S-Curve Deceleration as a percentage of max speed (% 1 and 2)
	Jog End S-Decel	End S-Curve Deceleration as a percentage of max speed (% 1 and 2)
	Jog Forward	Enables Jog in the drive forward direction at Jog speed for keypad mode.
	Jog Reverse	Enables Jog in the drive reverse direction at Jog speed for keypad mode.

Table 4-2 Level 1 Parameter Block Definitions - Continued

Block Title	Parameter	Description
KEYPAD SETUP	Stop Key	OFF Keypad STOP key is not active. ON Allows keypad STOP key to initiate motor stop during remote or serial operation. If active, pressing STOP selects Local mode and initiates the stop command.
	Stop Mode	Selects if the Stop command causes the motor to COAST to a stop or REGEN to a stop. In COAST, the motor is turned off and allowed to coast to a stop. In REGEN, the voltage and frequency to the motor is reduced at a rate set by Decel Time.
	Run Forward	OFF disables FWD key in Local mode. ON makes the keypad FWD key active in Local mode.
	Run Reverse	OFF disables REV key in Local mode. ON makes the keypad REV key active in Local mode.
	Switch on Fly	OFF disables Switch on Fly. ON Allows switching between Local and Remote while Control is on.
	Local Hot Start	OFF disables the Stop input at J2-11 in the keypad operating mode. ON enables the Stop input at J2-11 in the keypad operating mode.
	Speed Increment	Sets the increment of speed change for each key press. (1-60Hz)
	INIT Local Speed	At power up, initializes the local speed to 0RPM, the last speed before power down or at Set Speed parameter.
	Set Speed	Optional, at power up, initializes the local speed to this preset value.
	Params to Keypad	Transfers the parameter settings stored in the control memory (flash) to keypad memory.
	Download Select	Selects parameters to download (All, Motor or Other) with the Keypad to Params #1312 parameter. All=All parameters, Motor=Motor parameters only, Other=All parameters except Motor parameters.
	Keypad to Params	Transfers the parameter settings stored in keypad memory to the control memory (flash).
	Keypad Contrast	Sets LCD contrast: 0=dimmest, 100=brightest.
	Backlight	Turns On/Off the backlight for the keypad display.
(Open Vector Only)	Local Torque Mode	OFF disables local torque mode. ON enables local torque mode operation.
	Local Torque Ref	Local torque mode reference value.

Table 4-2 Level 1 Parameter Block Definitions - Continued

Block Title	Parameter	Description
INPUT SETUP	Operating Mode	Operating Modes are: Keypad, Standard Run 2 and 3 wire, 15 Preset Speeds, Fan&Pump 2 and 3 Wire, Process Control, 3 SPD ANA 2 and 3 Wire, E-POT 2 and 3 Wire, Bipolar, Network, Profile Run and PLC. External connections to the control are made at the control terminal strip (wiring diagrams are shown in Section 3 "Operating Modes").
	Command Source	Selects the external speed reference to be used. None, Command Source is not used. Analog In1, Connect a 10KΩ pot at J1 or connect a 0-10VDC signal to J1-2 and J1-1. Analog In2, Connect a 0-5V, 0-10V, ±5V, ±10V, 0-20mA or 4-20mA source to J1-4 and 5. 4-20mA should be considered when a long distance (up to 50 ft) between the external device and J1-4 and 5 of the control is necessary. Keypad, Command is from Keypad. Network, Signal source is from a device on the network. Composite, the result of the Level 3 Composite Reference set by the user. OPT1 ANA IN1, Option board 1 Analog Input 1 is used as signal source. OPT1 ANA IN2, Option board 1 Analog Input 2 is used as signal source. OPT2 ANA IN1, Option board 2 Analog Input 1 is used as signal source. OPT2 ANA IN2, Option board 2 Analog Input 2 is used as signal source.
	ANA IN 1 TYPE	None, input not used. Potentiometer (0-10V signal is used).
	ANA IN 1 INVERT	Off - will cause a low input voltage (e.g. 0VDC) to be a low motor speed command and a maximum input voltage (e.g. 10VDC) to be a maximum motor speed command. On - will cause a low input voltage (e.g. 0VDC) to be a maximum motor speed command and a maximum input voltage (e.g. 10VDC) to be a low motor speed command.
	ANA IN 1 GAIN	Allows 0 to 300% gain to be applied (as in Y=Gain*(X-Offset)).
	ANA IN 1 OFFSET	Provides an offset to the Analog Input to minimize signal drift. For example, if the minimum speed signal is 1VDC (instead of 0VDC) the ANA CMD Offset can be set to -10% so the minimum voltage input is seen by the control as 0VDC. This parameter is automatically adjusted during the auto tune CMD Offset Trim test.
	ANA IN 1 FILTER	Amount of signal filtering to use, 0=No filtering, 6= Max filtering. Note: Factory setting is 0. If a different value is chosen, the Level 2 Miscellaneous filter must be off. Do not select both filters at same time.
	ANA IN 2 TYPE	Define signal to be used, ±5V, ±10V, 0-20mA, 4-20mA, 0-5V or 0-10V.
	ANA IN 2 INVERT	Off - will cause a low input voltage (e.g. 0VDC) to be a low motor speed command and a maximum input voltage (e.g. 10VDC) to be a maximum motor speed command. On - will cause a low input voltage (e.g. 0VDC) to be a maximum motor speed command and a maximum input voltage (e.g. 10VDC) to be a low motor speed command.
	ANA IN 2 GAIN	Allows 0 to 300% gain to be applied (as in Y=Gain*(X-offset)).
	ANA IN 2 OFFSET	Provides an offset to the Analog Input to minimize signal drift. For example, if the minimum speed signal is 1VDC (instead of 0VDC) the ANA CMD Offset can be set to -10% so the minimum voltage input is seen by the control as 0VDC. This parameter is automatically adjusted during the auto tune CMD Offset Trim test.
	ANA IN 2 DEADBAND	Allows a defined range of voltage to be a deadband. A command signal within this range will not affect the control output. The deadband value is the voltage above and below the zero command signal level.
	ANA IN 2 FILTER	Amount of signal filtering to use, 0=No filtering, 6= Max filtering. Note: Factory setting is 0. If a different value is chosen, the Level 2 Miscellaneous filter must be off. Do not select both filters at same time.
	Sleep Mode	Disables the control when Command Source is less than CMD Sleep Band (parameter #1417). Active in all speed modes.
	CMD Sleep Band	Sets the speed command limit for sleep mode. 0.00% disables Sleep Mode.
(Open Vector Only)	External Current Limit	Off - Disables external current limit. On - Allows current limit source input (#1415) to set current limit in speed mode.
	Current Limit Source	Source for external current limiting. None - Turns off external current limit. Analog In1, Connect a 10KΩ pot at J1 or connect a 0-10VDC signal to J1-2 and J1-1. Analog In2, Connect a 0-5V, 0-10V, ±5V, ±10V, 0-20mA or 4-20mA source to J1-4 and 5. 4-20mA should be considered when a long distance (up to 50 ft) between the external device and J1-4 and 5 of the control is necessary. Keypad, Turns off external current limit. Composite, see section 8 for more information.
	Torque FF Source	Source for FeedForward Torque input. Same input source selection as Current Limit Source.

Table 4-2 Level 1 Parameter Block Definitions - Continued

Block Title	Parameter	Description
OUTPUT SETUP	Digital Output 1,2 Relay Output 1,2	Four digital outputs are available (2 optically isolated and 2 relay). Each output may be configured to any of the following conditions: **Condition** — **Description** Drive Ready - Active after soft start, when drive is enabled and no faults are present. Drive On - (V/F) Active when drive is "Ready" and producing PWM to motor. (Open Vector) Active when drive is "Ready" and motor flux is present. Drive Run - Active when drive is "On" and a FWD/REV direction command is present. Drive Stopped - Active when stop command is present and motor is stopped (or coasting to stop). Jog - Active during Jog mode. Accelerate - Active when control is accelerating. Constant Speed - Active when control speed is constant. Decelerate - Active when control is decelerating. At Zero Speed - Active when motor speed is less than the Level 1 Output Setup "Zero SPD Set Pt". At Speed - Active when motor speed is within band set by the Level 1 Output Setup "At Speed Band (P1506)". At Set Speed - Active when output speed is at or greater than the Level 1 Output Setup "Set Speed Point (P1507)". Current Overload - Active when motor current is greater than "Overload Set Point". Current Underload - Active when motor current is less than "Underload Set Point". I^2T Overload - Active when overload left is less than 100%. Keypad Control - Active when control is in Local keypad control. Dynamic Brake - Active when Dynamic Brake transistor is turned ON. Foldback - Active when current foldback is active. Fault - Active when a fault condition is present (will cause trip). Alarm - Active when an Alarm condition is present (but doesn't cause trip). Command Forward - Active during forward run command. Command Reverse - Active during reverse run command. Motor Forward - Active when motor is moving in Drive forward direction. Motor Reverse - Active when motor is moving in Drive reverse direction. Process Error - Active when absolute process error is greater than P2606 (Process Error Tolerance). Network – Active when commanded by network (Modbus). Network device controls this output. PLC – Output is controlled by PLC mode. RTC – Output is controlled by RTC mode.
	Zero SPD Set PT	Zero speed opto output is active when the speed is less than the ZERO SPD SET PT, the opto output becomes active. This is useful when a motor brake is to interlock operation with a motor.
	At Speed Band	At Speed opto output is active when the magnitude of (Speed Ref)–(Speed Demand) is less than P1506.
	Set Speed Point	Sets the speed that the AT Set Speed digital output becomes active (turns on). When the speed is greater than the Level 1 Output SET SPEED parameter, the digital output becomes active. This is useful when another machine must not start or stop until the motor exceeds a predetermined speed.
	Overload Set Point	Sets the motor current value at which the Overload digital output is active.
	Underload Set Point	Sets the motor current value at which the Underload digital output is active.

Table 4-2 Level 1 Parameter Block Definitions - Continued

Block Title	Parameter	Description	
OUTPUT SETUP Continued	Analog Out 1, 2 Signal Source Selection	Speed Ref -	Scaled value of speed reference input to velocity profiler (ACC/DEC ramp).
		Speed Demand -	Scaled value of speed reference output of velocity profiler (ACC/DEC ramp).
		Acc/Dec -	Scaled value of ACC/DEC rate, range is from 0 to max ACC/DEC rate.
		Motor Current -	Scaled value of Motor Current, range is based on 2 times drive FLA. (Includes both mag and load currents).
		MAG Current -	Scaled value of magnetizing current, range is based on 2 times drive FLA.
		MAG Current Command -	The commanded D-axis PI vector magnetizing current to the current controller, range is based on 2 times drive FLA.
		Load Current -	Scaled value of the load amps, range is based on 2 times drive FLA.
		Load Current Command -	The commanded Q-axis PI vector load current to the current controller, range is based on 2 times drive FLA.
		Power Factor-	Scaled value of power factor, range is from 0 to 1.0.
		PH1 Current -	Scaled value of the phase 1 motor current, range is based on 2 times drive FLA.
		PH2 Current -	Scaled value of the phase 2 motor current, range is based on 2 times drive FLA.
		PH3 Current -	Scaled value of the phase 3 motor current, range is based on 2 times drive FLA.
		Motor Voltage -	Scaled value of the motor voltage, range is based on P2401.
		VD Demand -	Flux controller output. Used to diagnose control problems.
		VQ Demand -	Load controller output. Used to diagnose control problems.
		Bus Voltage -	Scaled value of the Bus voltage. (Range is based on 325V for 240V drives, 650V for 480V controls and 813Vdc for 600V controls.)
		ABS Torque -	Scaled value of the absolute torque, range is based on peak torque (2 x rated torque).
		Torque -	Scaled value of the motor torque (signed), range is based on peak torque (2 x rated torque).
		Control Temp -	Scaled value of the control heatsink temperature, range is -50 to 150C.
		Analog Input 1 -	Scaled value of the analog input 1 signal value.
		Analog Input 2 -	Scaled value of the analog input 2 signal value, range depends on input type P1408.
		OPT1 ANA IN1 -	Scaled value of option board 1 analog input 1 signal value, range depends on input type selected.
		OPT1 ANA IN2 -	Scaled value of option board 1 analog input 2 signal value, range depends on input type selected.
		OPT2 ANA IN1 -	Scaled value of option board 2 analog input 1 signal value, range depends on input type selected.
		OPT2 ANA IN2 -	Scaled value of option board 2 analog input 2 signal value, range depends on input type selected.
		PROC Feedforward -	Scaled value of the process feedforward signal, range is -100% to 100% of Process Feedforward signal.
		PROC Feedback -	Scaled value of the process feedback signal, range is -100% to 100% of Process Feedback signal.
		PROC Setpoint -	Scaled value of the process setpoint source, range is -100% to 100% of Process Setpoint signal.
		Electric Angle -	Scaled value of the electrical angle of shaft, range is from 0-359 degrees.
		ABS Speed -	Scaled value (absolute) of actual motor speed, range is 0 to Max Motor Speed P2003.
		Velocity -	Scaled value (signed) of actual motor speed, range is - Max Motor Speed to +Max Motor Speed P2003.
		Network -	Represents the network speed reference, see MN744. Analog 1 holding register is 40102:40101 Analog 2 holding register is 40104:40103
		Composite Ref -	Scaled value of the Composite Reference output, range is -100% to 100% of composite reference calculation.
		Calibrate -	Produces maximum value of selected analog output type.
	Analog Out 1 Type	Sets the output signal (0-5V, 0-10V, 4-20mA or 0-20mA).	
	Analog Out 2 Type	Sets the output signal (±5V, ±10V).	
	Analog Out #1 & 2 Gain	Scale factor for analog output (as in Y=Gain*X).	
	Calibrate Analog Out	Scalable output signal used to calibrate output device (-100% to 100% of Analog Out 1 Type).	

Note: * Example Speed output: Bipolar output range is −MAX Speed to +Max Speed. Unipolar output range is 0 to MAX Speed. Bipolar parameter with unipolar output, 0V=(−MAX) to max output = (+MAX).

Table 4-2 Level 1 Parameter Block Definitions - Continued

Block Title	Parameter	Description
MOTOR CONTROL (All)	Control Type	Sets the control type to V/F Control or Open Vector .
	Control Base Speed	The speed at which Field Weakening begins. Typically set to motor rated speed.
(V/F Only)	Control Base Volt	Voltage that represents base speed. Typically set to motor rated speed.
	Static Boost	Additional voltage applied to motor at start-up.
	Dynamic Boost Cut In	Speed at which dynamic boost takes full effect.
	Dynamic Boost	The Dynamic Boost parameter can be adjusted to provide more or less running torque from the motor than is available with the factory setting. The boost adjustment alters the output voltage to the motor from the normal voltage value by increasing or decreasing the voltage per frequency unit as defined by the V/F profile.
	V/F Efficiency	Smooths transitions between static boost and V/F curve.
	V/F Profile	Sets the Volts/Frequency ratio of the control output (to the motor) for all values of output voltage versus output frequency up to the control base frequency. Because motor voltage is related to motor current, motor voltage can then be related to motor torque. A change in the V/F profile can adjust how much torque is available from the motor at various speeds. 3PT profile – allows two linear V/F segments by setting the V/F 3PT Volts and V/F 3PT Frequency parameters, see Figure 4-3.
	3 Point Method	0=Linear, 100=Quadratic
	3 Point Voltage	The output voltage associated with the 3PT Frequency parameter.
	3 Point Frequency	The output frequency associated with the 3PT Volts parameter.
	Slip Comp Enable	Compensates for varying load conditions during normal operation to maintain constant rotor speed.
(Open Vector Only)*	Current PROP Gain	Sets the current loop proportional gain.
	Current INT Gain	Sets the current loop integral gain.
	Speed PROP Gain	Sets the speed (velocity) loop proportional gain. Excessive speed prop gain will cause ringing around the set point. Decreasing the speed prop gain will result in slower response and decrease the ringing, but will increase the overshoot.
	Speed INT Gain	Sets the speed (velocity) loop integral gain.
	Speed DIFF Gain	Sets the speed (velocity) loop differential gain.
	A.S. Prop Gain	Sets the anti-saturation proportional gain.
	A.S. Integral Gain	Sets the anti-saturation integral gain.
	Motor XM	Sets the Motor magnetizing reactance value.
	Motor R1	Sets the Motor stator resistance value.
	Motor X1	Sets the Motor stator leakage reactance value.
	Motor R2	Sets the Motor rotor resistance value.
	Motor X2	Sets the Motor rotor reactance value.
	Rotor Time Constant	Sets the rotor time constant value.
COMMUNICATION	Baud Rate	Sets the communication baud rate.
	Parity	Sets communication parity.
	Stop Bits	Sets the number of stop bits to use.
	Drive Address	Sets the drive address for communication.
	OPT Card Reset	Sends a power up reset command to all expansion boards, slot 1 only, or slot 2 only.
	Security Default	Restores factory settings to Browser User ID and Password.
	Browser User ID	ASCII user ID for the Ethernet Web Browser Option Board if installed.
	Browser Password	Password for the Ethernet Web Browser Option Board if installed.

Note: Refer to MN751 for more details about the optional WebBrowser board and parameters.

* These values are set during auto tuning. Performance may be affected if the value of these parameters is changed after auto tuning.

Figure 4-3 Volts/Hertz Profile

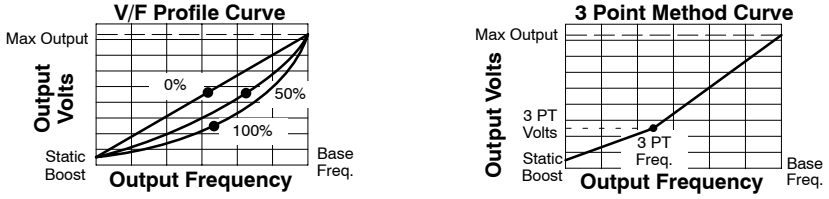

Table 4-3 Level 2 Parameter Block Definitions

Block Title	Parameter	Description
DRIVE LIMITS	Operating Zone	Sets the PWM operating zone to Standard 2.5kHz or Quiet 8.0kHz output carrier frequency. Two operating modes are available: Constant Torque and Variable Torque. Constant Torque allows 175% for 3 seconds and 150% for 60 seconds of peak overload capacity. Variable Torque allows 115% peak overload for 60 seconds.
	MIN Output Speed	Sets the minimum motor speed in Hz. During operation, the motor speed will not decrease below this value except for motor starts or during dynamic braking to a stop.
	MAX Output Speed	Sets the maximum motor speed in Hz.
	PWM Frequency	The frequency that the output transistors are switched. PWM (pulse width modulation) frequency is also referred to as "Carrier" frequency. PWM should be as low as possible to minimize stress on the output transistors and motor windings. The PWM frequency should be set to approximately 15 times the maximum output frequency of the control. Ratios less than 15 result in non-Sinusoidal current waveforms. Note: Derate output current by 30% for operation between 8.5KHz and 16KHz.
	REGEN Torque Limit	Sets the maximum motor current (not including MAG current) allowed during regen.
	Peak Current Level	(V/F) Sets the motor current (including MAG current) where foldback begins. (Vector) Sets maximum motor current level for operation.
(Open Vector Only)	Current Rate Limit	Limits the rate of torque change in response to a torque command.

Caution: Do not set Level 2, Drive Configure, Power Input parameter to Common Bus if AC power is connected to L1, L2 or L3. Common Bus requires numerous changes, contact Baldor for information.

Block Title	Parameter	Description
DRIVE CONFIGURE	Speed Units	Sets units to Hz or RPM.
	Factory Settings	Restores factory settings (over writes all stored values) for all four parameter tables.
	Security	Enable security.
	Access Timeout	If security is enabled and program mode is entered, the access code must be correctly entered. After parameters are changed this timer begins to timeout. If program mode is accessed after timeout, the security code must be entered a second time.
	Access Code	Sets security code for login required to access locked parameters.
	Active Parameter Table	Selects parameter table for use (T1, T2, T3 or T4). Note: This parameter is not actually in the Level 2 Blocks. It is Parameter 0052 in the Monitor block if accessing using Mint.
	Clear Fault Log	Deletes all fault log entries.
	Dead Time Compensation	(V/F only) Compensates for voltage loss due to switching dead time at the PWM output.
	Power Input	The Power base senses the control power base (single or three phase). If connecting a three phase control to a single phase power source, change value from 3 to 0 to avoid "Loss of Phase" trips. 0–Single Phase – The output values are derated for single phase operation. Note: For three phase power input, if a phase is lost this parameter will automatically be changed to single phase and the control will automatically be derated for single phase operation. 1–Common bus is selected for special installations that only have DC input power available. It is important not to choose this setting if AC power is connected. Common bus setting disables precharge and soft start features of the control. 2–Three Phase – Allows operation at full rated output current.
DRIVE PROTECT	External Trip	OFF - External Trip is Disabled. ON - External Trip is enabled. If a normally closed contact at J2–16 is opened, an External Trip fault will occur and cause the drive to shut down.
	Overload	Sets how the control handles I^2T power overloads. When an overload occurs it will either 1. Fault, 2. Foldback or 3. Hold based on control output AMPS.
	Single Phasing (3 phase units only)	Fault – When input power phase is lost for approximately 10 cycles, control trips on fault. Derate – When an input power phase is lost, single phase operation is assumed and control output is derated by 50% and operation is allowed at the reduced output.
	Over Temperature	Fault – When control temperature reaches 85°C, control trips on fault. Derate – When control temperature reaches 80°C (standard or 90°C quiet mode), output is derated by 30% (current limiting) and operation is allowed at the reduced value. Operation at full current is allowed when control temperature decreases to 70°C. If control temperature increases to 85°C, control trips on fault.
(V/F Only)	Foldback Gain	Sets the change in frequency during overcurrent conditions.
	Overload Trigger	Sets the trigger point for an overload condition.
(Open Vector Only)	Following Error	OFF - Control ignores "At Speed Error" from the process. ON - Control monitors the following error from the process. If the process speed is outside the range set in the Level 1 Output block, AT Speed Band parameter, the drive will fault and will disable.
	Torque Proving	OFF - Control ignores unbalanced motor phases. ON - Control looks for balanced output current in all three phases to the motor. Unbalanced output current will cause a trip and create a torque proving fault. This occurs only at first drive enable after power up.

Table 4-3 Level 2 Parameter Block Definitions Continued

Block Title	Parameter	Description
MISCELLAN-EOUS	Auto Restart	**Manual** Power Up Start – If set to MAN and a run command (enable line & FWD or REV command) is present at power up, the motor will not run. The run command must be removed then reapplied to start operation. The run command refers to the enable plus direction (FWD or REV) lines. Restart after Fault – If a fault occurs during operation, the control must be reset[1] and the run command must be removed then reapplied to start operation. [1] Note: If Restart Fault/Hr. is zero, the control must be manually reset. If Restart Fault/Hr. is non–zero, the control will automatically attempt to reset the fault but will not restart until the run command is removed then reapplied to start operation. **Automatic** **At Power Up** – If a run command (enable line & FWD or REV command) is present at power up, the control will automatically start. Auto restarts enabled at power up but disabled after a fault. **After Fault** – If a fault occurs during operation, the control will automatically reset (after the restart delay time) to resume operation if the Fault/Hr is set to a non zero value. Auto restarts disabled at power up but enabled after a fault. **Both** – Auto restarts active at power up and after faults. 3 Wire modes, AUTO start after a fault or loss of power will not occur because the momentary contacts are open and the run command must again be applied. The run command refers to the enable plus direction (FWD or REV) lines.
	Restarts/Hr	The maximum number of automatic restart attempts before requiring a manual restart. After one hour without reaching the maximum number of faults or if power is turned off and on again, the fault count is reset to zero.
	Restart Delay	The amount of time allowed after a fault condition for an automatic restart to occur. Useful to allow sufficient time to clear a fault condition before restart is attempted.
	PWM Technique	Sets the method used to generate the motor voltage PWM signal, Space Vector or Sine Triangle.
	Cost of Energy	Sets the cost per KWatt Hour charged by the power utility for electricity.
	Reset Energy	Resets the energy counter in the power base.
	Filter Type	Sets the auxiliary filter to None, Low pass, High Pass or Notch.
	Filter Source	Sets the auxiliary filter source to None, Raw speed, Torque, Analog IN1 or Analog IN2, or Composite.
	Filter Destination	Sets the output of the filter to None, Speed Loop, Torque Loop, Speed Feedforward, Process Feedback, Process Feedforward, or Process Setpoint.
	Filter Cutoff	Sets the cutoff frequency of the auxiliary filter. (A smaller value = slower response).
	Notch Center Frequency	Sets the center frequency for the notch filter (if Filter Type=Notch).
	Notch Band	Sets the frequency band of the notch filter (if Filter Type=Notch).
MOTOR DATA	Motor Rated Volt	The rated voltage of the motor (listed on the motor nameplate).
	Motor Rated Amps	The rated current of the motor (listed on the motor nameplate). If the motor current exceeds this value for a period of time, a Motor Overload fault will occur.
	Motor Rated Speed	The rated speed of the motor (listed on the motor nameplate). If Motor Rated SPD = 1750 RPM and Motor Rated Freq = 60 Hz, the Keypad Display will show 1750 RPM at 60 Hz and 875 RPM at 30Hz at full load.
	Motor Rated Frequency	The rated frequency of the motor (listed on the motor nameplate).
	Motor Mag Amps	The motor magnetizing current value (listed on the motor nameplate) also called no load current. Measure using a clamp on amp meter at the AC power line while the motor is running at line frequency with no load connected to the motor shaft.
	Calculate Motor Model	NO - No presets are calculated. YES - This procedure loads preset values into memory that are required to perform auto tune. Always run Calculate Motor Model as the first step of auto tune.
	Reverse Rotation	Reverse direction of motor rotation without rewiring the motor.
(V/F Only)	Instability Frequency	If the motor exhibits instability (usually no load) this parameter should be set to the center of the instability band.
	Stability Gain	Sets the amount of correction to stabilize the motor.
(Open Vector Only)	Electrical Slip Frequency	Sets the rated slip frequency of the motor.

Table 4-3 Level 2 Parameter Block Definitions Continued

Block Title	Parameter	Description
BRAKE ADJUST	Resistor Ohms	The dynamic braking resistor value in ohms. Refer to dynamic braking manual for additional information.
	Resistor Watts	The dynamic braking resistor watts rating.
	Resistor Thermal Time Constant	Sets the time for heat dissipation for the dynamic braking resistor. If 2X watts is dissipated continuously "Regen R Fault" will occur in the time set by this parameter. If 3x watts is dissipated continuously, "Regen R Fault" will occur in 1/2 the time set by this parameter.
(V/F Only)	DC Brake Volts	The amount of DC braking voltage applied to the motor windings during a stop command. Increase this value for more braking torque during stops. The increased braking voltage may cause the motor to overheat for applications that require frequent starts/stops. Be careful in selecting this value. The maximum DC Brake Voltage = (1.414)X(Max Output Volts).
	DC Brake Trigger	The frequency at which DC injection braking will begin.
	Brake On Stop	If set to ON, DC injection braking will begin when a stop command is issued. After a stop command, the DC brake voltage will be applied to the motor windings when the output frequency reaches the DC brake trigger.
	Brake On Reverse	If set to ON, DC injection braking will begin after a change-motor-rotation command is issued. After a stop command, the DC brake voltage will be applied to the motor windings when the output frequency reaches the DC brake trigger. Braking continues until the motor is stopped. The motor will then accelerate in the opposite direction.
	Stop Brake Time	The maximum number of seconds that DC injection brake voltage will be applied to the motor windings after a stop command. After the time specified by this value, DC injection braking is automatically turned off. If DC injection braking starts at a frequency less than the DC brake trigger parameter, the stop brake time is calculated as follows: $\text{Brake Time} = \text{Stop Brake Time X} \frac{\text{Output Frequency at Braking}}{\text{DC Brake Trigger}}$
	Brake on Start	If set to ON, turns DC injection braking ON for a period of time (Start Brake Time) when a run command is issued. This ensures the motor is not rotating. Braking will automatically turn off and the motor will accelerate at the end of the start brake time.
	Start Brake Time	The amount of time that DC injection braking will be applied after a run command is issued. This will only occur if brake on start is set to ON. Braking may cause the motor to overheat for applications that require frequent starts/stops. Be careful in selecting this value. The start brake time should be just long enough to ensure the motor shaft is not rotating when a start command is issued.
PROCESS CONTROL	Process Type	Sets the type of PID control. None – PID is disabled, however feedforward is always available. Forward Acting – The process error computed as, PE = (Set Point) – (Feedback). Useful when feedback increases as motor speed increases. Reverse Acting – The process error compute as, PE =(Feedback) – (Set Point). Useful when feedback decreases as motor speed increases.
	Setpoint Adjust Limit	Set as a percent of motor speed it limits speed corrections due to process error.
	Process Feedback	Sets the type of signal used for the process feedback signal.
	Setpoint Source	Sets the source input signal type to which the process feedback will be compared. If "Setpoint CMD" is selected, the fixed value of the set point is entered in the Setpoint Command, #2605.
	Setpoint Command	Sets the value, as a percentage of the process feedback signal, the control will try to maintain by adjusting motor speed. This is only used when the Setpoint Source is a fixed value "Setpoint CMD" under Setpoint Source.
	Process Error Tolerance	The operating band within which the Opto or Relay Output is active (turned ON) indicating the process is within the desired range.
	Process PROP Gain	Sets the PID loop proportional gain. Determines how much adjustment to motor speed is due to process error.
	Process INTG Gain	Sets the PID loop Integral gain. Determines how quickly the motor speed is adjusted to correct long term error.
	Process INTG Clamp	Sets the level of the Integrator clamp as a percentage of maximum motor speed.
	Process DIFF Gain	Sets the PID loop differential gain. This determines how much adjustment to motor speed is made for transient error.
	Profile Adjust	ON – Selects ACC/DEC 1 or 2 based on process error (P2612). OFF – No adjustment is made.
	Profile Adjust Band	Active when P2612 is ON. If process error is within this band, ACC/DEC Group 1 is used. If process error is outside this band, ACC/DEC 2 is used. Useful when the PID's response needs to differ when process error is small as compared to when it is large.
	Process Sleep Band	Non-zero – Enables process PID sleep mode. When Process error remains within this band for 5 seconds, sleep mode is active (control is disabled, motor coasts). If at any time the process error moves out of this band, sleep mode is terminated and normal PID operation is resumed. Zero – disables sleep mode.
	Process Output Filter	Sets the amount of filtering for the PID process output.
	Process Output Offset	Sets the amount of offset for the PID process output.
	Process Output Gain	Sets the amount of gain for the PID process output.

Table 4-3 Level 2 Parameter Block Definitions Continued

Block Title	Parameter	Description
SKIP FREQUENCY (V/F Only)	Skip Freq 1, 2, 3	The center frequency of the frequency band to skip or treat as a dead-band. Three bands can be defined independently or the three values can be selected to skip one wide frequency band.
	Skip Band 1, 2, 3	The width of the band centered about the Skip Frequency. For example, if Skip Frequency #1 is set to 20Hz and Skip Band #1 is set to 5Hz, continuous operation is not allowed in the dead-band of 15Hz to 25Hz.
SYNCHRO START	Sync Start FWD	Allows the Synchro Start feature to begin scanning motor rotational frequency in the drive forward direction.
	Sync Start REV	Allows the Synchro Start feature to begin scanning motor rotational frequency in the drive reverse direction.
	Synchro Scan V/F	Sets the Volts/Hertz ratio for the Synchro Start feature as a percentage of the V/F ratio defined by the "Control Base Volts/Control Base Frequency". This Sync Scan V/F percentage value is multiplied by the "Control Base Volts/Control Base Frequency" value. If this value is too high, the inverter may fault on Over-current.
	Sync Setup Time	The time for the inverter to ramp the output voltage from zero to the voltage that corresponds to the Start at MAX Frequency. A 0.5 second delay before the ramp begins is not included in this time. If the Start feature is not operating quickly enough, decrease the Sync Setup Time value.
	Sync Scan Time	The time allowed for Synchro Start to scan and detect rotor frequency. Scanning begins at the Start at MAX Frequency to 0Hz. Generally, the shorter the Sync Scan Time the more likely a false Synchro Start will be detected. This value should be set high enough to eliminate false Synchro Starts.
	Sync Recover Time	The time allowed to ramp up the output voltage from the Synchro Start scan voltage to the normal output voltage. This occurs after the synchronization frequency is detected. This parameter value should be low enough to minimize Synchro Start time without causing the inverter to fault on Over-current.
		Note: For open vector, set all time parameters to minimum as a starting point.
(V/F Only)	Sync at MAX Frequency	Allows the Synchro Start feature to begin scanning motor rotational frequency at the MAX Frequency (On) or at the last speed reference command (Off).
AUTO-TUNE	Analog Offset Trim	Measure analog offset for all analog inputs.
	Stator R1 Tune	Measure Stator resistance.
(Open Vector Only)	One-Step Tuning	Perform one step auto tune.
	Measure Xm (ROT)	Measure MAG Reactance.
	Measure Leakage	Measure leakage reactance and rotor resistance.
	Current Loop Tune	Tune the current controller loop.
	Flux CUR Tune	Tune the flux controller loop.

Table 4-4 Level 3 Parameter Block Definitions

Block Title	Parameter	Description
PROFILE RUN	Number of Cycles	Sets the number of cycles that the profile will automatically run before stopping.
	PR Restart Mode	Sets the restart mode if Profile Run is interrupted. 0=Restart, 1=Continue.
	Speed Curve 1-7	Speed for each curve is set by the value of Preset Speed1 (Speed Curve 1) to Preset Speed7 (Speed Curve 7). Sets the speed curve direction for the profile (value is 0-3). 0=FWD-ACC/DEC Group1 1=REV-ACC/DEC Group1 2=FWD-ACC/DEC Group2 3=REV-ACC/DEC Group2
	Profile Time 1-7	Sets the amount of time Profile Run stays at a preset speed. Time starts when speed is within the At Speed Band P1506. Acc/Dec times are not included. A setting of zero causes an immediate transition to the next speed segment after the current segment is within the speed band.
CUSTOM UNITS	MAX Decimal Places	The number of decimal places for the Custom Units display.
	Value At Speed	Sets the desired output rate per RPM of motor speed for the Custom Units display. This parameter provides scaling.
	Units of Measure	Allows user specified units of measure to be displayed for the Custom Units display. Characters are selected from display using ◀▶ and ▲ keys. More characters are available (press MORE "A" on keypad) for additional characters.
PLC MODE	PLC Config 1-16 Compare A Parameter Compare A Constant Compare B Parameter Compare B Constant	Refer to Section 7 of this manual for a description of these parameters.
COMPOSITE REF	Parameter A Number Parameter B Number Parameter A Function Parameter B Function Function Operator Parameter A Gain Parameter B Gain	Refer to Section 8 of this manual for a description of these parameters.
RTC FEATURES	RTC ACTION 1-2 RTC MESSAGE 1-2 ACTION 1-2 QUALIFIER MESSAGE 1-2 QUALIFIER ACTION 1-2 DATE/TIME MESSAGE 1-2 DATE/TIME RTC COUNTER MAX DST SELECT	Refer to Section 9 of this manual for a description of these parameters.

Section 5
Troubleshooting

The Baldor Control requires very little maintenance and should provide years of trouble free operation when installed and applied correctly. Occasional visual inspection and cleaning should be considered to ensure tight wiring connections and to remove dust, dirt, or foreign debris which can reduce heat dissipation.

Operational failures or warnings called “Faults” are displayed on the keypad display as they occur. A log of these faults and the time each occurred is kept in the Event Log. Explanation of the Event log and diagnostic information is provided later in this section. A trace log for each event stored in the fault log is also kept for analysis. Troubleshooting information is provided in table format with corrective actions later in this section.

Before attempting to service this equipment, all input power must be removed from the control to avoid the possibility of electrical shock. The servicing of this equipment should be handled by a qualified electrical service technician experienced in the area of high power electronics.

It is important to familiarize yourself with the following information before attempting any troubleshooting or service of the control. Most troubleshooting can be performed using only a digital voltmeter having at least 1 meg Ohm input impedance. In some cases, an oscilloscope with 5 MHZ minimum bandwidth may be useful. Before contacting Baldor, check that all power and control wiring is correct and installed according to the recommendations in this manual.

Event Log

From the Menu display screen, select Event Log and press enter.

If an error is displayed during operation, press the “Help” key to learn more about the error. If more than one error was logged, access the Event Log and examine each error Entry at the time of the event to learn more about the error. Only events that occurred approximately at the time of the event need to be checked. Older events are probably not related.

Action	Description	Display	Comments
Status Display	After power–up the display shows the Status screen.	STATUS FWD LOCAL 159.5 V 600 RPM 6.2 A 20.00 HZ DIAG 20.00r MAIN	
Press Menu	Displays top level menu options.	STATUS QUICK SETUP PROGRAMMING EVENT LOG DIAGNOSTICS DISPLAY OPTIONS DIAG BACK	Press ▲ or ▼ to move cursor over the “EVENT LOG” selection. Press Enter to view the event log.
Event Log Display	Displays error name, Entry # and time the error occurred. LOW INITIAL BUS 0 Date Time Entry # 0–9 DD/MM/YY HH:MM	EV. LOG STOP LOCAL LOW INITIAL BUS 0 04–Jul–06 09:35:00 STATUS TRACE	Press ▲ or ▼ to view next entry. Press R to view Trace log. Press A to return to Status Menu.

Trace Trace is used to display control conditions present at the time the fault occurred. Input states, Output states, various voltage and current values etc. can be viewed to help understand the cause of the fault condition. Each event in the Event log has its own trace displays that were captured when that event occurred. Scroll through the event log to the event you wish to investigate.

Action	Description	Display	Comments
Event Log Display	Displays error name, Entry # and time the error occurred. LOW INITIAL BUS 0 Date Time Entry # DD/MM/YY HH:MM 0–9	EV. LOG STOP LOCAL LOW INITIAL BUS 3 04–Jul–06 09:42:00 STATUS TRACE	Press ▲ or ▼ to view next entry. Press R to view Trace log. Press A to return to Status Menu.

Trace Displays

Action	Description	Display	Comments
Event Log Display	Press ▲ or ▼ to scroll to the event you want to investigate.	EV. LOG STOP LOCAL LOW INITIAL BUS 3 04–Jul–06 09:42:00 STATUS TRACE	Press R (or press Enter) to show the Trace log for the event.
Fault Trace Display	The Fault Latch word is displayed. 0x=Hexadecimal 0b=Binary	EV. LOG FAULT TRACE FAULT LATCH 0x0000 STATUS T0003 BACK	Press ▲ or ▼ to view next entry. This is a hex value. The T0003 indicates the Fault Trace for event 3 of the event log is displayed.

FAULT LATCH Word Interpretation

Hexadecimal	Binary	Description
0000	0000 0000 0000 0000	No Fault
0001	0000 0000 0000 0001	Motor Phase U upper Transistor
0002	0000 0000 0000 0010	Motor Phase U lower Transistor
0004	0000 0000 0000 0100	Motor Phase V lower Transistor
0008	0000 0000 0000 1000	Motor Phase V upper Transistor
0010	0000 0000 0001 0000	Motor Phase W lower Transistor
0020	0000 0000 0010 0000	Motor Phase W upper Transistor
0040	0000 0000 0100 0000	Brake Desaturation Fault
0080	0000 0000 1000 0000	Brake igbt fault
0100	0000 0001 0000 0000	Not Used
0200	0000 0010 0000 0000	Not Used
0400	0000 0100 0000 0000	Ground Fault
0800	0000 1000 0000 0000	Over Current Fault (Active Low)
1000	0001 0000 0000 0000	Pulse by Pulse fault on Motor Phase 1
2000	0010 0000 0000 0000	Pulse by Pulse fault on Motor Phase 2
4000	0100 0000 0000 0000	Pulse by Pulse fault on Motor Phase 3
8000	1000 0000 0000 0000	Inverter Desaturation Fault

Trace Displays Continued

Action	Description	Display	Comments
Fault Trace Display	The Alarm Latch word is also displayed. The T0003 indicates the Fault Trace for event 3 of the event log is displayed.	EV. LOG FAULT TRACE ALARM LATCH 0x0000 STATUS T0003 BACK	Press ▲ or ▼ to view next entry. This is a hex value.

ALARM LATCH Word Interpretation

Hexadecimal	Binary	Description
0000	0000 0000 0000 0000	No Alarm
0001	0000 0000 0000 0001	Fan Alarm
0002	0000 0000 0000 0010	Motor Over Temperature
0004	0000 0000 0000 0100	Phase Loss
0008	0000 0000 0000 1000	Line Loss
0010	0000 0000 0001 0000	Line Sag
0020	0000 0000 0010 0000	Power Supply Alarm
0040	0000 0000 0100 0000	Not Used
0080	0000 0000 1000 0000	Powerbase in pulse-by-pulse limiting
0100	0000 0001 0000 0000	Not Used
0200	0000 0010 0000 0000	Not Used
0400	0000 0100 0000 0000	Not Used
0800	0000 1000 0000 0000	Not Used
1000	0001 0000 0000 0000	Not Used
2000	0010 0000 0000 0000	Not Used
4000	0100 0000 0000 0000	Not Used
8000	1000 0000 0000 0000	Not Used

Action	Description	Display	Comments
Fault Trace Display	Third word in the event trace is the Voltage reference for the Analog to Digital Converter.	EV. LOG FAULT TRACE ADC CURRENT REF 0.000 V STATUS T0003 BACK	Press ▲ or ▼ to view next entry.
Fault Trace Display	Next is the Voltage measurement of the Internal 24V power supply for the Opto Inputs and Outputs.	EV. LOG FAULT TRACE 24 V REF 0.0 V STATUS T0003 BACK	Press ▲ or ▼ to view next entry.
Fault Trace Display	Next is the status of the nine Digital Input signals. J2–8 (Enable) left most digit=1. J2–16 (DIN#8) right most digit=0.	EV. LOG FAULT TRACE USER INPUTS 100000000 STATUS T0003 BACK	Press ▲ or ▼ to view next entry.

Trace Displays Continued

Action	Description	Display	Comments
Fault Trace Display	Next is the status of the Digital Output signals.	EV. LOG FAULT TRACE DIGITAL OUTPUTS 00000000 STATUS T0003 BACK	Press ▲ or ▼ to view next entry. This is a bit display, not a hex value.

Digital Outputs Display		Description
Hexadecimal	Binary	
00	0000 0000	No Fault
01	0000 0001	Actual Speed is less than Zero Speed Band
02	0000 0010	Main SCR enable (active low)
04	0000 0100	Dynamic Brake active
08	0000 1000	Soft start (pre-charge) relay active
10	0001 0000	Relay Output 2 (J3-28, 29, 30) active
20	0010 0000	Relay Output 1 (J3-25, 26, 27) active
40	0100 0000	Digital Output 2 (J2-19,20) active
80	1000 0000	Digital Output 1 (J2-17,18) active

Action	Description	Display	Comments
Fault Trace Display	Next is the voltage present at Analog Input 1.	EV. LOG FAULT TRACE ANA INPUT 1 0.0 V STATUS T0003 BACK	Press ▲ or ▼ to view next entry.
Fault Trace Display	Next is the voltage present at Analog Input 2.	EV. LOG FAULT TRACE ANA INPUT 2 0.0 V STATUS T0003 BACK	Press ▲ or ▼ to view next entry.
Fault Trace Display	Next is the Speed Reference Setting	EV. LOG FAULT TRACE SPEED REF 0.00HZ STATUS T0003 BACK	Press ▲ or ▼ to view next entry.
Fault Trace Display	Next is the AC output current on phase 1.	EV. LOG FAULT TRACE PH1 CURRENT 0.0 A STATUS T0003 BACK	Press ▲ or ▼ to view next entry.

Trace Displays Continued

Action	Description	Display	Comments
Fault Trace Display	Next is the AC output current on phase 2.	EV. LOG FAULT TRACE PH2 CURRENT 0.0 A STATUS T0003 BACK	Press ▲ or ▼ to view next entry.
Fault Trace Display	Next is the AC output current on phase 3.	EV. LOG FAULT TRACE PH3 CURRENT 0.0 A STATUS T0003 BACK	Press ▲ or ▼ to view next entry.
Fault Trace Display	Next is the Motor Current.	EV. LOG FAULT TRACE MOTOR CURRENT 0.0A STATUS T0003 BACK	Press ▲ or ▼ to view next entry.
Fault Trace Display	Next is the Motor Torque.	EV. LOG FAULT TRACE MOTOR TORQUE 0.0 NM STATUS T0003 BACK	Press ▲ or ▼ to view next entry.
Fault Trace Display	Next is the Motor Voltage.	EV. LOG FAULT TRACE MOTOR VOLTS 0.0V STATUS T0003 BACK	Press ▲ or ▼ to view next entry.
Fault Trace Display	Next is the Motor Speed.	EV. LOG FAULT TRACE MOTOR SPEED 0 RPM STATUS T0003 BACK	Press ▲ or ▼ to view next entry.
Fault Trace Display	Next is Bus Voltage.	EV. LOG FAULT TRACE BUS VOLTAGE 0.0 V STATUS T0003 BACK	Press ▲ or ▼ to view next entry.

Trace Displays Continued

Action	Description	Display	Comments
Fault Trace Display	Last is the temperature of the control heatsink.	EV. LOG FAULT TRACE DRIVE TEMP 0.0 °C STATUS T0003 BACK	Press ▲ or ▼ to view next entry.
Fault Trace Display	The fault code for the event.	EV. LOG FAULT TRACE FAULT LATCH 0x0000 STATUS T0003 BACK	Press ▲ or ▼ to view next entry.
Fault Trace Display	The alarm code for the event.	EV. LOG FAULT TRACE ALARM LATCH 0x0000 STATUS T0003 BACK	Press ▲ or ▼ to view next entry.
Fault Trace Display		EV. LOG END OF FAULT TRACE STATUS BACK	Press Enter or R to return to the event log.

Diagnostics Information

After power up, select the Diagnostic Menu to see information from the diagnostic displays.

Action	Description	Display	Comments
Press Menu	Displays top level menu options.	STATUS QUICK SETUP PROGRAMMING EVENT LOG DIAGNOSTICS DISPLAY OPTIONS EV. LOG BACK	Press ▲ or ▼ to move cursor over the “DIAGNOSTICS” selection. Press Enter to view diagnostic information.
Press ▶ to display next group.	DC Bus Voltage Drive Heatsink Temperature % Overload (remaining)	DIAG STOP LOCAL POWER BASE BUS VOLTAGE 333.9V DRIVE TEMP 26.1C OVERLOAD LE 100.0% EV. LOG 0.00r MAIN	Press ▶ or ◀ to go to the next or previous Diagnostic screen. Press R to return to previous menu.
Press ▶ to display next group.	Displays active operating mode settings.	DIAG STOP LOCAL OPERATING MODE Keypad Speed V/F Control EV. LOG 0.00r MAIN	

Diagnostics Continued

Action	Description	Display	Comments
Press ▶ to display next group.	Bit display of digital inputs, outputs and the voltage present at the internal 24V supply terminals. Note: Enable input=1. Out1=1.	DIAG STOP LOCAL DIGITAL I/O INPUTS 100000000 OUTPUTS 0001 USER 24V 24.9V EV. LOG 0.00r MAIN	Press ▶ or ◀ to go to the next or previous Diagnostic screen. Press R to return to previous menu.
Press ▶ to display next group.	Output Frequency, % Feedforward % Setpoint, % Feedback	DIAG STOP LOCAL PROC CONTROL PID 0.00HZ 0.0FF 0.0SP 0.0FB EV. LOG 0.00r MAIN	Press ▶ or ◀ to go to the next or previous Diagnostic screen. Press R to return to previous menu. Note: This screen does not appear if Level 2 Process Control, Process type is set to None.
Diagnostic Display	Displays software version, hp, volts and Amp/Volt ratings.	DIAG STOP LOCAL IHH–1.XX RATED HP 3HP RATED VOLTS 240.0V RATED A/V 4.0A/V EV. LOG 0.00r MAIN	Press ▶ or ◀ to go to the next or previous Diagnostic screen. Press R to return to previous menu.
Press ▶ to display next group.		DIAG STOP LOCAL IHH–1.XX RATED CURRE 9.6A RATED PK CU 16.8A EV. LOG 0.00r MAIN	Press ▶ or ◀ to go to the next or previous Diagnostic screen. Press R to return to previous menu.
Press ▶ to display next group.	Displays: Power Base ID number EE Firmware version FPGA firmware version	DIAG STOP LOCAL POWER BASE VERSION ID 0x000A2003 EE VER 0x00000001 FPGA VER 0x00000A02 EV. LOG 0.00r MAIN	Press ▶ or ◀ to go to the next or previous Diagnostic screen. Press R to return to previous menu.
Press ▶ to display next group.	Displays real time clock values (date and time) and total run time since installation. Press ENTER to set date and time.	DIAG STOP LOCAL REAL TIME CLOCK Jul 04, 2006 22:7:35 RUN TIMER 474.1HR EV. LOG 0.00r MAIN	Press ▶ or ◀ to go to the next or previous Diagnostic screen. Press R to return to previous menu.
Press ▶ to display next group.	Displays energy cost (based on parameter # 2305 value).	DIAG STOP LOCAL ENERGY EST POWER 0.00KW EST ENERGY 0.0KWH EST COST 0.0$ EV. LOG 0.00r MAIN	Press ▶ or ◀ to go to the next or previous Diagnostic screen. Press R to return to previous menu. Press A to go to Status screen.

Diagnostics Continued

Action	Description	Display	Comments
Press ▶ to display next group.	Diagnostic Analog Input values display.	DIAG STOP LOCAL ANALOG INPUTS ANA IN 1 1.3v ANA IN 2 0.0v EV. LOG 0.00r MAIN	Press ▶ or ◀ to go to the next or previous Diagnostic screen. Press R to return to previous menu.
Press ▶ to display next group.	Diagnostic Analog Output values display.	DIAG STOP LOCAL ANALOG OUTPUTS ANA OUT 1 0.0V ANA OUT 2 0.0V EV. LOG 0.00r MAIN	Press ▶ or ◀ to go to the next or previous Diagnostic screen. Press R to return to previous menu.
Press ▶ to display next group.	Full revolutions and encoder counts are displayed.	DIAG STOP LOCAL POSITION COUNTER REVOLUTIONS 0 COUNTS 0CNT EV. LOG 0r MAIN	Press ▶ or ◀ to go to the next or previous Diagnostic screen. Press R to return to previous menu.
Press ▶ to display next group.	Diagnostic installed Option Card identification display.	DIAG STOP LOCAL OPTION BOARDS OPTION 1 ETHERNET OPTION 2 NONE FEEDBACK NONE EV. LOG 0.00r MAIN	Press ▶ or ◀ to go to the next or previous Diagnostic screen. Press R to return to previous menu. Press A to go to Status screen.
Press ▶ to display next group.	Displays keypad software version.	DIAG STOP LOCAL KEYPAD VERSION KEYPAD SOF 1.XX 03/0 EV. LOG 0.00r MAIN	
Press ▶ to display next group.	Displays Composite Reference values.	DIAG STOP LOCAL COMPOSITE REF COMPONENT A 0.00% COMPONENT B 0.00% REFERENCE 0.00% EV. LOG 0.00r Alarm	

Fault Messages

Table 5-1 Fault Messages

Type	Fault Message Display	Description
	No fault exists	Control is operating properly, no faults recorded.
F	Unknown system fault	Reset the control. Restore parameter values to factory settings.
F	Configuration	Reset the control. Restore parameter values to factory settings.
F	SPI timeout	Serial Peripheral Interface (SPI) failure between control board and power board. Check connections.
F	Param checksum	Reset the control. Restore parameter values to factory settings.
F	New base ID	Changing the Power Base, Control board, or new firmware will most often cause this error. Reset the control. Restore parameter values to factory settings.
F	Over current	Motor current exceeded peak limit. Check: motor connections, motor load, increase accel/decel times.
F	Desaturation	Output current exceeds desat limit. Check: motor for short circuit, motor load, increase accel/decel times.
F	Ground fault	Ground Fault detected (output current leakage to ground). Disconnect motor, check motor for insulation leakage to ground.
F	Logic supply	Logic power supply failure detected.
F	Power Base Fault	Usually occurs with other faults. Fault detected in power base, see FPGA in event log trace.
F	Low Initial BUS	Bus volt less than 200/400/500V on 230/460/575V units at power up. Check: line volt, resistors on R1/ R2.
F	Current Sense	Occurs on power up, motor current sensor(s) out of tolerance.
F	User ref	Internal reference power supply out of tolerance.
F	User 24 V	24V at J1-23 and J1-24 out of spec. Check 24V, if below, remove wiring from terminal strip, re-check.
F	Current reference	Reference volt for current readings out of tolerance.
F	Overload - 1 minute	Peak output current exceeded the 1 minute rating value. Check motor and wires, Level 2 Pk CUR Limit value, Accel time or reduce motor load. Change Level 2 Drive Protect, Overload to “Foldback” and try again.
F	Overload - 3 seconds	Peak output current exceeded the 3 second rating value. Check motor and wires, Level 2 Pk CUR Limit value, Accel time or reduce motor load. Change Level 2 Drive Protect, Overload to “Foldback” and try again.
F	Motor Overload	Motor current exceeded preset limits: 125% for 590 sec., 150% for 150 sec. or 200% for 50 sec.
F	Following Error	Speed error beyond Set Speed Band parameter value. Verify motor is not overloaded.
F	DC Bus High	DC Bus V over 405/810/1000V for 230V/460V/575V units. Check line volt, decel rates, resistor on R1/ R2.
F	DC Bus Low	DC Bus V below 220/440/550V for 230V/460V/575V units. Check line volt, B+ to B- voltage.
F	Drive Over TEMP	Heatsink temp exceeded 85/95°C. Verify ambient does not exceed 45°C. Clean fans and heatsink.
F	Drive Low TEMP	Heatsink temp is less than allowed (-10°C).
F	External trip	Connection at J2-16 is open and P2201 is set to ON.
F	Torque Proving	Failed to measure current in one or more motor phases. Check motor connections or open motor contacts.
F	Regen R or PWR	Excessive resistor power dissipation. Check resistor ratings, extend decel times, or add larger braking kit.
F	EEPROM fault (Powerbase EE, Control EE, Flt Log Mem, NV memory)	EE memory. Reset the control. Restore parameter values to factory settings.
F	Internal Config	Software boot error. Reset the control. Restore parameter values to factory settings.
F	Dyn Brake Desat	Dynamic braking current limit exceeded. Check for shorted braking resistor circuit.
A	Line Loss	All 3 input phases lost. Check input circuit breaker, fuses or input contacts.
A	Phase Loss	One input phase lost. Check input circuit breaker, fuses or input contacts.
F	U Upper Fault	Power transistor gate fault on T1.
F	U Lower Fault	Power transistor gate fault on T1.
F	V Upper Fault	Power transistor gate fault on T2.
F	V Lower Fault	Power transistor gate fault on T2.
F	W upper fault	Power transistor gate fault on T3.
F	W lower fault	Power transistor gate fault on T3.
F	Ph1 pulse	Phase 1 (T1) curr limiting via pulse by pulse method; check motor: spiking loads, chattering contacts.
F	Ph2 pulse	Phase 2 (T2) curr limiting via pulse by pulse method; check motor: spiking loads, chattering contacts.
F	Ph3 pulse	Phase 3 (T3) curr limiting via pulse by pulse method; check motor: spiking loads, chattering contacts.
F	Network Timeout	Forced network fault. Possible reason: watchdog, timing, user control.
F	Memory	Option card problem, memory failure.
A	Aux Filter Setup	Filter Source should be set to Raw Speed when destination is set to Speed Loop.
F	Power Base FPGA	Power base communication loss or invalid FPGA version.
A	Sel FB Source	Encoder Source Not Selected/Feedback Board is absent. Choose the appropriate card for encoder feedback.

F = Fault, A = Alarm

Table 5-1 Fault Messages Continued

Type	Fault Message Display	Description
F	Download	Parameter download from keypad or network has failed. Verify parameter set compatibility.
F	Parameter	Parameters momentarily locked. Wait 30 seconds, try again
A	Invalid FB Sel	Feedback board not installed on this slot. Select an encoder feedback board as encoder source.
F	ADC Calib Fault	Internal ADC calibration voltages out of range.
F	Encoder Loss	Encoder detected but has poor or no signal. Check encoder wiring.
F	Over Speed	Rotor speed over 110% maximum speed limit.
F	DC Bus Short	For UL testing only. Call Baldor for service.
A	Motor Overtemp	Motor has overheated, check: cooling system or blocked air flow.
A	Fan Loss	Fan circuit is seeing low current or over current. Check fan circuit.
F	DC PK Overvolt	Bus peak voltage rating exceeded. Check: AC input lines; sizing of dynamic brake.
A	Line Sag	All 3 phase input lines have sagged below 70% of nominal. Check input line quality
F	Brake Desat	Dynamic brake de-saturation has occurred. Check dynamic brake circuit.
F	Pre-charge Fault	Dynamic Brake miswired, AC Input too low, Bus Capacitors shorted or Input Single Phasing
A	Drive Disabled	Motion command given with drive disabled. Check: drive enable input.
A	Drive Enabled	Drive enabled during parameter download. Drive must be disabled.
A	PB Power Supply	Power base logic power supply output is too low.
A	AC Input High	Correct the AC input line voltage high condition.
A	Initial Pos	The initial position reading from the absolute position feedback could not be read or is out of expected range.
A	Invalid Res Sel	The feedback source selected is not a resolver board
F	Resolver Loss	Resolver detected but has poor or no signal. Check resolver wiring
A	PF Setup	Pulse follower option board setup incorrect. Check Master PPR, receive, transmit ratio and input type.
A	Option Not Found	Option Board for the feature requested is not installed.
F	Pos Cnt Overflow	Position counter has has exceeded max or min range.
A	Opt1 Protocol or Opt2 Protocol	Invalid protocol selected for OPT communication card 1 or card 2.
A	Excess Faults/Hr	The allowed number of faults/hour has been exceeded.
F	Motor Overload	Motor overloaded. Check motor load. Verify motor rated amps parameter.
F	PLC Mode Trip	PLC Mode Trip. PLC action has generated this trip. Check PLC program logic.

F = Fault, A = Alarm

Electrical Noise Considerations

All electronic devices are vulnerable to significant electronic interference signals (commonly called “Electrical Noise”). At the lowest level, noise can cause intermittent operating errors or faults. From a circuit standpoint, 5 or 10 millivolts of noise may cause detrimental operation. For example, analog speed and torque inputs are often scaled at 5 to 10VDC maximum with a typical resolution of one part in 1,000. Thus, noise of only 5 mV represents a substantial error.

At the extreme level, significant noise can cause damage to the drive. Therefore, it is advisable to prevent noise generation and to follow wiring practices that prevent noise generated by other devices from reaching sensitive circuits. In a control, such circuits include inputs for speed, torque, control logic, and speed and position feedback, plus outputs to some indicators and computers.

Relay and Contactor Coils

Among the most common sources of noise are the coils of contactors and relays. When these highly inductive coil circuits are opened, transient conditions often generate spikes of several hundred volts in the control circuit. These spikes can induce several volts of noise in an adjacent wire that runs parallel to a control-circuit wire. Figure 5-1 illustrates noise suppression for AC and DC relay coils.

Figure 5-1 AC and DC Coil Noise Suppression

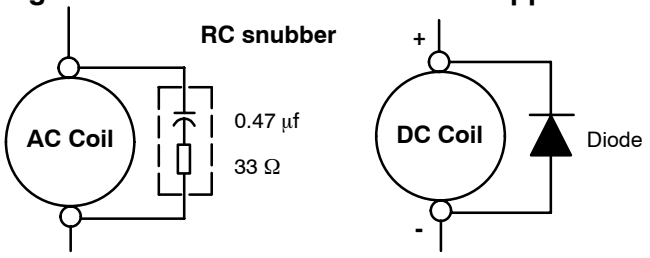

Wires between Controls and Motors

Output leads from a typical 460VAC drive controller contain rapid voltage rises created by power semiconductors switching 650V in less than a microsecond, 1,000 to 10,000 times a second. These noise signals can couple into sensitive drive circuits. If shielded pair cable is used, the coupling is reduced by nearly 90%, compared to unshielded cable.

Even input AC power lines contain noise and can induce noise in adjacent wires. In some cases, line reactors may be required.

To prevent induced transient noise in signal wires, all motor leads and AC power lines should be contained in rigid metal conduit, or flexible conduit. Do not place line conductors and load conductors in same conduit. Use one conduit for 3 phase input wires and another conduit for the motor leads. The conduits should be grounded to form a shield to contain the electrical noise within the conduit path. Signal wires - even ones in shielded cable should never be placed in the conduit with motor power wires.

Special Drive Situations

For severe noise situations, it may be necessary to reduce transient voltages in the wires to the motor by adding load reactors. Load reactors are installed between the control and motor.

Line and Load Reactors are typically 3% reactance and are designed for the frequencies encountered in PWM drives. For maximum benefit, the reactors should be mounted in the drive enclosure with short leads between the control and the reactors.

Control Enclosures

Motor controls mounted in a grounded enclosure should also be connected to earth ground with a separate conductor to ensure best ground connection. Often grounding the control to the grounded metallic enclosure is not sufficient. Usually painted surfaces and seals prevent solid metallic contact between the control and the panel enclosure. Likewise, conduit should never be used as a ground conductor for motor power wires or signal conductors.

Special Motor Considerations

Motor frames must also be grounded. As with control enclosures, motors must be grounded directly to the control and plant ground with as short a ground wire as possible. Capacitive coupling within the motor windings produces transient voltages between the motor frame and ground. The severity of these voltages increases with the length of the ground wire. Installations with the motor and control mounted on a common frame, and with heavy ground wires less than 10 ft. long, rarely have a problem caused by these motor−generated transient voltages.

Analog Signal Wires

Analog signals generally originate from speed and torque controls, plus DC tachometers and process controllers. Reliability is often improved by the following noise reduction techniques:

- Use twisted-pair shielded wires with the shield grounded at the drive end only.
- Route analog signal wires away from power or control wires (all other wiring types).
- Cross power and control wires at right angles (90°) to minimize inductive noise coupling.

Section 6
Specifications, Ratings & Dimensions

Specifications:

Input Ratings	Voltage	120	240	240	480	600
	Voltage Range	95–130	180–264	180–264	340–528	515–660
	Phase	Single Phase		Three Phase (single phase with derating)		
	Frequency	50/60Hz ±5%				
	Impedance	1% minimum from mains connection				

Output Ratings	Horsepower	$^3/_4$-3 HP @ 120/240VAC, 1PH $^3/_4$-40 HP @ 240VAC, 3PH $^3/_4$-60 HP @ 480VAC, 3PH $^3/_4$-60 HP @ 600VAC, 3PH
	Overload Capacity	Constant Torque = 150% for 60 seconds, 175% for 3 seconds Variable Torque = 115% for 60 seconds
	Frequency	0–500Hz
	Voltage	0 to maximum input voltage (RMS)

Protective Features	Trip	Missing control power, over current, over voltage, under voltage, over temperature (motor or control), output shorted or grounded, motor overload
	Stall Prevention	Over voltage suppression, overcurrent suppression
	External Output	LED trip condition indicators, 4 assignable logic outputs, 2 assignable analog outputs
	Short Circuit	Phase to phase, phase to ground
	Electronic Motor Overload	Meets UL508C (I^2T)

Environmental Conditions	Temperature	–10 to 45 °C. Derate 3% per degree C to maximum ambient temperature of 55 °C.
	Cooling	Forced air
	Enclosure	NEMA 1 E (suffix) models NEMA 4X: W (suffix) models
	Altitude	Sea level to 3300 Feet (1000 Meters) Derate 2% per 1000 Feet (303 Meters) above 3300 Feet
	Humidity	NEMA 1 10 to 90% RH Non-Condensing NEMA 4X To 100% RH Condensing
	Shock	1G
	Vibration	0.5G at 10Hz to 60Hz
	Storage Temperature	-10 to +65 °C
	Duty Cycle	1.0

Keypad Display	Display	LCD Graphical 128x64 Pixel
	Keys	14 key membrane with tactile response
	Functions	Output status monitoring Digital speed control Parameter setting and display Diagnostic and Fault log display Motor run and jog Local/Remote toggle
	LED Indicators	Forward run command Reverse run command Stop command Jog active
	Remote Mount	200 feet (60.6m) maximum from control
	Trip	Separate message and trace log for each trip, last 10 trips retained in memory

Specifications Continued

Control Specifications	Control Method	Microprocessor controlled PWM output, selectable encoderless vector or V/Hz inverter
	PWM Frequency	Adjustable 1.5–5kHz STD, 5–16 kHz quiet
	Frequency Setting	±5 VDC, 0–5 VDC ±10 VDC, 0–10 VDC, 4–20 mA or 0–20 mA; digital (keypad), Serial Comms/USB 2.0, and Modbus RTU standard
	Accel/Decel	0–3600 seconds
	V/Hz Ratio	Linear to squared reduced, base frequency, output voltage, minimum frequency limit, maximum frequency limit
	Torque Boost	0–30% of input voltage; automatic with manual override
	Brake Torque	20% standard on Sizes AA and B, 1% standard on Size C
	Skip Frequency	Three zones 0–Max frequency
	PC Setup Software	Workbench Software available using the USB2.0 port for commissioning wizard, firmware download, parameter viewer, scope capture and cloning
	Velocity Loop Bandwidth	Adjustable to 180 Hz (Control only)
	Current Loop Bandwidth	Adjustable to 1200 Hz (Control only)
	Maximum Output Frequency	500 Hz
	Quiet PWM Frequency Version	Full rating 5-8 kHz PWM frequency, Adjustable to 16 kHz with linear derating (between 8 - 16kHz) of 50% at 16 kHz 600VAC controls do not allow operation above 2.5kHz
	Standard PWM Frequency Version	Full rating 1.5-2.5 kHz PWM frequency, Adjustable to 5 kHz with linear derating (between 2.5 - 5kHz) of 20% (240VAC) at 5 kHz Adjustable to 5 kHz with linear derating (between 2.5 - 5kHz) of 25% (480/600VAC) at 5 kHz
	Selectable Operating Modes	Keypad Standard Run, 2 Wire Standard Run, 3 Wire 15 Preset Speeds Fan Pump 2 Wire Fan Pump 3 Wire Process Control 3 SPD ANA 2 Wire 3 SPD ANA 3 Wire Electronic Pot 2 Wire Electronic Pot 3 Wire Network Profile Run Bipolar

Specifications Continued

Differential Analog Input	Common Mode Rejection	40 db
	Full Scale Range	±5VDC, ±10VDC, 4-20 mA and 0–20 mA
	Resolution	11 bits + sign
	Input Impedance	20kOhms (Volt mode); 500Ohms (Current mode)

Single Ended Analog Input	Full Scale Range	0 - 10 VDC
	Resolution	11 bits + sign
	Input Impedance	20kOhms

Analog Outputs	Analog Outputs	2 Assignable
	Full Scale Range	±10 VDC or 0 to 20mA
	Source Current	1 mA maximum
	Resolution	9 bits + sign

Digital Inputs	Opto-isolated Inputs	8 Assignable, 1 dedicated input (Drive Enable)
	Rated Voltage	10 - 30 VDC (closed contacts std)
	Input Impedance	4.71 k Ohms
	Leakage Current	10 μA maximum
	Update Rate	16 msec

Digital Outputs (2 Opto Outputs)	Rated Voltage	5 to 30VDC
	Maximum Current	60 mA Maximum
	ON Voltage Drop	2 VDC Maximum
	OFF Leakage Current	0.1 μA Maximum
	Output Conditions	25 Conditions (see Output Setup Block parameter table, Table B-1)

Digital Outputs (2 Relay Outputs)	Rated Voltage	5 to 30VDC or 240VAC
	Maximum Current	5A Maximum non–inductive
	Output Conditions	25 Conditions (see Output Setup Block parameter table, Table B-1)

Diagnostic Indications:

Current Sense Fault
Ground Fault
Instantaneous Over Current
Overload
Line Power Loss
Microprocessor Failure
Over temperature (Motor or Control)
Over speed
Regeneration (db) Overload
Soft Start Fault
Under Voltage
Ready
Parameter Loss
Overload
Overvoltage
Torque Proving
Following Error
Encoder Loss
Logic Power Fault
PWR Base Fault

Note: All specifications are subject to change without notice.

Catalog Number Identification

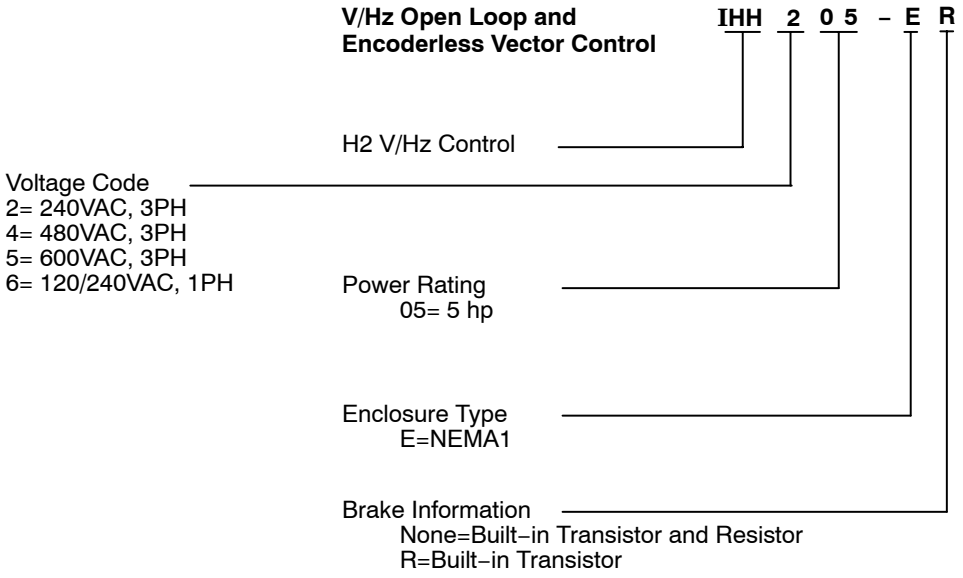

Ratings Series H2 Stock Products

Catalog No.	Input Volt	Size	Standard 2.5 kHz PWM									
			Constant Torque					Variable Torque				
			Input Amp	Output				Input Amp	Output			
				HP	KW	IC	IP		HP	KW	IC	IP
IHH201-E, W	240	AA	4.2	1	0.75	4.2	7.4	6.8	2	1.5	6.8	7.8
IHH202-E, W	240	AA	6.8	2	1.5	6.8	11.9	9.6	3	2.2	9.6	11
IHH203-E, W	240	AA	9.6	3	2.2	9.6	16.8	15.2	5	3.7	15.2	17.5
IHH205-E, W	240	AA	15.2	5	3.7	15.2	26.6	22	7 1/2	5.6	22	25.3
IHH207-E, W	240	AA	22	7 1/2	5.6	22	38.5	22	7 1/2	5.6	22	32.2
IHH210-E	240	B	28	10	7.5	28	49	42	15	11	42	48.3
IHH215-E	240	B	42	15	11	42	74	42	20	15	54	62
IHH220-E	240	B	54	20	15	55	96	42	20	15	54	62
IHH225-E	240	C	68	25	18.7	68	119	80	30	22.4	80	92
IHH230-E	240	C	80	30	22.4	80	140	104	40	30	104	120
IHH240-E	240	C	104	40	29	104	182	104	40	30	104	120
IHH250-E	240	D	130	50	37	130	228	154	50	37	154	177
IHH260-E	240	D	154	60	44	154	270	192	60	44	192	221
IHH401-E, W	480	AA	2.1	1	0.75	2.1	3.7	3.7	2	1.5	3.4	3.9
IHH402-E, W	480	AA	3.4	2	1.5	3.4	6.0	4.8	3	2.2	4.8	5.5
IHH403-E, W	480	AA	4.8	3	2.2	4.8	8.4	7.6	5	3.7	7.6	8.8
IHH405-E, W	480	AA	7.6	5	3.7	7.6	13.3	11	7 1/2	5.6	11	12.7
IHH407-E, W	480	AA	11.0	7 1/2	5.6	11	19.3	14	10	7.5	14	16.1
IHH410-E, W	480	AA	14	10	7.5	14	24.5	14	10	7.5	14	16.1
IHH415-E	480	B	21	15	11	21	37	27	20	15	27	33.8
IHH420-E	480	B	27	20	15	27	47	34	25	18.5	34	42.5
IHH425-E	480	B	34	25	18.5	34	60	40	30	22	40	50
IHH430-E	480	C	40	30	22	40	70	52	40	30	52	60
IHH440-E	480	C	52	40	30	52	91	65	50	37	65	75
IHH450-E	480	C	65	50	37	65	114	77	60	45	77	89
IHH460-E	480	D	77	60	44	77	135	96	75	56	96	110
IHH475-E	480	D	96	75	56	96	168	124	100	75	124	143
IHH4100-E	480	D	124	100	75	124	217	156	125	93	156	179
IHH4125-E	480	D	156	125	93	156	273	180	150	112	180	207
IHH501-E, W	600	AA	1.7	1	0.75	1.7	3.0	2.7	2	1.5	2.7	3.1
IHH502-E, W	600	AA	2.7	2	1.5	2.7	4.7	3.9	3	2.2	3.9	4.5
IHH503-E, W	600	AA	3.9	3	2.2	3.9	6.8	6.1	5	3.7	6.1	7.0
IHH505-E, W	600	AA	6.1	5	3.7	6.1	10.7	9	7 1/2	5.6	9	10.4
IHH507-E, W	600	AA	9.0	7 1/2	5.6	9	15.8	11	10	7.5	11	12.7
IHH510-E, W	600	AA	11.3	10	7.5	11	19.3	11	10	7.5	11	12.7
IHH515-E	600	B	17.5	15	11	17	30	23	20	15	22	25.3
IHH520-E	600	B	23	20	15	22	39	28	25	18.5	27	31
IHH525-E	600	B	28	25	18	27	47	28	25	18.5	32	36.8
IHH530-E	600	C	33	30	22	32	56	42	40	30	41	51
IHH540-E	600	C	42	40	30	41	72	56	50	37	52	60
IHH550-E	600	C	56	50	37	52	91	67	60	45	62	71
IHH560-E	600	D	62	60	44	62	109	77	75	56	77	89
IHH575-E	600	D	77	75	56	77	135	99	100	75	99	114
IHH5100-E	600	D	99	100	75	99	173	125	125	93	125	144
IHH5125-E	600	D	125	125	93	125	219	144	150	112	144	166
IHH601-E	120	AA	12	1	0.75	4.2	7.4	20	2	1.5	6.8	7.8
	240	AA	6.3	1	0.75	4.2	7.4	10.2	2	1.5	6.8	7.8
IHH602-E	120	AA	20	2	1.5	6.8	11.9	30	3	2.2	9.6	11
	240	AA	10.2	2	1.5	6.8	11.9	14.4	3	2.2	9.6	11
IHH603-E	120	AA	30	3	2.2	9.6	16.8	30	3	2.2	9.6	11
	240	AA	14.4	3	2.2	9.6	16.8	14.4	3	2.2	9.6	11

Ratings Series H2 Stock Products Continued

Catalog No.	Input Volt	Size	Quiet 8.0 kHz PWM									
			Constant Torque					Variable Torque				
			Input Amp	Output				Input Amp	Output			
				HP	KW	IC	IP		HP	KW	IC	IP
IHH201-E, W	240	AA	4.2	1	0.75	4.2	7.4	4.2	1	0.75	4.2	4.8
IHH202-E, W	240	AA	4.2	1	0.75	4.2	7.4	6.8	2	1.5	6.8	7.8
IHH203-E, W	240	AA	6.8	2	1.5	6.8	11.9	9.6	3	2.2	9.6	11.0
IHH205-E, W	240	AA	9.6	3	2.2	9.6	16.8	15.2	5	3.7	15.2	17.5
IHH207-E, W	240	AA	15.2	5	3.7	15.2	26.6	22	7 1/2	5.6	22	25.3
IHH210-E	240	B	22	7 1/2	5.6	22	39	28	10	7.5	28	32
IHH215-E	240	B	28	10	7.5	28	49	42	15	11	42	48
IHH220-E	240	B	42	15	11	42	74	56	20	15	54	62
IHH225-E	240	C	54	20	15	54	95	68	25	18.7	68	78
IHH230-E	240	C	78	25	18.7	68	119	80	30	22.4	80	92
IHH240-E	240	C	80	30	22.4	80	140	104	40	29	104	120
IHH250-E	240	D	104	40	29	104	182	130	50	37	130	167
IHH260-E	240	D	130	50	37	130	228	154	60	44	154	177
IHH401-E, W	480	AA	2.1	1	0.75	2.1	3.7	2.1	1	0.75	2.1	2.4
IHH402-E, W	480	AA	2.1	1	0.75	2.1	3.7	3.4	2	1.5	3.4	3.9
IHH403-E, W	480	AA	3.4	2	1.5	3.4	6.0	4.8	3	2.2	4.8	5.5
IHH405-E, W	480	AA	4.8	3	2.2	4.8	8.4	7.6	5	3.7	7.6	8.8
IHH407-E, W	480	AA	7.6	5	3.7	7.6	13.3	11	7 1/2	5.6	11	12.7
IHH410-E, W	480	AA	11.3	7 1/2	5.6	11	19.3	15	10	7.5	14	16.1
IHH415-E	480	B	14	10	7.5	14	24.5	21	15	11	21	24.2
IHH420-E	480	B	21	15	11	21	36.8	27	20	15	27	31
IHH425-E	480	B	27	20	15	27	47	34	25	18.5	34	39
IHH430-E	480	C	34	25	18.7	34	60	40	30	22	40	46
IHH440-E	480	C	40	30	22.4	40	70	52	40	30	52	60
IHH450-E	480	C										
IHH460-E	480	D	65	50	37	65	114	77	60	44	77	89
IHH475-E	480	D	77	60	44	77	135	96	75	56	96	110
IHH4100-E	480	D	96	75	56	96	168	124	100	75	124	143
IHH4125-E	480	D	124	100	75	124	217	156	125	93	156	179
IHH501-E, W	600	AA	1.3	0.75	0.56	1.3	2.3	1.7	1	0.75	1.7	2.0
IHH502-E, W	600	AA	1.7	1	0.75	1.7	3.0	2.7	2	1.5	2.7	3.1
IHH503-E, W	600	AA	2.7	2	1.5	2.7	4.7	3.9	3	2.2	3.9	4.5
IHH505-E, W	600	AA	3.9	3	2.2	3.9	6.8	6.1	5	3.7	6.1	7.0
IHH507-E, W	600	AA	6.1	5	3.7	6.1	10.7	9	7 1/2	5.6	9	10.4
IHH510-E, W	600	AA	9.3	7 1/2	5.6	9	15.8	11.3	10	7.5	11	12.7
IHH515-E	600	B	11.3	10	7.5	11	19.3	18	15	11	17	19.6
IHH520-E	600	B	18	15	11	17	30	23	20	15	22	25
IHH525-E	600	B	23	20	15	22	39	28	25	18.5	27	31
IHH530-E	600	C										
IHH540-E	600	C										
IHH550-E	600	C										
IHH560-E	600	D	52	50	37	52	91	62	60	44	62	71
IHH575-E	600	D	62	60	44	62	109	77	75	56	77	89
IHH5100-E	600	D	77	75	56	77	135	99	100	75	99	114
IHH5125-E	600	D	99	100	75	99	173	125	125	93	125	144
IHH601-E	120	AA	7.4	0.75	0.56	3.2	5.6	12	1	0.75	4.2	4.8
	240	AA	4.8	0.75	0.56	3.2	5.6	6.3	1	0.75	4.2	4.8
IHH602-E	120	AA	12	1	0.75	4.2	7.4	20	2	1.5	6.8	7.8
	240	AA	6.3	1	0.75	4.2	7.4	10.2	2	1.5	6.8	7.8
IHH603-E	120	AA	20	2	1.5	6.8	11.9	30	3	2.2	9.6	11
	240	AA	10.2	2	1.5	6.8	11.9	14.4	3	2.2	9.6	11

Terminal Tightening Torque Specifications

240 VAC Catalog No.	Tightening Torque									
	Power TB1		Ground		Control J1, J2, J3		B+/R1; B+; B–; or R2		TH1 and TH2	
	Lb-in	Nm	Lb-in	Nm	Lb-in	Nm	Lb-in	Nm	Lb-in	Nm
IHH201-E, W	8	0.9	15	1.7	4.5	0.5	8	0.9	4	0.45
IHH202-E, W	8	0.9	15	1.7	4.5	0.5	8	0.9	4	0.45
IHH203-E, W	8	0.9	15	1.7	4.5	0.5	8	0.9	4	0.45
IHH205-E, W	8	0.9	15	1.7	4.5	0.5	8	0.9	4	0.45
IHH207-E, W	8	0.9	15	1.7	4.5	0.5	8	0.9	4	0.45
IHH210-E	35	4	50	5.6	4.5	0.5	35	4	4	0.45
IHH215-E	35	4	50	5.6	4.5	0.5	35	4	4	0.45
IHH220-E	35	4	50	5.6	4.5	0.5	35	4	4	0.45
IHH225-E	50	5.6	50	5.6	4.5	0.5	50	5.6	4	0.45
IHH230-E	50	5.6	50	5.6	4.5	0.5	50	5.6	4	0.45
IHH240-E	50	5.6	50	5.6	4.5	0.5	50	5.6	4	0.45
IHH401-E, W	8	0.9	15	1.7	4.5	0.5	8	0.9	4	0.45
IHH402-E, W	8	0.9	15	1.7	4.5	0.5	8	0.9	4	0.45
IHH403-E, W	8	0.9	15	1.7	4.5	0.5	8	0.9	4	0.45
IHH405-E, W	8	0.9	15	1.7	4.5	0.5	8	0.9	4	0.45
IHH407-E, W	8	0.9	15	1.7	4.5	0.5	8	0.9	4	0.45
IHH410-E, W	8	0.9	15	1.7	4.5	0.5	8	0.9	4	0.45
IHH415-E	35	4	50	5.6	4.5	0.5	35	4	4	0.45
IHH420-E	35	4	50	5.6	4.5	0.5	35	4	4	0.45
IHH425-E	35	4	50	5.6	4.5	0.5	35	4	4	0.45
IHH430-E	50	5.6	50	5.6	4.5	0.5	50	5.6	4	0.45
IHH440-E	50	5.6	50	5.6	4.5	0.5	50	5.6	4	0.45
IHH450-E	50	5.6	50	5.6	4.5	0.5	50	5.6	4	0.45
IHH501-E, W	8	0.9	15	1.7	4.5	0.5	8	0.9	4	0.45
IHH502-E, W	8	0.9	15	1.7	4.5	0.5	8	0.9	4	0.45
IHH503-E, W	8	0.9	15	1.7	4.5	0.5	8	0.9	4	0.45
IHH505-E, W	8	0.9	15	1.7	4.5	0.5	8	0.9	4	0.45
IHH507-E, W	8	0.9	15	1.7	4.5	0.5	8	0.9	4	0.45
IHH510-E, W	8	0.9	15	1.7	4.5	0.5	8	0.9	4	0.45
IHH515-E	35	4	50	5.6	4.5	0.5	35	4	4	0.45
IHH520-E	35	4	50	5.6	4.5	0.5	35	4	4	0.45
IHH525-E	35	4	50	5.6	4.5	0.5	35	4	4	0.45
IHH530-E	50	5.6	50	5.6	4.5	0.5	50	5.6	4	0.45
IHH540-E	50	5.6	50	5.6	4.5	0.5	50	5.6	4	0.45
IHH550-E	50	5.6	50	5.6	4.5	0.5	50	5.6	4	0.45
IHH601-E	8	0.9	15	1.7	4.5	0.5	8	0.9	4	0.45
IHH602-E	8	0.9	15	1.7	4.5	0.5	8	0.9	4	0.45
IHH603-E	8	0.9	15	1.7	4.5	0.5	8	0.9	4	0.45

Mounting Dimensions

Size AA, B, C and D Controls

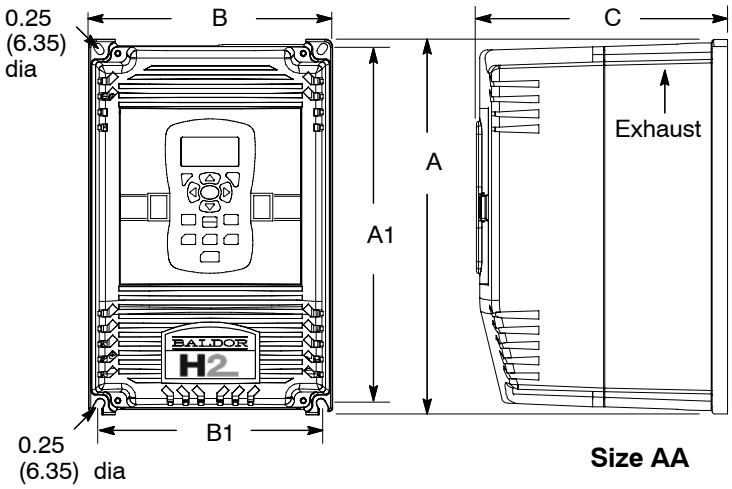

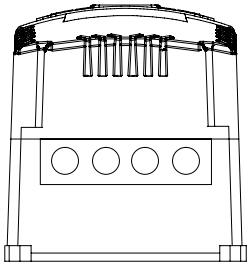

Size	# Holes	Diameter inches (mm)
AA	4	0.6 (15)

Size AA

OM2000A01

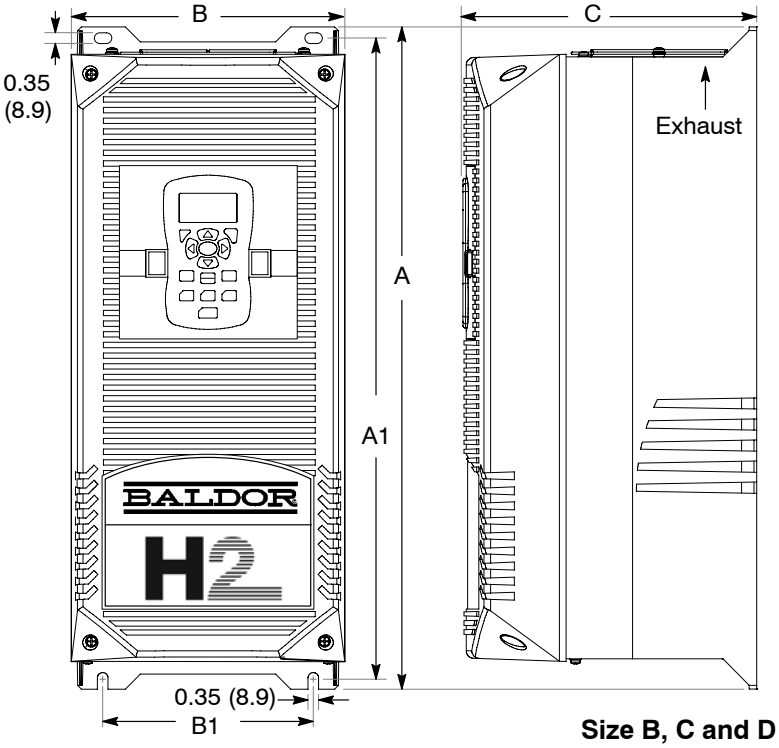

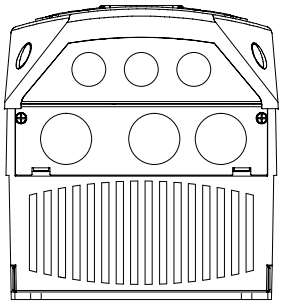

Size	# Holes	Diameter inches (mm)
B	3	0.6 (15)
	3	1.25 (32)
C	3	0.6 (15)
	3	1.68 (42)
D	3	0.6 (15)
	3	1.68 (42)

Size B, C and D

OM2000A00
OM2000A02

Size	Dimensions inches(mm)				
	Outside			Mounting	
	Height (A)	Width (B)	Depth (C)	Height (A1)	Width (B1)
AA	12.27 (311)	7.97 (202)	8.21 (208)	11.75 (298)	7.38 (187)
B	18.00 (457)	9.10 (231)	9.75 (248)	17.25 (438)	7.00 (178)
C	22.00 (559)	9.10 (231)	9.75 (248)	21.25 (540)	7.00 (178)
D	28.00 (711)	11.50 (292)	13.00 (330)	27.25 (692)	9.50 (241)

Section 7
H2 PLC Mode Description

Overview

PLC functionality is selected by setting Level 1, Input Setup block, Operating Mode parameter P#1402 to PLC. PLC mode allows 2−Wire operating modes to be created using a selection of conditions, logical operators and desired actions. It is selected by setting Level 1, Input Setup Block, Operating Mode parameter P1401 to PLC. PLC Mode parameters are located in Level 3, PLC block parameters P3401 through P3441.
3−Wire modes are not allowed.

Simply stated, for each logical statement choose two conditions from Table 7-1, one logical operation from Table 7-2 and one action from Table 7-3. These 16 logical statements are evaluated every 10 milli seconds, in order from P3401 to 3416. For each statement Condition 1 and Condition 2 are evaluated to True or False, the Logical Operator is applied and the final outcome is either True or False.
If True the Action is taken; if False the Alternate Action is taken.
Conditions, operators and actions are pre−defined and so cannot be changed.

Configuration Parameters

The PLC program is contained within 16 statements, PLC CONFIG 1 (P3401) through PLC CONFIG 16 (P3416). Each statement has the same 32 bit word format and structure as the example given in Figure 7-1.

If P3401−P3216 are not programmed, the PLC Mode will do nothing. It is also possible to program them so that the motor will not move. This can happen, for instance, if no Forward/Reverse Enables are programmed.

Figure 7-1 Example PLC Configuration Parameters

Parameter Number Format = DDD.CCC.BBB.AAA

Where:

DDD = bits 31−24	Byte 3
CCC = bits 23−16	Byte 2
BBB = bits 15−8	Byte 1
AAA = bits 7−0	Byte 0

Parameter No.	Hex Byte 3	Hex Byte 2	Hex Byte 1	Hex Byte 0
P3401 −3416	Condition ID MSD (Table 7-1)	Logical Operator ID (Table 7-2)	Condition ID (Table 7-1)	Action ID LSD (Table 7-3)

Example: P3401 = 051.000.000.020

051 = Digital Input 1 (from Table 7-1).
000 = OR (from Table 7-2).
000 = False (from Table 7-1).
020 = Forward (from Table 7-3).

A configuration parameter may be disabled (turned off) by setting bit 23 in its configuration word. This is the same as setting the top most bit of byte 2 (the logical operator ID field). If any field within any of these parameters is invalid, it is ignored at run time.

Only one runtime version exists at a time. The runtime version in effect is the one defined by the parameter table active at the time the drive was placed in Remote Mode.

To switch runtime PLC versions perform the following operations:

1. Disable the drive.
2. At the keypad, select “Local” mode.
3. Select the desired parameter table.
4. Enable the drive.
5. At the keypad, select “Remote” mode.

If a parameter table is switched while the drive is enabled the runtime PLC version is not affected.

Comparator Parameters

Comparator parameters provide a way to monitor real−time signals within the drive and apply them to the PLC Mode’s logic. They may be used on the condition definition side of the PLC Mode’s logic.
Parameters P3431 and P3433 hold parameter numbers (i.e. they point to other parameters, **see Monitor and RTC section in this manual for these values**). P3432 and P3434 hold percents that are applied against P3431 and P3433 maximums, together they provide all that is needed for the following comparison equations:

If |Value of P3431| ≤ (P3432/100)*(Max of P3431) then True
or
If |Value of P3433| ≤ (P3434/100)*(Max of P3433) then True

In a sense P3431 and P3433 may be viewed as holding addresses for other parameters. For example:
If P3431 = 5 (selects parameter 5 which is Motor Volts = 230V) and P3432=20% **then** Comparator A is true if |P5| = (20/100)*230 ≤ 46V. But if the voltage exceeds 46V, Comparator A is false.

If P3433 = 6 (selects parameter 6 Motor Current = 10 Amps) **then** Comparator B is true if |P6| ≤ 1 Amp.

Any parameter (see Monitor and RTC section in this manual for these values)can be used in a comparator.

Note: Don’t use P3431 and P3433 since this would create a circular reference and the comparator would fail.

Table 7-1 PLC Conditions

Dec	Description	Dec	Description
0	False – This condition is always False	50	Digital Input 1 (J2–9) – If digital input 1 is high this condition is true. (Level sensitive)
1	True – This condition is always True	51	Digital Input 2 (J2–10) – If digital input 2 is high this condition is true. (Level sensitive)
2	Reserved (Workbench – Digital Input)	52	Digital Input 3 (J2–11) – If digital input 3 is high this condition is true. (Level sensitive)
3	Reserved (Workbench – Hard Forward Limit)	53	Digital Input 4 (J2–12) – If digital input 4 is high this condition is true. (Level sensitive)
4	Reserved (Workbench – Hard Reverse Limit)	54	Digital Input 5 (J2–13) – If digital input 5 is high this condition is true. (Level sensitive)
5	Reserved (Workbench – Soft Forward Limit)	55	Digital Input 6 (J2–13) – If digital input 6 is high this condition is true. (Level sensitive)
6	Reserved (Workbench – Soft Reverse Limit)	56	Digital Input 7 (J2–13) – If digital input 7 is high this condition is true. (Level sensitive)
7	Reserved (Workbench – Move Statue)	57	Digital Input 8 (J2–13) – If digital input 8 is high this condition is true. (Level sensitive)
8	Reserved (Workbench – Idle)	58	Drive Run – If the drive is on and has a forward or reverse command this condition is True.
9	Reserved (Workbench – Position achieved)	59	Stop – If motion status is stopped this condition is True.
10	Reserved (Workbench – At target position)	60	Jog – If jog mode is active this condition is True.
11	Reserved (Workbench – In Idle Position Window)	61	Accelerating – If absolute speed demand is accelerating this condition is True.
12	Reserved (Workbench – Following Error Fatal)	62	Constant Speed – If absolute speed demand is constant this condition is True.
13	Reserved (Workbench – Following Error Warning)	63	Decelerating – If absolute speed demand is decelerating this condition is True.
14	At Speed – If the measured speed of the rotor is within the At Speed Band (P1506) of the reference then this condition is True.	64	At Zero Speed – If absolute speed demand is below the Zero Speed Set Point (P1505) this condition is True.
15	Reserved – (Workbench – Velocity Error)	65	At Set Speed – If absolute speed demand is above Set Speed Point (P1507) this condition is True.
16	Velocity Setpoint Minimum – If the measured absolute speed is below the Minimum Output Speed (P2002) then this condition is True.	66	Motor Over Current – If motor RMS current is above the Overload Set Point (P1508) this condition is True.
17	Velocity Setpoint Maximum– If the measured absolute speed is above the Maximum Output Speed (P2003) then this is True.	67	Motor Under Current – If motor RMS current is below the Underload Set Point (P1509) this condition is True.
18	Reserved	68	Keypad Control – If the drive is under keypad control this condition is True.
19	Motor Overload – If the motor's I2T algorithm has exceeded its integral limit this condition is True.	69	Dynamic Brake – If the drive's dynamic brake is on this condition is True.
20	Drive Overload – If the drive's I2T algorithm has exceeded its integral limit this condition is True.	70	Frequency Foldback – If the drive is in frequency foldback this condition is True.

Table 7-1 PLC Conditions Continued

Dec	Description	Dec	Description
21	Motor Direction – If rotor speed is positive this condition is True	71	Alarm – If an alarm is active this condition is True.
22	Command Direction – If speed demand is positive this condition is True	72	Forward – If the drive has a forward command this condition is True.
23	Ready – If soft start is complete, drive hardware enable is on and there are no errors this condition is True.	73	Reverse – If the drive has a reverse command this condition is True.
24	Drive On – If the drive is ready and producing PWM to the motor this condition is True.	74	Process PID Error – If the absolute value of Process PID Error is less than the Process PID Error Tolerance (P2606) this condition is True.
25	Fault – If the drive is faulted for any reason this condition is True.	75	Sleep Mode – If the drive's sleep algorithm has put the drive to sleep this condition is True.
26	Motor Over Temp Trip – If the motor's over temperature trip input has occurred then this condition is True.	76	Comparator A – Monitors a parameter and returns True if the parameter is below a predefined setpoint. NOTE: See section on PLC Comparator Parameters
27	Drive Over Temp Trip – If the drive's over temperature trip input has occurred then this condition is True.	77	Comparator B – Monitors a parameter and returns True if the parameter is below a predefined setpoint. NOTE: See section on PLC Comparator Parameters
28	Drive Over Temp Warning – If the drive's temperature has exceeded that defined for the drive then this condition is True.	78	Parameter Table 1 – If parameter table 1 is active then this condition is True.
29	Reserved (Workbench – home status)	79	Parameter Table 2 – If parameter table 2 is active then this condition is True.
		80	Parameter Table 3 – If parameter table 3 is active then this condition is True.
		81	Parameter Table 4 – If parameter table 4 is active then this condition is True.
		82	Digital Output 1– If digital output 1 is On this condition is True.
		83	Digital Output 2– If digital output 2 is On this condition is True.
		84	Relay Output 1 – If relay output 1 is On this condition is True.
		85	Relay Output 2 – If relay output 2 is On this condition is True.
		86	Timer A – True if Timer A has expired.
		87	Timer B – True if Timer B has expired.
		100	Logical Variable A – Logical variable A is tested for True/False
		101	Logical Variable B – Logical variable B is tested for True/False
		102	Logical Variable C – Logical variable C is tested for True/False
		103	Logical Variable D – Logical variable D is tested for True/False
		110	Place holder for next condition

Table 7-2 PLC Logical Operators

Dec	Description
0	OR
1	AND
2	XOR
3	NOR
4	NAND
5	Reserved

Table 7-3 PLC Actions

Dec	Description	Dec	Description
0	Digital Output 1 – If the input condition is True then Digital Output 1 (J2–17,18) will be active otherwise it is inactive NOTE: Digital output 1 must have been set to “PLC” using P1501	20	Forward Enable/Disable – If the input condition is True forward motion is enabled otherwise it is disabled.
1	Digital Output 2 – If the input condition is True then Digital Output 2 (J2–19,20) will be active otherwise it is inactive NOTE: Digital output 2 must have been set to “PLC” using P1502	21	Reverse Enable/Disable – If the input condition is True reverse motion is enabled otherwise it is disabled.
2	Relay Output 1 – If the input condition is True then Relay Output 1 (J3–25,26,27) will be active otherwise it is inactive NOTE: Relay output 1 must have been set to “PLC” using P1503	22	Acc/Dec Group Select – If the input condition is True then Acc/Dec group 2 is selected otherwise group 1 is selected. NOTE: If this action is not programmed Group 1 is active by default.
3	Reserved (Workbench – Fault)	23	Reset – If the input condition is True a reset request is issued. NOTE: This action is edge triggered on a False ? True transition. NOTE: Pre–existing faults/alarms may or may not be cleared.
4	Drive Enable/Disable – If the condition is True then the drive is capable of producing power. If the condition is False the drive is disabled. NOTE: If not programmed, J2–8 alone enables the drive NOTE: The drive’s hardware enable input (J2–8) must be is active for this action.	24	Preset Speed/Analog – If the input condition is True then the Preset Speed Select Table Index sets the speed reference from the Preset Speeds (P1001–P1015) else the Command Source (P1402) selects the speed reference. NOTE: If this action is not programmed P1402 is always active. NOTE: If the Preset Speed Select Table Index is not programmed then P1001 is used.
5	Jog Reverse – If the condition is True then the motor will jog in the reverse direction at the speed set by P1201 if jogging is enabled. NOTE: If both jog forward and reverse are active the motor stops	25	Preset Speed Select Table Index Bit 0 – If the input condition is True then bit 0 of the Preset Speed Select Table Index is set else it is reset. NOTE: If this action is not programmed then bit 0 is reset.
6	Jog Forward – If the condition is True then the motor will jog in the forward direction at the speed set by P1201 if jogging is enabled. NOTE: If both jog forward and reverse are active the motor stops	26	Preset Speed Select Table Index Bit 1 – If the input condition is True then bit 1 of the Preset Speed Select Table Index is set else it is reset. NOTE: If this action is not programmed then bit 1 is reset.
7	Reserved (Workbench – Hold)	27	Preset Speed Select Table Index Bit 2 – If the input condition is True then bit 2 of the Preset Speed Select Table Index is set else it is reset. NOTE: If this action is not programmed then bit 2 is reset.
8	Stop Enable/Disable – If the input condition is True the motor is stopped.	28	Preset Speed Select Table Index Bit 3 – If the input condition is True then bit 3 of the Preset Speed Select Table Index is set else it is reset. NOTE: If this action is not programmed then bit 3 is reset.
9	Reserved (Workbench – Error Deceleration)	29	Process PID Enable/Disable – If the input condition is True then the Process PID is active otherwise it is inactive. NOTE: The Process PID is automatically set to inactive during keypad control or while jogging.
10	Reserved (Workbench – Cancel)	30	Keypad – If the input condition is True then forward/reverse and stop commands along with the keypad’s local speed reference control the drive. The keypad is disabled by default.
11	Reserved (Workbench – Disable)	31	Electronic Pot – If the input condition is True the Electronic Pot sets the speed reference otherwise it is not active. The pot is disabled by default.
12	Reserved (Workbench – Forced Abort)	32	Decrease Electronic Pot Speed Reference– If the input condition is True the Electronic Pot speed reference is increased else has no affect.. NOTE: E–Pot is non–volatile NOTE: E–Pot is unipolar so direction is determined by forward/reverse commands.
13	Reserved (Workbench – Fast Gear)	33	Increase Electronic Pot Speed Reference– If the input condition is True the Electronic Pot speed reference is decreased else has no affect.. NOTE: E–Pot is non–volatile NOTE: E–Pot is unipolar so direction is determined by forward/reverse commands.
18	Jog Enable – Allows jogging if True else jogging is disabled	34	Parameter Table Select Enable – If the input condition is True enables parameter table selection through the parameter table select index, else parameter table selection is disabled.
19	Fault – If the input condition is True a “PLC Fault” is triggered	35	Parameter Table Select Index Bit 0 – If the input condition is True then bit 0 of the Parameter Table Select Index is set else it is reset. NOTE: If this action is not programmed then bit 0 is reset NOTE: This index sets the active parameter table

Table 7-3 PLC Actions Continued

Dec	Description	Dec	Description
36	Parameter Table Select Index Bit 1 – If the input condition is True then bit 1 of the Parameter Table Select Index is set else it is reset. NOTE: If this action is not programmed then bit 1 is reset NOTE: This index sets the active parameter table	43	Logical Variable D – If the input condition is True then logical variable D is set else reset
37	Relay Output 2 – If the input condition is True then Relay Output 2 (J3–28,29,30) will be active otherwise it is inactive NOTE: Relay Output 2 must have been set to “PLC” using P1504	50	Start Timer A – If the input condition is True zero Timer A else do nothing.
38	Torque/Speed Mode – If the input condition is True then the drive controls torque else it controls speed. Default is speed control. NOTE: For V/F, torque control is not supported and is ignored.	51	Stop Timer A – If the input condition is True, set Timer A= P3440 counts else do nothing
40	Logical Variable A – If the input condition is True then logical variable A is set else reset	52	Start Timer B – If the input condition is True, set Timer B= 0 else do nothing
41	Logical Variable B – If the input condition is True then logical variable B is set else reset	53	Stop Timer B – If the input condition is True, set Timer B= P3441 counts else do nothing.
42	Logical Variable C – If the input condition is True then logical variable C is set else reset		

Table 7-4 Preset Speed Select Index

Dec	Description
0	Preset Speed 1 (P1001)
1	Preset Speed 2 (P1002)
2	Preset Speed 3 (P1003)
3	Preset Speed 4 (P1004)
4	Preset Speed 5 (P1005)
5	Preset Speed 6 (P1006)
6	Preset Speed 7 (P1007)
7	Preset Speed 8 (P1008)
8	Preset Speed 9 (P1009)
9	Preset Speed 10 (P1010)
10	Preset Speed 11 (P1011)
11	Preset Speed 12 (P1012)
12	Preset Speed 13 (P1013)
13	Preset Speed 14 (P1014)
14	Preset Speed 15 (P1015)
15	Zero Speed (Not Defined)

Table 7-5 Parameter Table Select Index

Dec	Description
0	Parameter Table 1 (P52 set to T1)
1	Parameter Table 2 (P52 set to T2)
2	Parameter Table 3 (P52 set to T3)
3	Parameter Table 4 (P52 set to T4)

PLC Programming Examples

PLC Mode as Standard Run Two Wire

This example shows how the PLC Mode may operate as the Standard Run Two Wire Mode. These parameter values are entered from the keypad.

Initialization:

Parameter	Value	Comment
P1401	PLC	PLC operating mode selected

PLC Mode configuration parameters:

Parameter Number	Parameter Dec Value	Byte 3 Condition	Byte 2 Logic	Byte 1 Condition	Byte 0 Action
P3401	050.000.000.020	Input 1 (50)	OR (0)	False (0)	Forward (20)
P3402	051.000.000.021	Input 2 (51)	OR (0)	False (0)	Reverse (21)
P3403	052.000.053.018	Input 3 (52)	OR (0)	Input 4 (53)	Jog Enable (18)
P3404	052.000.000.006	Input 3 (52)	OR (0)	False (0)	Jog Forward (6)
P3405	053.000.000.005	Input 4 (53)	OR (0)	False (0)	Jog Reverse (5)
P3406	054.000.000.022	Input 5 (54)	OR (0)	False (0)	Acc/Dec Group (22)
P3407	055.000.000.024	Input 6 (55)	OR (0)	False (0)	Presets/Analog (24)
P3408	056.000.000.023	Input 7 (56)	OR (0)	False (0)	Reset (23)
P3409	057.003.000.019	Input 8 (57)	NOR (3)	False (0)	Fault (19)

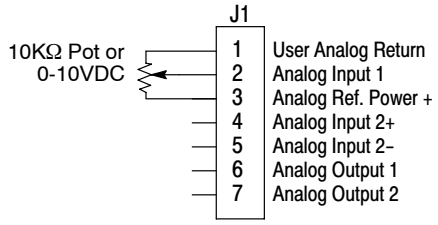

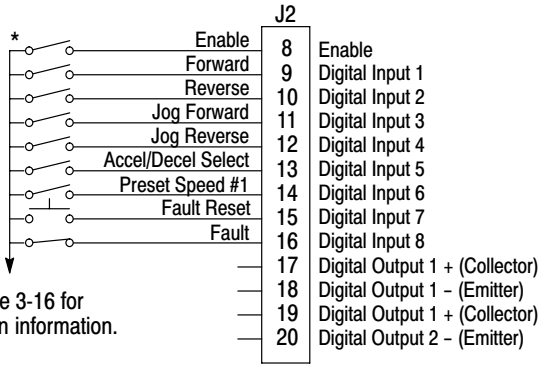

*Note: Remove factory jumper from J2–8 and J3–24 before connecting switch at J2–8.

See recommended tightening torques in Section 7.

See Figure 3-16 for connection information.

The Parameter Dec Value column can be used when entering the PLC configuration parameters at the keypad (parameters are shown as decimal long values – byte3.byte2.byte1.byte0).

For this mode Enable is active.

Note that Preset Speed 1 is active so the Preset Speed Select Table Index need not be programmed since it automatically follows action 24 (Presets/Analog).

Jog is enabled anytime input 3 or 4 is on while these same inputs set the direction for jog.

The Fault action is programmed to trigger whenever digital input 8 goes low.

PLC Programming Examples Continued

PLC Mode as 15 Preset Speed Mode

This example shows how the PLC Mode creates the 15 Preset Speed Mode.

Initialization:

Parameter	Value	Comment
P1401	PLC	PLC operating mode selected

PLC Mode configuration parameters:

Parameter Number	Parameter Dec Value	Byte 3 Condition	Byte 2 Logic	Byte 1 Condition	Byte 0 Action
P3401	050.000.000.020	Input 1 (50)	OR (0)	False (0)	Forward (20)
P3402	051.000.000.024	Input 2 (51)	OR (0)	False (0)	Reverse (21)
P3403	001.000.000.035	True (1)	OR (0)	False (0)	Presets/Analog (24)
P3404	052.000.000.025	Input 3 (52)	OR (0)	False (0)	Preset Tbl Bit 0 (25)
P3405	053.000.000.026	Input 4 (53)	OR (0)	False (0)	Preset Tbl Bit 1 (26)
P3406	054.000.000.027	Input 5 (54)	OR (0)	False (0)	Preset Tbl Bit 2 (27)
P3407	055.000.000.028	Input 6 (55)	OR (0)	False (0)	Preset Tbl Bit 3(28)
P3408	052.001.053.040	Input 3 (52)	AND (1)	Input 4 (53)	Variable A (40)
P3409	054.001.055.041	Input 5 (54)	AND (1)	Input 6 (55)	Variable B (41)
P3410	100.001.101.023	A (100)	AND (1)	B (101)	Reset (23)
P3411	056.000.000.022	Input 7 (56)	OR (0)	False (0)	Acc/Dec Group (22)
P3412	057.003.000.019	Input 8 (57)	NOR (3)	False (0)	Fault (19)

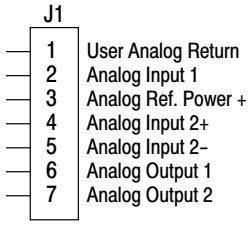

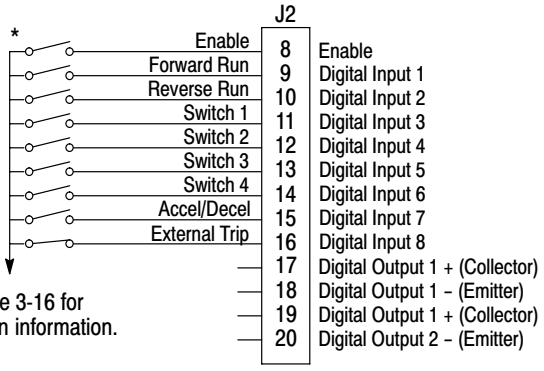

*Note: Remove factory jumper from J2–8 and J3–24 before connecting switch at J2–8.

See recommended tightening torques in Section 7.

See Figure 3-16 for connection information.

The Parameter Dec Value column can be used when entering the PLC configuration parameters at the keypad (parameters are shown as decimal long values – byte3.byte2.byte1.byte0).

For this mode Enable is active.

The unconditional True statement in P3403 always enables the preset speed table, Table 7-4.

Logical variables A and B are used to perform a compound logical “AND” with four inputs to generate a reset command. Note that the order of execution of the statement is important.

The Fault action is programmed to trigger whenever digital input 8 goes low.

PLC Programming Examples Continued

PLC Mode as Process PID Mode

This example shows the PLC Mode rendered as the Process PID Mode.

Initialization:

Parameter	Value	Comment
P1401	PLC	PLC operating mode selected

PLC Mode configuration parameters:

Parameter Number	Parameter Dec Value	Byte 3 Condition	Byte 2 Logic	Byte 1 Condition	Byte 0 Action
P3401	050.000.000.020	Input 1 (50)	OR (0)	False (0)	Forward (20)
P3402	051.000.000.021	Input 2 (51)	OR (0)	False (0)	Reverse (21)
P3403	001.000.000.034	True (1)	OR (0)	False (0)	Param Table Select (34)
P3404	052.000.000.035	Input 3 (52)	OR (0)	False (0)	Table Select Bit 0 (35)
P3405	053.000.000.038	Input 4 (53)	OR (0)	False (0)	Torque/Speed (38)
P3406	054.000.000.029	Input 5 (54)	OR (0)	False (0)	PID (29)
P3407	055.000.000.018	Input 6 (55)	OR (0)	False (0)	Jog Enable (18)
P3408	055.000.000.006	Input 6 (55)	OR (0)	False (0)	Jog Forward (6)
P3409	056.000.000.023	Input 7 (56)	OR (0)	False (0)	Reset (23)
P3410	057.003.000.019	Input 8 (57)	NOR (3)	False (0)	Fault (19)

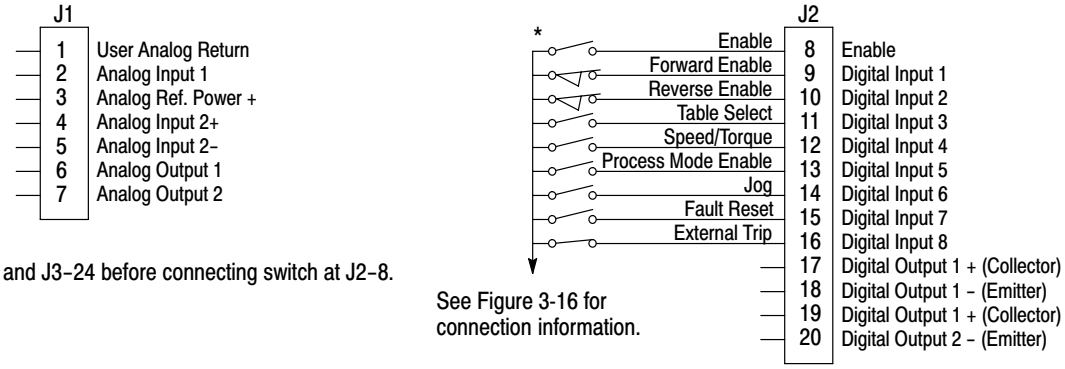

*Note: Remove factory jumper from J2–8 and J3–24 before connecting switch at J2–8.

See recommended tightening torques in Section 7.

See Figure 3-16 for connection information.

The Parameter Dec Value column can be used when entering the PLC configuration parameters at the keypad (parameters are shown as decimal long values – byte3.byte2.byte1.byte0).

For this mode Enable is active.

The unconditional True statement P3403 enables parameter table select (Table 7-5) at all times.

The Fault action is programmed to trigger whenever digital input 8 goes low.

PLC Programming Examples Continued

PLC Mode as a Modified Process PID Mode

This example shows the PLC Mode as a modified Process PID Mode.

Initialization:

Parameter	Value	Comment
P1401	PLC	PLC operating mode selected
P1501	PLC	Digital Output 1 Set by PLC Mode Logic
P3431	10	Comparator A monitors absolute speed demand (P10)
P3432	20%	Comparator A's constant (12 Hz for 60 Hz max)
P3440	3.00 sec	Timer A set for 3 seconds

PLC Mode configuration parameters:

Parameter Number	Parameter Dec Value	Byte 3 Condition	Byte 2 Logic	Byte 1 Condition	Byte 0 Action
P3401	076.000.000.040	Comp A (76)	OR (0)	False (0)	A (40)
P3402	050.000.000.020	Input 1 (50)	OR (0)	False (0)	Forward (20)
P3403	051.000.000.021	Input 2 (51)	OR (0)	False (0)	Reverse (21)
P3404	100.000.000.038	A (100)	OR (0)	False (0)	Torque/Speed (38)
P3405	053.002.100.029	Input 4 (53)	XOR (2)	A (100)	PID (29)
P3406	054.000.055.018	Input 5 (54)	OR (0)	Input 6 (55)	Jog Enable (18)
P3407	054.000.000.006	Input 5 (54)	OR (0)	False (0)	Jog Forward (6)
P3408	055.000.000.005	Input 6 (55)	OR (0)	False (0)	Jog Reverse (5)
P3409	056.000.000.023	Input 7 (56)	OR (0)	False (0)	Reset (23)
P3410	057.000.000.050	Input 8 (57)	OR (0)	False (0)	Start Timer (50)
P3411	086.000.000.019	Timer A (86)	OR (0)	False (0)	Fault (19)

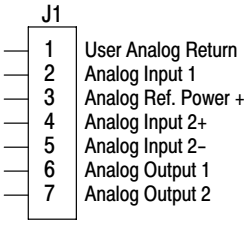

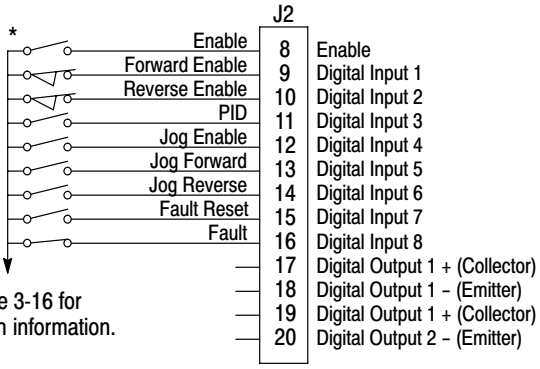

*Note: Remove factory jumper from J2–8 and J3–24 before connecting switch at J2–8.

See recommended tightening torques in Section 7.

See Figure 3-16 for connection information.

The Parameter Dec Value column can be used when entering the PLC configuration parameters at the keypad (parameters are shown as decimal long values – byte3.byte2.byte1.byte0).

For this mode Enable is active.

Use of logical variables A, B, C or D allows for complex PLC logic.

Variable "A" is set based on the outcome of a comparator and then used as an input condition for the torque/speed select and PID actions.

Note that P3401 is programmed to set logical variable "A" before it is used since statements are executed in order from P3401 through P3410.

Either input 5 or 6 enable jog and they also set jog direction as in P3407 and P3408.

Speed mode is active above 12 Hz but torque mode is active when less than 12Hz.

The PID becomes active above 12 Hz if input 4 is ON.

The PID becomes active at less than 12 Hz when input 4 is OFF.

The Fault action is programmed to trigger after a three second delay following digital input 8 going low. Timer A is used to implement this action.

Normally P3410 continuously resets Timer A when digital input 8 is high.

If digital input 8 goes low then high in less than three seconds no fault action occurs since Timer A is reset before it has a chance to timeout.

If digital input 8 goes low and stays low for at least 3 seconds then Timer A does timeout and a fault occurs.

Section 8
H2 Composite Reference Description

Overview

This reference is mathematically computed from any two valid drive parameters. Once configured, it can provide a signal to drive the speed loop, torque loop or process PID. In addition, this reference can drive all existing operating modes including the PLC Mode. Composite Ref can be referenced to any valid input:

P1402 – Command Source	P2310 – Auxiliary Filter Source
P1415 – Current Limit Source	P2603 – Process PID Feedback Source
P1418 – Torque Feedforward Source	P2604 – Process PID Setpoint Source

Mathematical operations are performed at each stage in its development providing the ability to sum, difference, multiply or divide any two parameters to form a complex internal reference source. This reference source can influence the operation of **all** existing operating modes including PLC Mode.

The Composite Reference Parameter Block is programmed in the Level 3, Composite REF parameters.

Figure 8-1 Composite Reference Generator Block Diagram

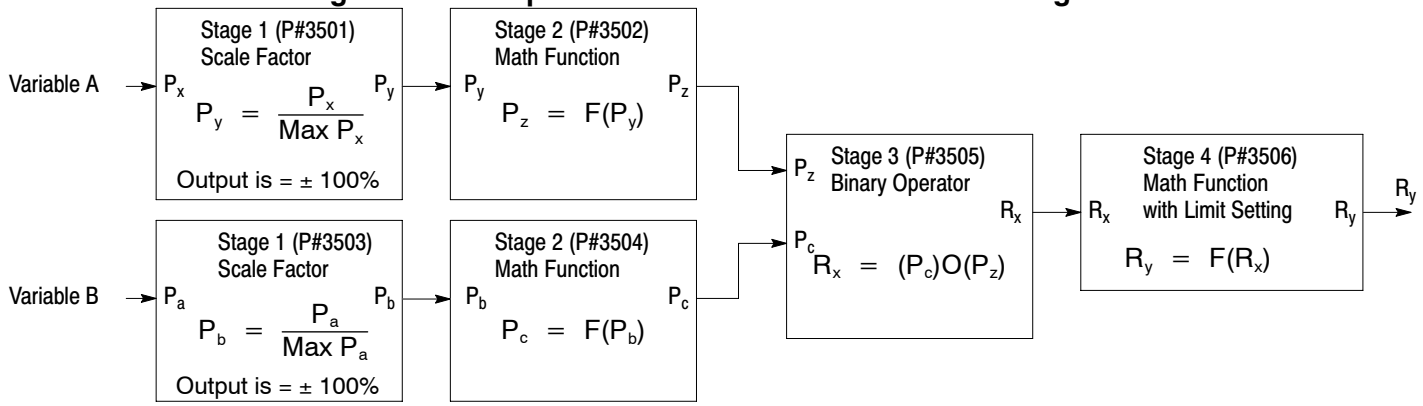

Table 8-1 Math Functions

ID	Function	Description	Notes
0	0	Zero[1]	1. Zero Function, F(x) = 0 2. Identity Function, F(x) = x 3. Where, |x| is the absolute value function: |x|= x for x = 0 |x|=–x for x < 0 4. The ramp generator is computed as follows: 0.0→1.0 for x > 0 Constant output for x = 0 0.0→–1.0 for x < 0 With time period equal to 1.0/(|x|•100) Sec 5. The frequency generator is computed as follows: y = Ramp(x) Freq(x) = Sin(2π•y) With output frequency equal to |x|•100 Hz
1	X	Identity[2]	
2	| X |	Absolute Value	
3	1/X	Inversion	
4	X^2	Square	
5	$\sqrt{\|A\|}$	Square Root[3]	
6	Sin(x)	Sine	
7	Cos(x)	Cosine	
8	Ramp(x)	Ramp Generator[4]	
9	Freq(x)	Frequency Generator[5]	

Table 8-2 Binary Operator Selection Parameter

ID	Function	Description	Notes
0	+	Sum	1. Y = Max(x, y) provides the maximum 2. Y = Min(x, y) provides the minimum
1	–	Difference	
2	•	Multiply	
3	/	Divide	
4	Max	Maximum[1]	
5	Min	Minimum[2]	

Table 8-3 Composite Reference Parameters

Stage #	P#	Description
1	3501 & 3503	Scale Factor – Monitor a parameter number (Variable A or B) and scales the value into percentage of maximum value for use by the next stage. As an example, P3501=5 Motor Voltage (assume its maximum is 230V) is monitored and internally 20% is computed for P5= 46 V or 10% for P5=23 V. Likewise, with P3503=11 then Speed Demand (assume its maximum is 60 Hz) is monitored and 50% is output when P11=30 Hz or –50% when P11= –30 Hz. If P3501 or P3503 can be can be set to any valid drive parameter number. If either is set to an invalid parameter number P_y=0% or P_b=0%. P3501 or P3503 only point to a valid parameter number in the active parameter table, never a parameter outside the active table. Switching parameter tables with the drive enabled causes the Composite Reference to be redefined by the parameter values in the new active parameter table.
2 & 4	3502, 3504 & 3506	Math Function – These parameters select the mathematical functions to be applied at the second and fourth stage of the Composite Reference's derivation. Refer to Table 8-1.
3	3505	Optional Operator – This parameter provides the mathematical operation to be performed at the third stage of the Composite Reference derivation. Refer to Table 8-2.
1	3507 & 3508	These parameters provide a way to scale up or down the percentage calculation of the first stage. They range from 0.001 to 1000.00 with default 1.00. Normally, the defaults work so these parameters need not be change. A simple example of their useis: A 5A motor is connected to a 15A (peak) drive. When the motor is at rated amps only 5/15 or 33.3% is passed on to stage 2, but by setting P3507=3.00, 100% is passed on allowing full use of the motor's current.

Composite Reference Examples

The following table gives examples of the kinds of Composite References that may be developed.

Table 8-4 Examples

Composite Reference Parameters								
P3501	**P3502**	**P3503**	**P3504**	**P3505**	**P3506**	**P3507**	**P3508**	**Description**
P103	Identity	P104	Identity	Sum	Identity	0.5	0.5	Average of Analog Inputs 1&2: $R_y = (A_1+A_2)/2$
P103	Identity	P104	Freq	Multiply	Identity	1.0	1.0	Signal Generator with Magnitude set by A_1 and Frequency by A_2: $R_y = A_1 \cdot Freq(A_2)$
P103	Identity	P104	Identity	Divide	Identity	1.0	1.0	Ratio of Analog Inputs 1&2: $R_y = A_1/A_2$
P102	Square	P104	Square	Difference	Square Root	1.0	1.0	Square Root of Difference of Squares of Process Error and Analog2: $R_y = \sqrt{\lvert P_e^2 - A_2^2 \rvert}$

Monitor Parameters (P0001 to P0202)

Monitor parameters can be viewed using the Workbench software. Most are read only (P0001) but some (P0052) can be written as well.

Table 9-1 Monitor Parameter Descriptions

P#	R/W	Name	Unit	Help
1		SOFTWARE VERSION		Software Version. - Drive firmware version number
2		LOC/REM STATUS		Local/Remote Status. - Source of run/stop commands. Local for keypad or Remove for terminal block
3		DRIVE STATUS		Drive Enable Status. - 0 for disabled, 1 for enabled
4		MOTION STATUS		Motion Status. - Status: stopped, forward, reverse, bipolar, sleep, homing ...
5		MOTOR VOLTS	V	Motor Volts. - Estimated line-to-line drive output RMS voltage
6		MOTOR CURRENT	A	Motor Current. - Measured motor RMS current
7		MOTOR ABS SPEED	RPM	Motor Absolute Speed. - Estimated or measured absolute rotor speed
8		POSITION COUNTER	CNT	Position Counter. - Accumulated count in revolutions and counts. Units: encoder counts
9		SPEED REF	Hz	Speed Reference. - Setpoint speed for motor. Command source parameter determines the source
10		ABS SPEED DEMAND	Hz	Absolute Speed Demand. - Absolute speed output from Speed Profiler.
11		SPEED DEMAND	Hz	Speed Demand. - Signed speed output from Speed Profiler
12		ABS MOTOR FREQ	Hz	Absolute Motor Frequency. - Estimated motor electrical frequency
13		MOTOR FREQ	Hz	Motor Frequency. - Signed motor frequency
14		DRIVE TEMP	°C	Drive Temperature. - Measured temperature of drive heat sink
15		BUS VOLTAGE	V	Bus Voltage. - Measured bus voltage. DC bus high fault occurs above 400/820V DC
16		OVERLOAD LEFT	%	Overload Remaining. - Current overload count remaining until overload fault/foldback occurs
17		INPUTS		Digital Inputs. - State of terminal block digital inputs. Off/On indicated by 0/1
18		OUTPUTS		Digital Outputs. - State of the terminal block digital/relay outputs. Off/On indicated by 0/1
19	R/W	RATED HP	HP	Rated Horsepower. - Drive rated horsepower
20	R/W	RATED CURRENT	A	Rated Current. - Nominal/derated drive continuous RMS current rating
21	R/W	RATED PK CURRENT	A	Rated Peak Current. - Nominal/de-rated drive peak, short term, current rating
22	R/W	RATED VOLTS	V	Rated Voltage. - Nominal voltage rating of drive
23		ACTIVE FAULTS		Active Faults. - Number of active / simultaneous drive faults
24		ACTIVE FLT CODE		Active Fault Code. - Currently active drive fault code number
25		PROC FEEDFORWARD	%	FF Process Feedforward. - Process PID feed forward signal
26		PROC SETPOINT	%	SP Process Setpoint. - Process PID set point signal
27		PROC FEEDBACK	%	FB Process Feedback. - Process PID feedback signal
28		ADC USER REF	V	ADC User Reference. - Hardware ADC reference voltage for analog inputs
29		ADC CURR REF	V	ADC Current Reference. - Hardware ADC reference voltage for currents
30		USER 24V	V	User 24V. - Measured, internally supplied 24V for I/O
31		MOTOR TORQUE	NM	Motor Torque. - Estimated motor torque from measured currents and motor model
32		AUTO-TUNE PROG	%	Auto-Tune Progress. - Estimated progress of auto-tune test
33		LINE VOLTAGE	V	Line Voltage. - Estimated drive input line-to-line RMS voltage
34		RATED A/V	A/V	Rated Amps/Volt. - Nominal drive current scaling set at the factory
35		MOTOR POLES		Motor Poles. - Calculated /entered number of motor poles
36		RUN TIMER	HR	Run Timer. - Accumulated drive run (non-idle) time in hours
37		ACTIVE ALARMS		Active Alarms. - Number of currently active /simultaneous alarms
38		ACT ALARM CODE		Active Alarm Code. - Currently active alarm code
39		ANA IN1	V	Analog Input 1. - Measured value of analog input #1 on terminal input J1-2 and J1-1
40		ANA IN2	V	Analog Input 2. - Measured value of analog input #2 on terminal input J1-4 and J1-5
41		ANA OUT1	V	Analog Output 1. - Estimated value of analog output #1 on terminal J1-6
42		ANA OUT2	V	Analog Output 2. - Estimated value of analog output #2 on terminal J1-7
43		OPTION1		Option 1. - Option board detected in option slot #1 (left slot)
44		OPTION2		Option 2. - Option board detected in option slot #2 (right slot)
45		FEEDBACK		Feedback. - Feedback board detected in motor feedback board slot
46		DATE AND TIME		Current Date and Time. - Real time clock current reading
47		DST STATUS		DST Status. - Daylight Saving Time status: 0=Not Active 1=Active
48		RESERVED 48		Reserved parameter 48. - Not used
49		RESERVED 49		Reserved parameter 49. - Not used
50		RESERVED 50		Reserved parameter 50. - Not used
51		RESERVED 51		Reserved parameter 51. - Not used
52	R/W	ACTIVE PARAM TBL		Active Parameter Table. - Parameter table currently in use on the drive
53		EE VER		Power Base EEPROM Rev. - Power base EEPROM parameter revision number. Set by factory
54		FPGA VER		Power Base FPGA Rev. - Power base FPGA revision control number. Set by factory
55		ACC/DEC DEMAND	Hz/SEC	Accel/Decel Demand. - Current ramp rate used by the velocity profiler

Table 9-1 Monitor Parameter Descriptions Continued

P#	P#	Name	Unit	Help
56		ID CURRENT	A	ID Current. – D axis measured current proportional to motor flux
57		ID DEMAND	A	ID Demand. – D axis demand current proportional to motor flux
58		IQ CURRENT	A	IQ Current. – Q axis measured current proportional to motor torque
59		IQ DEMAND	A	IQ Demand. – Q demand current proportional to motor torque
60		POWER FACTOR		Power Factor. – Ratio of (real power)/(apparent power)
61		PHASE 1 CURRENT	A	Phase 1(U) Current. – Phase U current
62		PHASE 2 CURRENT	A	Phase 2(V) Current. – Phase V current
63		PHASE 3 CURRENT	A	Phase 3(W) Current. – Phase W current
64		VD DEMAND	V	VD Demand. – D axis voltage demand for setting up motor flux
65		VQ DEMAND	V	VQ Demand. – Q axis voltage demand for setting up motor torque
66		ELECTRICAL ANGLE	°	Electrical Angle. – Electrical angle used to develop phased voltages to the motor
67		MOTOR SPEED	RPM	Motor Speed. – Current speed of the motor
68		AT TEST DESC		Autotune Test Description. – Description of current autotuning state
78		EST POWER	kW	Estimated Power. – Drive power output estimated from measured current and voltages. units: KW
79		EST ENERGY	KWH	Estimated Energy. – Output energy delivered by drive. Estimated from measured current and voltages. Units: KHW
80		EST COST	$	Estimated Cost. – Cost of output energy delivered. Estimated from cost of KWH unit parameter
81	R/W	ACCESS KEY		Access Key. – Parameter security access key. Contact Baldor to decode the key code
82	R/W	KEYPAD SOFT VER		Keypad Software Version. – Keypad software version string
89		REFRESH REQUEST		Refresh Request. – Refresh parameter list request from drive to host
90		PHASE 1 VOLTAGE	V	Phase 1(U) Voltage. – Phase U RMS voltage
91		PHASE 2 VOLTAGE	V	Phase 2(V) Voltage. – Phase V RMS voltage
92		PHASE 3 VOLTAGE	V	Phase 3(W) Voltage. – Phase W RMS voltage
93		CUSTOM UNITS	CUSTOM	Custom Units. – Shows production rates according to custom units.
94		POS REFERENCE	CNT	Position Reference. – Position Profiler's Current Target Position.
95		POS DEMAND	CNT	Position Demand. – Position Profiler's Current Position Demand.
96		POS ERROR	CNT	Position Following Error. – Difference Between Position Demand and Rotor Position.
97		POS COUNTER	CNT	Position Counter. – Acutal 32-bit position of the encoder.
98		LV TEST FEEDBACK		LV test feedback. – Gives feedback on state of test
99		LV TEST FE STATE		Front End State. – Gives feedback on state of front end
100		ID		Power Base ID. – Power Base ID Number. Set by factory
101		AUTOTUNE TEST ST		Autotune Test State. – Gives feedback on state of Autotune
102		PROC ERROR	%	ER Process Error. – Process PID error signal
103		ANA1 REF	%	Analog Input 1 Reference. – Reference generated from analog input 1
104		ANA2 REF	%	Analog Input 2 Reference. – Reference generated from analog input 2
105		COMPOSITE REF	%	Composite Reference. – Reference generated composite reference parameter block.
106		POS MOVE STATUS		Position Move Status. – 15 Preset Position Mode status. 0x0=inactive, 0x1-0xF=active, 0x101-0x10F=complete
107	R/W	RTC EDGE COUNTER		RTC Edge Counter. – General purpose date/time edge counter used in Real Time Clock Features.
108	R/W	RTC OUTPUTS		RTC Virtual Outputs. – Outputs set by the RTC and mapped to real outputs if enabled.
109	R/W	RTC MSG STATUS		RTC Message Status. – Individual bits are mapped to RTC message when set
110		LAST POWERDOWN		Last Drive Power Down Date. – The date and time the drive was last turned off.
111	R/W	COMPONENT A	%	Component A of Composite Reference. – First part of the composite reference signal.
112	R/W	COMPONENT B	%	Component B of Composite Reference. – First part of the composite reference signal.
113	R/W	PLC TIMER A		PLC Mode Timer A Counter. – General purpose timer/counter in 10ms clock ticks.
114	R/W	PLC TIMER B		PLC Mode Timer B Counter. – General purpose timer/counter in 10ms clock ticks.
201		LOC SPEED REF	Hz	Local Speed Reference. – Local speed reference from keypad. Reference can be entered in Hz or RPM
202		E-POT SPEED REF	Hz	E-Pot Speed Ref. – Electronic pot speed reference

RTC Overview

The RTC Level Three Parameter Block governs the H2 RTC Features.

Action Module

Action Module parameters P3601 – 3602 set the actions to be scheduled. Action 2 takes priority over action 1 should both be scheduled to trigger within the same second. So, if action 1 turns on output 1 and action 2 turns off output 1 and they both trigger on the same seconds tick, the output 1 will appear as though to never turn on.

As a rule, once an action is taken it is latched until it is reset by another action.

Action Module selections are shown in Table 9-1.

Figure 9-1 RTC Features

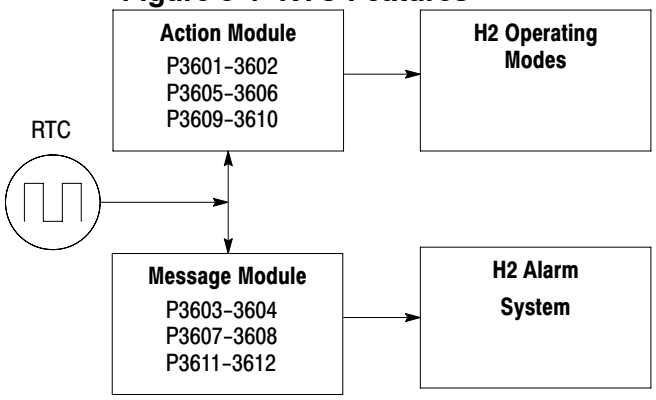

Table 9-1 Actions (P3601 & 3602)

ID	ACTION	DESCRIPTION
0	None	No action assigned. Default setting.
1	Digital Output 1 On	Digital output 1 is turned on. P1501 set to RTC.
2	Digital Output 1 Off	Digital output 1 is turned off. P1501set to RTC
3	Digital Output 2 On	Digital output 2 is turned on. P1502 set to RTC
4	Digital Output 2 Off	Digital output 2 is turned off. P1502 set to RTC
5	Relay Output 1 On	Relay output 1 is turned on. P1503 set to RTC
6	Relay Output 1 Off	Relay output 1 is turned off. P1503 set to RTC
7	Relay Output 2 On	Relay output 2 is turned on. P1504 set to RTC
8	Relay Output 2 Off	Relay output 2 is turned off. P1504 set to RTC
9	Increment P107	Incremented the RTC counter parameter
10	Decrement P107	Decrements the RTC counter parameter
11	Reset P107	Resets the RTC counter parameter
12	Digital Output 1 On with Inc	Performs digital IO with P107 increment
13	Digital Output 1 Off with Inc	Performs digital IO with P107 increment
14	Digital Output 1 On with Dec	Performs digital IO with P107 decrement
15	Digital Output 1 Off with Dec	Performs digital IO with P107 decrement
16	Digital Output 1 On with Reset	Performs digital IO with P107 reset
17	Digital Output 1 Off with Reset	Performs digital IO with P107 reset
18	Relay Output 1 On with Inc	Performs digital IO with P107 increment
19	Relay Output 1 Off with Inc	Performs digital IO with P107 increment
20	Relay Output 1 On with Dec	Performs digital IO with P107 decrement
21	Relay Output 1 Off with Dec	Performs digital IO with P107 decrement
22	Relay Output 1 On with Reset	Performs digital IO with P107 reset
23	Relay Output 1 Off with Reset	Performs digital IO with P107 reset

Level 1, Output Setup Block parameters P1501–P1504 select the digital/relay output functions. P107 is the RTC counter parameter.

Message Module (P3603 – 3604)

Message Module parameters P3603 – 3604 set the messages to be scheduled. Message selections are shown in Table 9-2.

Table 9-2 RTC Message 1&2 Parameters

ID	MESSAGE	HELP TEXT
0	None (default)	No message active
1	Clean Filter(s)	Time to do periodic cleaning of filter(s)
2	Change Filter(s)	Time to change out the filter(s)
3	Apply Oil/Lubricate	Apply oil and/or lubricant necessary areas of the system
4	Service Motor	Check motor cables, encoder, clean motor etc.
5	Service Drive	Check drive cables, clean panels and keypad display etc.
6	Service Coolant System	Check coolant pressures/levels, check for leaks, top off as needed
7	Service Heating System	Check for gas leaks, clean filters, blowers and connections
8	RTC Alarm	Generic real–time clock alarm

RTC Schedule Date Parameters (P3609–3612)

Schedule parameters shown in Table 9-3 set the start date and time of the actions and messages selected.

Table 9-3 Schedule Parameters

ID	QUALIFIERS	DESCRIPTION
0	Once	Action/Message is scheduled once to occur on the date and time entered.
1	Every Second	Action/Message is scheduled every second. Starting on the date and time entered and repeated every second thereafter.
2	Every Minute	Action/Message is scheduled every minute. Starting on the date and time entered and repeated every minute thereafter at the same seconds into the minute specified in the start date and time.
3	Hourly	Action/Message is scheduled hourly. Starting on the date and time entered and repeated every hour thereafter at the same minutes and seconds into the hour as specified in the start date and time.
4	Daily	Action/Message is scheduled Daily. Starting on the date and time entered and repeated every day thereafter at the same hour, minutes and seconds specified in the start date and time. If the day specified does not exist for that month the action/message is skipped.
5	Monthly	Action/Message is scheduled monthly. Starting on the date and time entered and repeated every month thereafter on the same day, hour, minutes and seconds specified in the start date and time.
6	Yearly	Action/Message is scheduled yearly. Starting on the date and time entered and repeated every year thereafter on the same month, day, hour, minutes and seconds in the start date and time.

To each action and message there is an associated start date and time. For **Action 1** (P3609) is used; for **Action 2** (P3610) and for **Messages 1 & 2** (P3611 and P3612) are used respectively.
The internal date and time parameter format is shown in Table 9-4.

Table 9-4 Date and Time Format (P0046)

Bits	31	30	29	28	27	26	25	24	23	22	21	20	19	18	17	16	15	14	13	12	11	10	9	8	7	6	5	4	3	2	1	0
Fields	Year (00–63)						Month (1–12)				Day (1–31)					Hour Bit 5	Hour Bits 4–0 (0–23)				Minutes (0–59)						Seconds (0–59)					

RTC Counter and Maximum Count Parameters (P107 and P3630)

Monitor parameter P107 is a general purpose RTC Counter that can be assigned as the target of a RTC action. This parameter may be incremented, decrement or reset by RTC actions.

Parameter number P3630 sets the maximum for P107, so that:

−P3630 = P107 = P3630.

The comparators A&B of the PLC Operating Mode along with the Composite Reference make use of the maximum setting of a parameter for internal scaling of their operations.

RTC Daylight Saving Time Parameter (P3631)

P3631 has three settings: OFF, U.S.A (United States of America) and E.U. (European Union).

Setting it to OFF disables the DST Feature. Setting it to USA enable Daylight Saving Time for US customers. Setting it to EU enables Daylight Saving Time for Europe based countries.

Power Cycles and RTC Edit Changes

The RTC acts like an alarm clock during power cycles, edit changes and DST (Daylight Saving Time) updates.

After power up, even though an action/message would have occurred during the power down period no action/message is issued, that action/message is lost. The next regularly scheduled action/message will trigger on the next regularly occurring clock edge after power up.

Likewise if the RTC is advanced by some time−offset due to editing or DST action/messages may be lost.

For example, digital output 1 is scheduled to turn on at 1:00 PM daily. At 12:15:00 PM the clock is changed to 1:15:00 PM advancing it an hour. The output will not turn on that day since its triggering edge never occurs.

On the other hand, if the clock is receded by one hour, that is, changed at 1:30:00 PM to 12:30:00 PM then two triggers for digital output 1 on will have been generated that day since the RTC will have passed through 1:00 PM twice.

Furthermore, if an active RTC message is not acknowledged by an operator and power is cycled that message persists after the cycle. The operator must acknowledge an RTC message even if power is cycled.

The same is NOT true for outputs. RTC controlled digital outputs and relays are reset at power up.

RTC Scheduling Examples

The following table gives examples of the kinds scheduled events that may be programmed.

Table 9-5 Schelduled Events Examples

	Action 1	Action 2	Message 1	Message 2
P3601	Digital Out 1 ON			
P3602		Digital Out 1 OFF		
P3603			Change Filters	
P3604				Service Heating System
P3605	Daily			
P3606		Daily		
P3607			Monthly	
P3608				Yearly
P3609	3−Feb−07 01:00:00			
P3610		3−Feb−07 02:00:00		
P3611			10−Jan−06 13:30:00	
P3612				10−Jul−06 13:30:00

For this example assume the drive is in Standard Run Two Wire operating mode with digital output 1 wired to FWD. The drive would then run daily for one hour from 1:00 AM to 2:00 AM starting February 3, 2007.

The same drive is scheduled for monthly and yearly service. Filters are to be changed on the tenth of every month after lunch starting January 10, 2006. In addition, once a year on the 10 of July the heating system is serviced after lunch as well.

RTC messages 1&2 are not logged but must be acknowledged before they are cleared.

RTC Keypad Screens

The following templates shows how these parameters are displayed on the keypad.

	Keypad Screen										
Line 1	Program						Parameter Block Name				
Line 2	Parameter Name										
Line 3	Parameter List Text[1]								Qualifier[1]		
Line 4	Month[1]		Day[1]	,	Year[1]		Hour[1]	:	Minutes[1]	:	Seconds[1]
Line 5	A	Parameter Number						B			

Note 1: Field is editable

Line 1 holds the screen's name and parameter block name. Line 2 holds a parameter name. Line 3 holds list parameter text and the scheduling qualifier. Line 4 holds the date and time. And line 5 holds the A−Function Key name, a parameter number and the B−Function Key name.

Example one:

	Keypad Screen										
Line 1	Prog						RTC				
Line 2	ACTION 1										
Line 3	Digital Output 1 ON								Daily		
Line 4	May		19		2006		01	:	00	:	00
Line 5	Status	C3601T1						Back			

Example two:

	Keypad Screen										
Line 1	Prog						RTC				
Line 2	MESSAGE 1										
Line 3	Change Filter(s)								Monthly		
Line 4	Jul		17		2010		13	:	30	:	00
Line 5	Diag	C3603T1						Back			

Appendix A
Optional Equipment

Dynamic Braking (DB) Hardware Whenever a motor is abruptly stopped or forced to slow down quicker than if allowed to coast to a stop, the motor becomes a generator. This energy appears on the DC Bus of the control and must be dissipated using dynamic braking hardware.

Dynamic braking resistors are completely assembled and mounted in a NEMA 1 enclosure. A listing of available RGA assemblies is provided in Table A-1. Select the braking resistor that has correct ohm value for the control and adequate continuous watts capacity to meet load requirements.

Table A-1 Dynamic Braking Resistor Assemblies (RGA)

Input Volts	HP	Total * Ohms	Continuous Rated Watts						
			600	1200	2400	4800	6400	9600	14200
230	1–7.5	20	RGA620	RGA1220	RGA2420				
	10–20	6		RGA1206	RGA2406	RGA4806			
	25–40	4		RGA1204	RGA2404	RGA4804			
	50–60	2				RGA4802	RGA6402	RGA9602	RGA14202
460	1–3	120	RGA6120	RGA12120	RGA24120				
	5–7.5	60	RGA660	RGA1260	RGA2460	RGA4860			
	10	30	RGA630	RGA1230	RGA2430	RGA4830			
	15–25	20	RGA620	RGA1220	RGA2420	RGA4820			
	30–60	10		RGA1210	RGA2410	RGA4810			
	75–125	4		RGA1204	RGA2404	RGA4804	RGA6404	RGA9604	RGA14204
575	1–3	120	RGA6120	RGA12120	RGA24120				
	5–10	60	RGA660	RGA1260	RGA2460	RGA4860			
	15–25	30	RGA630	RGA1230	RGA2430	RGA4830			
	30	24		RGA1224	RGA2424	RGA4824			
	40–125	14				RGA4814	RGA6414		

* Note: Total Ohms column indicates the minimum resistance that the output transistors can drive. For example, if the Total Ohms column indicates 6 ohms and a 6 ohm resistor is unavailable; an 8 ohm can be used but not a 4 ohm resistor.

Keypad Extension Cable

For the convenience of our customers, we offer a connector plug/cable assembly. This assembly provides the connectors from the keypad to the control for remote keypad operation.

Caution: Only use cables manufactured by Baldor. Cables purchased from other sources may not be properly wired and may damage the control or keypad and void the warranty.

Table A-2 Keypad Extension Cable Selection

Catalog Number	Length
CBLHH015KP	5 ft (1.5m)
CBLHH030KP	10 ft (3.0m)
CBLHH046KP	15 ft (4.6m)
CBLHH061KP	20 ft (6.1m)
CBLHH091KP	30 ft (9.1m)
CBLHH152KP	50 ft (15.2m)
CBLHH229KP	75 ft (22.9m)
CBLHH305KP	100 ft (30.5m)
CBLHH457KP	150 ft (45.7m)
CBLHH610KP	200 ft (61.0m)

Expansion Boards

Baldor offers a wide variety of plug–in expansion boards for the Series H2 Controls. Expansion boards allow a control to be compatible with various inputs and outputs. Each control can accept up to two expansion boards. Section 3 of this manual describes the locations of the connectors for these expansion boards.

Table A-3 Expansion Board Descriptions

Catalog Number	Description
EXBHH001A01 or later	Ethernet Server Expansion Board Uses standard RJ–45 female terminal for ethernet connection. Provides easy connection to any PC based Web Browser that has an Ethernet connection. Allows you to quickly access all drive parameters for setup and review. Download parameter values, operating conditions, and fault log data for review and archive.
EXBHH002A01 or later	Mint® Expansion Board Provides standalone single axis Position Control and is programmable in Mint® language. Position capabilities include Master Axis Follower, Electronic Gearbox, Flying Shears, Registration, Virtual Master, and CAM functions. Uses MINT Workbench V5 for setup and diagnostics. Master encoder input supports differential inputs for A, B and C (Index pulse). Uses DB9 for connection. One CAN open channel is available for connection to additional I/O breakout box or CAN HMI terminal. Connection to PC is by USB1.1 connector. Includes CD Rom and 2m USB cable.
EXBHH003A01 or later	Isolated Input Expansion Board Contains 9 isolated inputs, jumper configurable for 90–130 VAC. All inputs must be the same voltage. One side of all inputs is common. This board replaces all the opto inputs on the main control board. Uses screw terminals for connection.
EXBHH005A01 or later	High resolution analog board Allows two inputs with up to 16 bits resolution. DC inputs: ±10V, 0–10V, ±5V, 0–5V, with 300 microvolt resolution. Current inputs: 4–20 mA, with 0.6 microamps resolution. Input — Resolution ±10 V — 16 bit 0 – 10 V — 15 bit ±5 V — 15 bit 0 – 5 V — 14 bit 0 – 20 mA — 15 bit 4 – 20 mA — 15 bit Both the 0–10 V and 4–20 mA inputs may be inverted to 10–0 V and 20–4 mA. Two outputs, each with ±10 VDC, 0–10 VDC or 4–20 mA with inverting capability. These are in addition to the two analog outputs on the main control board (4 total). Uses screw terminals for connection.
EXBHH007A01 or later	Master Pulse Reference / Isolated Pulse Follower Jumper selection of the following modes: 1. Accepts a 5VDC or 12VDC quadrature pulse train input or pulse and direction input to use as a master reference. 2. Re–transmits the input pulse train at 5VDC for ratios from 1:20 up to 65535:1. (Scaled output). 3. Can be used as a auxiliary encoder input to the control. 4. A CANopen port with an RJ–45 female connector for adding an additional I/O breakout box or CAN HMI terminal.
EXBHH012A01 or later	Ethernet IP Communications Expansion Board Allows connection to Ethernet IP Communications Bus. Uses plug–in terminals for connection.
EXBHH013A01 or later	DeviceNet Expansion Board Allows connection to DeviceNet Communications Bus. Uses plug–in terminals for connection.
EXBHH014A01 or later	Profibus DP Expansion Board Allows connection to Profibus Communications Bus. Uses plug–in terminals for connection.
EXBHH016A01 or later	LonWorks Communications Expansion Board Allows connection to LonWorks Communications Bus. Uses plug–in terminals for connection.

Series H to H2 Conversion

When an existing Series H control is removed and a new Series H2 control is to be installed in it's place, existing wires can be used. These illustrations show how to make the new connections using existing wires. Power and Motor connections are not shown. For more detailed information refer to MN743.

I/O Connections From a Series H to an H2 Control

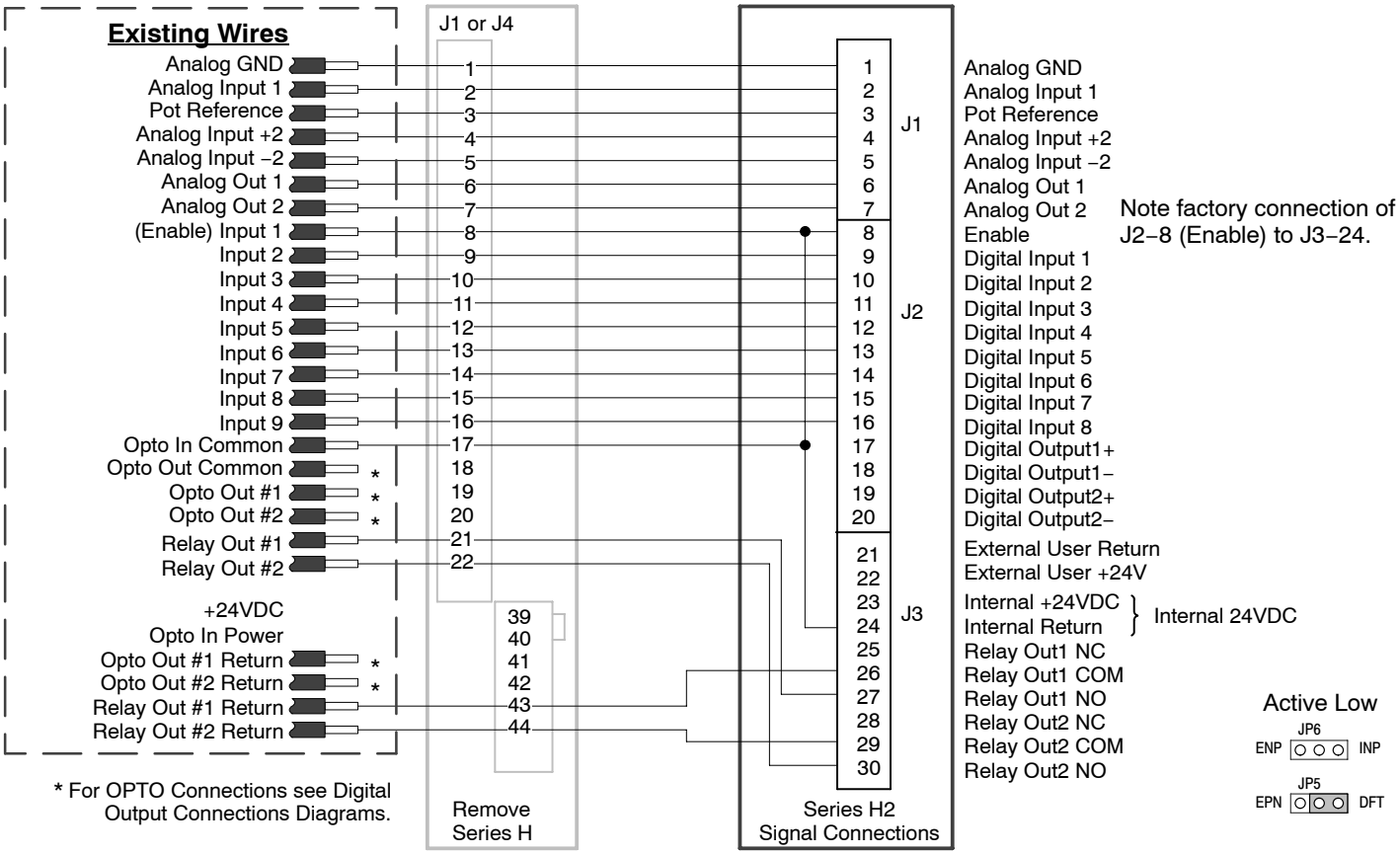

Continued on next page

Digital Output Connections (2 Opto Outputs/2 Relay Outputs)

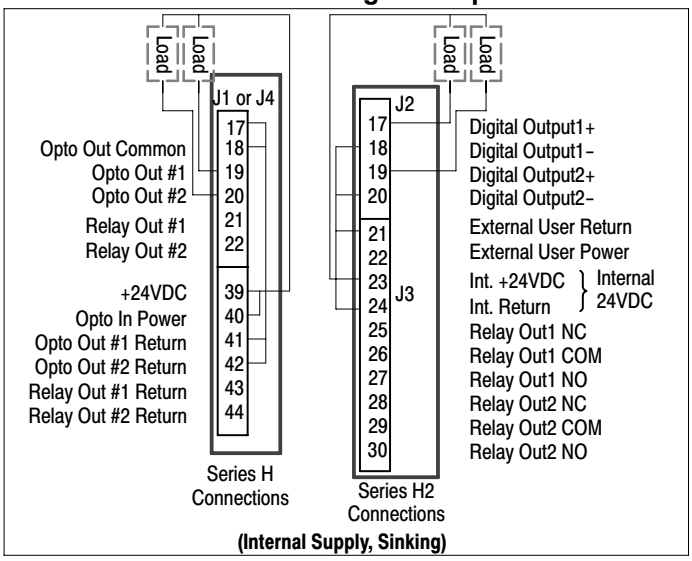

(Internal Supply, Sinking)

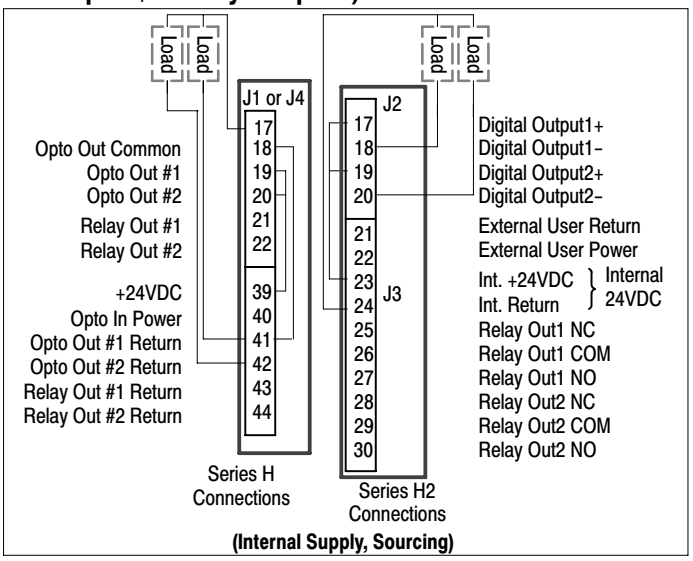

(Internal Supply, Sourcing)

Digital Output Connections (4 Opto Outputs)

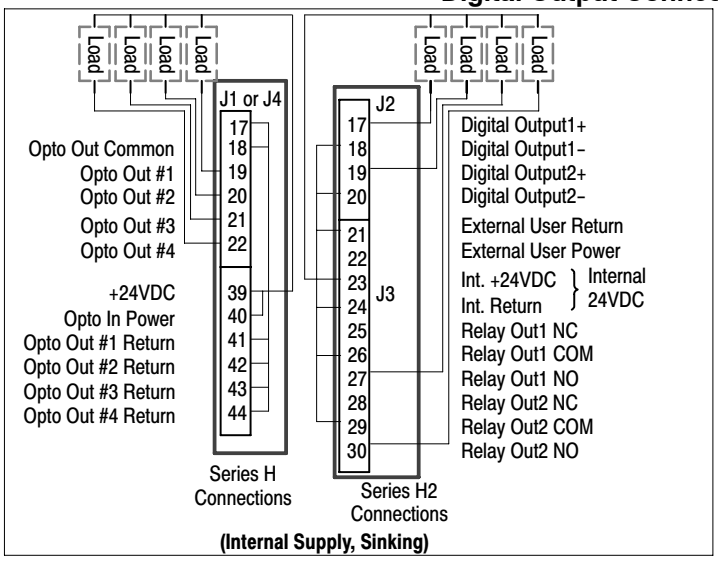

(Internal Supply, Sinking)

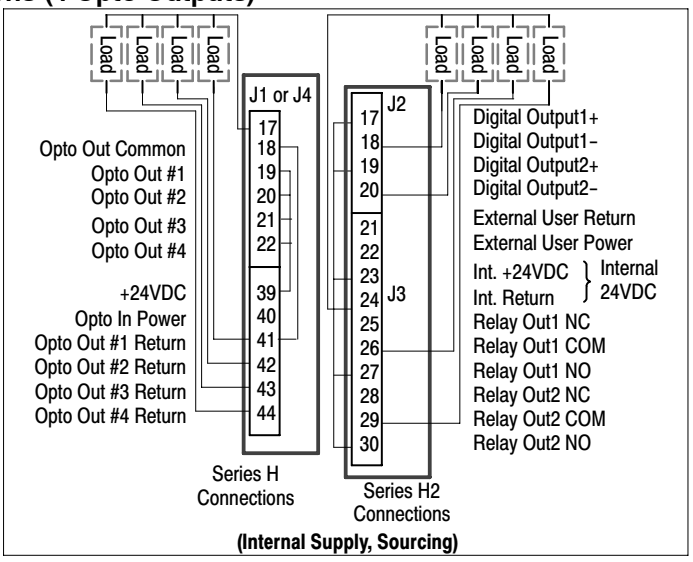

(Internal Supply, Sourcing)

Parameter Values (Version 1.06)

All parameters displayed in this appendix are Parameter Table 1 (T1) factory set values. Setting parameter P2103 to yes will load these values into all four parameter tables.

Level 1 & 2 parameters are secured by security access code (P2107).

Table B-1 Parameter Block Values Level 1

Block Title	Parameter	P#	Adjustable Range	Factory	User Setting
PRESET SPEEDS	PRESET SPEED 1	1001	0-MAX Speed	1	
	PRESET SPEED 2	1002	0-MAX Speed	2	
	PRESET SPEED 3	1003	0-MAX Speed	3	
	PRESET SPEED 4	1004	0-MAX Speed	4	
	PRESET SPEED 5	1005	0-MAX Speed	5	
	PRESET SPEED 6	1006	0-MAX Speed	6	
	PRESET SPEED 7	1007	0-MAX Speed	7	
	PRESET SPEED 8	1008	0-MAX Speed	8	
	PRESET SPEED 9	1009	0-MAX Speed	9	
	PRESET SPEED 10	1010	0-MAX Speed	10	
	PRESET SPEED 11	1011	0-MAX Speed	11	
	PRESET SPEED 12	1012	0-MAX Speed	12	
	PRESET SPEED 13	1013	0-MAX Speed	13	
	PRESET SPEED 14	1014	0-MAX Speed	14	
	PRESET SPEED 15	1015	0-MAX Speed	15	
RAMP RATES	ACCEL TIME 1	1101	0.0 to 3600.0 Seconds	3.0	
	START S-ACCEL 1	1102	0.0-100.0%	0.0	
	END S-ACCEL 1	1103	0.0-100.0%	0.0	
	DECEL TIME 1	1104	0.0 to 3600.0 Seconds	3.0	
	START S-DECEL 1	1105	0.0-100.0%	0.0	
	END S-DECEL 1	1106	0.0-100.0%	0.0	
	ACCEL TIME 2	1107	0.0 to 3600.0 Seconds	3.0	
	START S-ACCEL 2	1108	0.0-100.0%	0.0	
	END S-ACCEL 2	1109	0.0-100.0%	0.0	
	DECEL TIME 2	1110	0.0 to 3600.0 Seconds	3.0	
	START S-DECEL 2	1111	0.0-100.0%	0.0	
	END S-DECEL 2	1112	0.0-100.0%	0.0	
JOG SETTINGS	JOG SPEED	1201	0-MAX Speed	7.00	
	JOG ACCEL TIME	1202	0.0 to 3600.0 Seconds	10.0	
	JOG START S-ACCEL	1203	0.0-100.0%	0.0	
	JOG END S-ACCEL	1204	0.0-100.0%	0.0	
	JOG DECEL TIME	1205	0.0 to 3600.0 Seconds	10.0	
	JOG START S-DECEL	1206	0.0-100.0%	0.0	
	JOG END S-DECEL	1207	0.0-100.0%	0.0	
	JOG FORWARD	1209	0-OFF, 1-ON	1	
	JOG REVERSE	1210	0-OFF, 1-ON	1	

Table B-1 Parameter Block Values Level 1 Continued

Block Title	Parameter	P#	Adjustable Range	Factory	User Setting
KEYPAD SETUP	STOP KEY	1301	0-OFF (Keypad Stop inactive in remote). 1-ON (Keypad Stop active remote).	1	
	STOP MODE	1302	0-Coast, 1-Regen	1	
	RUN FORWARD	1303	0-OFF, 1-ON	1	
	RUN REVERSE	1304	0-OFF, 1-ON	1	
	SWITCH ON FLY	1305	0-OFF, 1-ON	0	
	LOCAL HOT START	1306	0-OFF, 1-ON	0	
	SPEED INCREMENT	1307	0.01 TO 60.00 Hz	1.00	
	INIT LOCAL SPEED	1308	0-Zero, 1-Last Speed, 2-Set Speed	0	
	SET SPEED	1309	0.01 TO 60.00 Hz	1.00	
	PARAMS TO KEYPAD	1310	0-NO, 1-YES	0	
	DOWNLOAD SELECT	1311	0-All, 1-Motor, 2-Other	0	
	KEYPAD TO PARAMS	1312	0-NO, 1-YES	0	
	KEYPAD CONTRAST	1313	0-100% (0=dimmest, 100=brightest)	50	
	BACKLIGHT	1314	0-OFF, 1-ON	1	
	[1] LOCAL TORQUE MODE	1315	0-OFF, 1-ON	0	
	[1] LOCAL TORQUE REF	1316	-100.00 TO 100.00%	0.00	
INPUT SETUP	OPERATING MODE	1401	0-KEYPAD 1-STANDARD RUN 2Wire 2-STANDARD RUN 3Wire 3-15 PRESET SPEEDS 4-FAN&PUMP 2WIRE 5-FAN&PUMP 3WIRE 6-PROCESS CONTROL 7-3SPD ANA 2WIRE 8-3SPD ANA 3WIRE 9-E-POT 2WIRE 10-E-POT 3WIRE 11-NETWORK 12-PROFILE RUN 13-BIPOLAR 14-PLC	0	
	COMMAND SOURCE	1402	0-NONE, 1-ANALOG INPUT1, 2-ANALOG INPUT2, 3-KEYPAD, 4-NETWORK, 5-COMPOSITE, 6-Opt1 Ana In1, 7-Opt1 Ana In2, 8-Opt2 Ana In1, 9-Opt2 Ana In2, 10-EXB Pulse FOL	1	
	ANA IN1 TYPE	1403	0-None, 1-Potentiometer	1	
	ANA IN1 INVERT	1404	0-OFF, 1-ON	0	
	ANA IN1 GAIN	1405	0.0% TO 300.0%	100.0	
	ANA IN1 OFFSET	1406	-100.0% TO 100.0%	0.0	
	ANA IN1 FILTER	1407	0 (No Filter) TO 6 (Max Filter)	0	
	ANA IN2 TYPE	1408	0-None, 1-(-10V to+10V), 2-(-5V to+5V), 3-(4 to20mA), 4-(0 to20mA), 5-(0 to 10V), 6-(0 to 5V)	1	
	ANA IN2 INVERT	1409	0-OFF, 1-ON	0	
	ANA IN2 GAIN	1410	0.0% TO 300.0%	100.0	
	ANA IN2 OFFSET	1411	-100.0% TO 100.0%	0.0	
	ANA IN2 DEADBAND	1412	0.0% TO 75.0%	0.0	
	ANA IN2 FILTER	1413	0 (No Filter) TO 6 (Max Filter)	0	
	[1] EXT. CURRENT LIMIT	1414	0-OFF, 1-ON	0	
	[1] CURRENT LIMIT SOURCE	1415	0-None, 1-Analog In1, 2-Analog In2, 3-Keypad, 4-Composite	0	
	SLEEP MODE	1416	0-OFF, 1-ON	0	
	CMD SLEEP BAND	1417	0.00 TO 100.00%	0.00	
	[1] TORQUE FF SOURCE	1418	0-None, 1-Analog In1, 2-Analog In2, 3-Keypad, 4-Composite	0	

[1] Only available or active in Open Loop Vector mode. Ignore these parameters for V/F mode.

Table B-1 Parameter Block Values Level 1 Continued

Block Title	Parameter	P#	Adjustable Range	Factory	User Setting
OUTPUT SETUP	DIGITAL OUTPUT 1	1501	0-DRIVE RUN 1-DRIVE READY 2-DRIVE ON 3-DRIVE STOPPED 4-JOG 5-ACCELERATE 6-CONSTANT SPEED 7-DECELERATE 8-AT ZERO SPEED 9-AT SPEED 10-AT SET SPEED 11-CURRENT OVERLOAD 12-CURRENT UNDERLOAD 13-I^2T OVERLOAD 14-KEYPAD CONTROL 15-DYNAMIC BRAKE 16-FOLDBACK 17-FAULT 18-ALARM 19-COMMAND FORWARD 20-COMMAND REVERSE 21-MOTOR FORWARD 22-MOTOR REVERSE 23-PROCESS ERROR 24-NETWORK 25-PLC 26-RTC	1	
	DIGITAL OUTPUT 2	1502		8	
	RELAY OUTPUT 1	1503		9	
	RELAY OUTPUT 2	1504		17	
	ZERO SPD SET PT	1505	0-MAX Speed	6.00	
	AT SPEED BAND	1506	0-100 RPM	2.00	
	SET SPEED POINT	1507	0-MAX Speed	60.00	
	OVERLOAD SET POINT	1508	0.0-200.0%	150.0	
	UNDERLOAD SET POINT	1509	0.0-200.0%	50.0	
	ANALOG OUT1 TYPE	1510	0-(0 TO +10V), 1-(0 TO 5V), 2-(4mA TO 20mA), 3-(0mA TO 20mA)	0	
	ANALOG OUT1 SIGNAL	1511	0-SPEED REF 1-SPEED DEMAND 2-ACC/DEC 3-MOTOR CURRENT 4-MAG CURRENT 5-MAG CURRENT COMMAND 6-LOAD CURRENT 7-LOAD CURRENT COMMAND 8-POWER FACTOR 9-PH1 CURRENT 10-PH2 CURRENT 11-PH3 CURRENT 12-MOTOR VOLTAGE 13-VD DEMAND 14-VQ DEMAND 15-BUS VOLTAGE 16-ABS TORQUE 17-TORQUE 18-CONTROL TEMP 19-ANALOG INPUT 1 20-ANALOG INPUT 2 21-OPT1 ANA IN1 22-OPT1 ANA IN2 23-OPT2 ANA IN1 24-OPT2 ANA IN2 25-PROC FEEDFORWARD 26-PROC FEEDBACK 27-PROC SETPOINT 28-ELECTRIC ANGLE 29-ABS SPEED 30-VELOCITY 31-NETWORK 32-COMPOSITE REF 33-CALIBRATE	29	
	ANALOG OUT2 SIGNAL	1514		3	

Table B-1 Parameter Block Values Level 1 Continued

Block Title	Parameter	P#	Adjustable Range	Factory	User Setting
OUTPUT SETUP Continued	ANALOG OUT1 GAIN	1512	0.0-200.0%	100.0	
	ANALOG OUT2 TYPE	1513	0-(+/-5V), 1-(+/-10V)	1	
	ANALOG OUT2 GAIN	1515	0.0-200.0%	100.0	
	CALIBRATE ANALOG OUT	1516	-100.0% TO 100.0%	0.0	
MOTOR CONTROL	CONTROL TYPE	1601	0-V/F Control, 1-Open Vector	0	
	CONTROL BASE SPEED	1602	10.00-500.00 Hz	60.00	
	[2] CONTROL BASE VOLTS	1611	0- Motor Voltage (P2401)	CALC	
	[2] STATIC BOOST	1612	0.0-15.0%	2.0	
	[2] DYNAMIC BOOST CUTIN	1613	6.00-60.00 Hz	30.00	
	[2] DYNAMIC BOOST	1614	0.0-10.0%	0.0	
	[2] V/F EFFICIENCY	1615	0-OFF, 1-ON	0	
	[2] V/F PROFILE	1616	0.0-100.0%	0.0	
	[2] 3 POINT METHOD	1617	0-OFF, 1-ON	0	
	[2] 3 POINT VOLTAGE	1618	0.0-100.0%	0.0	
	[2] 3 POINT FREQUENCY	1619	0.00-60.00 Hz	30.00	
	[2] SLIP COMP ENABLE	1620	0-OFF, 1-ON	0	
	[1] CURRENT PROP GAIN	1633	0-255	CALC	
	[1] CURRENT INT GAIN	1634	0.0-500.00Hz	150.00	
	[1] SPEED PROP GAIN	1635	0.0-255.0	CALC	
	[1] SPEED INT GAIN	1636	0.00-50.00Hz	4.00	
	[1] SPEED DIFF GAIN	1637	0.00-200.00	0.00	
	[1] A.S. PROP GAIN	1639	0.0-255.0	CALC	
	[1] A.S. INTEGRAL GAIN	1640	0.00-200.00Hz	50.00	
	[1] MOTOR Xm	1641	0.00-1000.00 Ohms	CALC	
	[1] MOTOR R1	1642	0.000-1000.000 Ohms	CALC	
	[1] MOTOR X1	1643	0.000-1000.000 Ohms	CALC	
	[1] ROTOR TIME CONSTANT	1644	0.000-60.000 Ohms	CALC	
	[1] MOTOR R2	1645	0-1000 Ohms	CALC	
	[1] MOTOR X2	1646	0-1000 Ohms	CALC	
COMMUNICATION	BAUD RATE	1701	0-9600, 1-19200, 2-38400, 3-56000, 4-115200	1	
	PARITY	1702	0-None, 1-Odd, 2-Even	0	
	STOP BITS	1703	0-One, 1-Two	0	
	DRIVE ADDRESS	1704	1-247	1	
	OPTION CARD RESET	1705	0-OFF, 1-ON	0	
	SECURITY DEFAULT	1706	0-NO, 1-YES	NO	
	BROWSER USER ID	1707		baldor	
	BROWSER PASSWORD	1709		baldor	

[1] Only available or active in Open Loop Vector mode. Ignore these parameters for V/F mode.
[2] Only available or active in V/F mode. Ignore these parameters for Open Loop Vector mode.

Table B-2 Parameter Block Values Level 2

Block Title	Parameter	P#	Adjustable Range	Factory	User Setting
DRIVE LIMITS	OPERATING ZONE	2001	0-STD CONST TORQUE 1-STD VAR TORQUE 2-QUIET CONST TORQUE 3-QUIET VAR TORQUE	0	
	MIN OUTPUT SPEED	2002	0-MAX Speed	0.00	
	MAX OUTPUT SPEED	2003	0.00 TO 500.00 Hz	60.00	
	PWM FREQUENCY	2004	1500 TO 16000 Hz	2500	
	[1] CUR RATE LIMIT	2005	0.000-10.000 seconds	0.004	
	PEAK CURRENT LEVEL	2006	0.000-Peak Rated Current	CALC	
	REGEN TORQUE LIMIT	2007	0.0 to Peak Amps-Mag	CALC	
DRIVE CONFIGURE	SPEED UNITS	2101	0-Hz, 1-RPM	0	
	FACTORY SETTINGS	2103	0-NO, 1-YES	0	
	SECURITY	2105	0-Off, 1-Local, 2-Network, 3-Total	0	
	ACCESS TIMEOUT	2106	1.0-600.0 seconds	5.0	
	ACCESS CODE	2107	0-9999	9999	
	ACTIVE PARAM TABLE	0052	0-T1, 1-T2, 2-T3, 3- T4,	0	
	CLEAR FAULT LOG	2108	0-NO, 1-YES	0	
	[2] DEAD TIME COMP	2109	0.0-100.0%	100.0	
	POWER INPUT	2110	0-Single, 1-Common Bus, 2-Three	2	
DRIVE PROTECT	EXTERNAL TRIP	2201	0-OFF, 1-ON	0	
	[1] FOLLOWING ERROR	2202	0-OFF, 1-ON	0	
	[1] TORQUE PROVING	2203	0-OFF, 1-ON	0	
	[2] FOLDBACK GAIN	2205	0.000-10.000%	0.010	
	OVERLOAD	2206	0-Fault, 1-Foldback, 2-Hold	0	
	[2] OVERLOAD TRIGGER	2207	0.0-100.0%	50.0	
	[3] SINGLE PHASING	2209	0-Derate, 1-Fault	1	
	OVER TEMPERATURE	2210	0-Derate, 1-Fault	1	

[1] Only available or active in Open Loop Vector mode. Ignore these parameters for V/F mode.
[2] Only available or active in V/F mode. Ignore these parameters for Open Loop Vector mode.
[3] Not available for size AA controls.

Table B-2 Parameter Block Values Level 2 Continued

Block Title	Parameter	P#	Adjustable Range	Factory	User Setting
MISCELLANEOUS	AUTO RESTART	2301	0-Manual, 1-Automatic	0	
	RESTARTS/HOUR	2302	0-10	3	
	RESTART DELAY	2303	0-3600 seconds	3	
	PWM TECHNIQUE	2304	0-Space Vector, 1-Sine Triangle	1	
	COST OF ENERGY	2305	0.00-99999.00$/KWH	0.10	
	RESET ENERGY	2306	0-NO, 1-YES	0	
	FILTER TYPE	2309	0-None, 1-Low Pass, 2-High Pass, 3-Notch	0	
	FILTER SOURCE	2310	0-None, 1-Raw Speed, 2-Torque, 3-Analog In1, 4-Analog In2 5-Composite REF 6-OPT1 ANA IN 1, 7-OPT1 ANA IN 2, 8-OPT2 ANA IN 1, 9-OPT2 ANA IN 2	0	
	FILTER DESTINATION	2311	0-None, 1-Speed Loop, 2-Torque Loop, 3-Speed FFWD, 4-Process FBK, 5-Process FFWD, 6-Process SP	0	
	FILTER CUTOFF	2312	0.00-1000.00Hz	0.00	
	NOTCH CENTER FREQ	2313	0.00-500.00Hz	0.00	
	NOTCH BAND	2314	0.00-200.00Hz	0.00	
MOTOR DATA	MOTOR RATED VOLT	2401	0-1000 Volts	CALC	
	MOTOR RATED AMPS	2402	0- AMP	CALC	
	MOTOR RATED SPEED	2403	0-30000 RPM	1754	
	MOTOR RATED FREQUENCY	2404	0.00-120.00Hz	60.00	
	MOTOR MAG AMPS	2405	0-8.6 AMPS	CALC	
	[2] INSTABILITY FREQUENCY	2406	0.00-500.00Hz	20.00	
	[2] STABILITY GAIN	2407	0.000-10.000	0.300	
	[1] ELECTRICAL SLIP FREQ	2412	0.00-20.00Hz	CALC	
	CALCULATE MOTOR MODEL	2414	0-NO, 1-YES	0	
	REVERSE ROTATION	2415	0-OFF, 1-ON	0	

[1] Only available or active in Open Loop Vector mode. Ignore these parameters for V/F mode.
[2] Only available or active in V/F mode. Ignore these parameters for Open Loop Vector mode.

Table B-2 Parameter Block Values Level 2 Continued

Block Title	Parameter	P#	Adjustable Range	Factory	User Setting
BRAKE ADJUST	RESISTOR OHMS	2501	0-255.0 Ohms	CALC	
	RESISTOR WATTS	2502	0-999999 Watts	CALC	
	RESISTOR THERMAL TIME CONSTANT	2503	20–3600 seconds	CALC	
	[2] DC BRAKE VOLTS	2504	0–20.00%	0.00	
	[2] DC BRAKE TRIGGER	2505	0.00–50.00 Hz	0.00	
	[2] BRAKE ON STOP	2506	0–OFF, 1–ON	0	
	[2] BRAKE ON REVERSE	2507	0–OFF, 1–ON	0	
	[2] STOP BRAKE TIME	2508	0.0–60.0 seconds	0.0	
	[2] BRAKE ON START	2509	0–OFF, 1–ON	0	
	[2] START BRAKE TIME	2510	0.0–60.0 seconds	0.0	
PROCESS CONTROL	PROCESS TYPE	2601	0–None, 1–Forward Acting, 2–Reverse Acting	0	
	SETPOINT ADJUST LIMIT	2602	0.0–100.0%	10.0	
	PROCESS FEEDBACK	2603	0–None, 1–Setpoint CMD, 2–Local Speed REF. 3–Analog In1, 4–Analog In2, 5–Network 6–Composite 7–OPT1 ANA IN 1, 7–OPT1 ANA IN 2, 8–OPT2 ANA IN 1, 9–OPT2 ANA IN 2	0	
	SETPOINT SOURCE	2604		0	
	SETPOINT COMMAND	2605	–100.0% to +100.0%	0.0	
	PROCESS ERROR TOLERANCE	2606	0.0-100.0%	10.0	
	PROCESS PROP GAIN	2607	0.0000-9999.9990	1.0000	
	PROCESS INTG GAIN	2608	0.0000-9999.9990	0.0000	
	PROCESS INTG CLAMP	2609	0.0–100.0%	100.0	
	PROCESS DIFF GAIN	2610	0.0000-9999.9990	0.0000	
	PROFILE ADJUST	2611	0–OFF, 1–ON	0	
	PROFILE ADJUST BAND	2612	0.0–200.0%	50.0	
	PROCESS SLEEP BAND	2613	0.0–100.0%	0.0	
	PROCESS OUTPUT FILTER	2614	0.0–100.0 seconds	0.00	
	PROCESS OUTPUT OFFSET	2615	–100.0–100.0%	0.0	
	PROCESS OUTPUT GAIN	2616	0.0–200.0%	100.0	
SKIP FREQUENCY	[2] SKIP FREQ 1	2701	0–MAX Speed	0.00	
	[2] SKIP BAND 1	2702	0–MAX Speed	0.00	
	[2] SKIP FREQ 2	2703	0–MAX Speed	0.00	
	[2] SKIP BAND 2	2704	0–MAX Speed	0.00	
	[2] SKIP FREQ 3	2705	0–MAX Speed	0.00	
	[2] SKIP BAND 3	2706	0–MAX Speed	0.00	

[1] Only available or active in Open Loop Vector mode. Ignore these parameters for V/F mode.
[2] Only available or active in V/F mode. Ignore these parameters for Open Loop Vector mode.

Table B-2 Parameter Block Values Level 2 Continued

Block Title	Parameter	P#	Adjustable Range	Factory	User Setting
SYNCHRO START	[3] SYNC START FWD	2801	0-OFF, 1-ON	0	
	[3] SYNC START REV	2802	0-OFF, 1-ON	0	
	[2] SYNC AT MAX FREQ	2803	0-OFF, 1-ON	1	
	[3] SYNCHRO SCAN V/F	2804	1.0-100.0%	10.0 / 10.0	
	[3] SYNC SETUP TIME	2805	0.0-5.00 seconds	0.20 / 0.10	
	[3] SYNC SCAN TIME	2806	0.5-10.0 seconds	2.0 / 0.50	
	[3] SYNC RECOVER	2807	0.5-10.0 seconds	1.0 / 0.10	
AUTO TUNE	ANALOG OFFSET TRIM	2901	0-NO, 1-YES	0	
	[1] ONE-STEP TUNING	2902	0-NO, 1-YES	0	
	STATOR R1 TUNE	2903	0-NO, 1-YES	0	
	[1] MEASURE XM	2904	0-NO, 1-YES	0	
	[1] MEASURE LEAKAGE	2905	0-NO, 1-YES	0	
	[1] CURRENT LOOP TUNE	2906	0-NO, 1-YES	0	
	[1] FLUX CUR TUNE	2907	0-NO, 1-YES	0	

Table B-3 Parameter Block Values Level 3

Block Title	Parameter	P#	Adjustable Range	Factory	User Setting
PROFILE RUN	NUMBER OF CYCLES	3001	0-255	0	
	PR RESTART MODE	3002	0-Restart, 1-Continue	0	
	SPEED CURVE 1	3003	0-FWD-Group1, 1-REV-Group1, 2-FWD-Group2, 3-REV-Group2	0	
	PROFILE TIME 1	3004	0-65535.00 seconds	0.00	
	SPEED CURVE 2	3005	0-FWD-Group1, 1-REV-Group1, 2-FWD-Group2, 3-REV-Group2	0	
	PROFILE TIME 2	3006	0-65535.00 seconds	0.00	
	SPEED CURVE 3	3007	0-FWD-Group1, 1-REV-Group1, 2-FWD-Group2, 3-REV-Group2	0	
	PROFILE TIME 3	3008	0-65535.00 seconds	0.00	
	SPEED CURVE 4	3009	0-FWD-Group1, 1-REV-Group1, 2-FWD-Group2, 3-REV-Group2	0	
	PROFILE TIME 4	3010	0-65535.00 seconds	0.00	
	SPEED CURVE 5	3011	0-FWD-Group1, 1-REV-Group1, 2-FWD-Group2, 3-REV-Group2	0	
	PROFILE TIME 5	3012	0-65535.00 seconds	0.00	
	SPEED CURVE 6	3013	0-FWD-Group1, 1-REV-Group1, 2-FWD-Group2, 3-REV-Group2	0	
	PROFILE TIME 6	3014	0-65535.00 seconds	0.00	
	SPEED CURVE 7	3015	0-FWD-Group1, 1-REV-Group1, 2-FWD-Group2, 3-REV-Group2	0	
	PROFILE TIME 7	3016	0-65535.00 seconds	0.00	
CUSTOM UNITS	MAX DECIMAL PLACES	3201	0-5	1	
	VALUE AT SPEED	3202	X.X ; YRPM	0.0	
	UNITS OF MEASURE	3203		CUSTOM See Section 4	

[1] Only available or active in Open Loop Vector mode. Ignore these parameters for V/F mode.
[2] Only available or active in V/F mode. Ignore these parameters for Open Loop Vector mode.
[3] Only available or active in V/F or Open Vector mode. Factory settings are different depending on mode (V/F or / Open Vector).
Note: In Open Vector mode, it is recommended that these values remain at the factory settings.

Table B-3 Parameter Block Values Level 3 Continued

Block Title	Parameter	P#	Adjustable Range	Factory	User Setting
PLC MODE	PLC CONFIG 1	3401	0 TO 255.255.255.255	000.128.000.000	
	PLC CONFIG 2	3402	0 TO 255.255.255.255	000.128.000.000	
	PLC CONFIG 3	3403	0 TO 255.255.255.255	000.128.000.000	
	PLC CONFIG 4	3404	0 TO 255.255.255.255	000.128.000.000	
	PLC CONFIG 5	3405	0 TO 255.255.255.255	000.128.000.000	
	PLC CONFIG 6	3406	0 TO 255.255.255.255	000.128.000.000	
	PLC CONFIG 7	3407	0 TO 255.255.255.255	000.128.000.000	
	PLC CONFIG 8	3408	0 TO 255.255.255.255	000.128.000.000	
	PLC CONFIG 9	3409	0 TO 255.255.255.255	000.128.000.000	
	PLC CONFIG 10	3410	0 TO 255.255.255.255	000.128.000.000	
	PLC CONFIG 11	3411	0 TO 255.255.255.255	000.128.000.000	
	PLC CONFIG 12	3412	0 TO 255.255.255.255	000.128.000.000	
	PLC CONFIG 13	3413	0 TO 255.255.255.255	000.128.000.000	
	PLC CONFIG 14	3414	0 TO 255.255.255.255	000.128.000.000	
	PLC CONFIG 15	3415	0 TO 255.255.255.255	000.128.000.000	
	PLC CONFIG 16	3416	0 TO 255.255.255.255	000.128.000.000	
	COMPARE A PARAMETER	3431	00000 TO 10000	0	
	COMPARE A CONSTANT	3432	0.00 TO 100.00%	0.00	
	COMPARE B PARAMETER	3433	00000 TO 10000	0	
	COMPARE B CONSTANT	3434	0.00 TO 100.00%	0.00	
	TIMER A DURATION	3440	0.00 TO 999.99 seconds	0.00	
	TIMER A DURATION	3441	0.00 TO 999.99 seconds	0.00	
COMPOSITE REF	PARAMETER A NUMBER	3501	00000 TO 10000	0	
	PARAMETER B NUMBER	3503	00000 TO 10000	0	
	PARAMETER A FUNCTION	3502	0-ZERO 1-IDENTITY 2-ABSOLUTE VALUE 3-INVERT 4-SQUARE 5-SQUARE ROOT 6-SINE 7-COSINE 8-RAMP GENERATOR 9-FREQ GENERATOR	ZERO	
	PARAMETER B FUNCTION	3504		ZERO	
	FUNCTION	3506		ZERO	
	OPERATOR	3505	0-SUM 1-DIFFERENCE 2-MULTIPLY 3-DIVIDE 4-MAXIMUM 5-MINIMUM	SUM	
	PARAMETER A GAIN	3507	0.000 TO 1000.000	1.000	
	PARAMETER B GAIN	3508	0.000 TO 1000.000	1.000	

Table B-3 Parameter Block Values Level 3 Continued

Block Title	Parameter	P#	Adjustable Range	Factory	User Setting
RTC FEATURES (Real Time Clock)	RTC ACTION 1	3601	0-None, 1-D.Out1 ON, 2-D.Out1 OFF, 3-D.Out2 ON, 4-D.Out2 OFF, 5-R.Out1 ON, 6-R.Out1 Off, 7-R.Out2 ON, 8-R.Out2 Off, 9-Increment, 10-Decrement, 11-Reset, 12-D.Out1 On/IncP107, 13-D.Out1 Off/IncP107, 14-D.Out1 On/DecP107, 15-D.Out1 Off/DecP107, 16-D.Out1 On/Reset, 17-D.Out1 Off/Reset, 18-R.Out1 On/IncP107, 19-R.Out1 Off/IncP107, 20-R.Out1 On/DecP107, 21-R.Out1 Off/DecP107, 22-R.Out1 On/Reset, 23-R.Out1 Off/Reset	None	
	RTC ACTION 2	3602		None	
	RTC MESSAGE 1	3603	0-None, 1-Clean Filter, 2-Change Filter, 3-Apply Oil/Lube, 4-Service Motor, 5-Service Drive, 6-Service Coolant, 7-Service Heating, 8-RTC Alarm	None	
	RTC MESSAGE 2	3604		None	
	ACTION 1 QUALIFIER	3605	0-Once, 1-Second, 2-Minute, 3-Hourly, 4-Daily, 5-Monthly, 6-Yearly	Once	
	ACTION 2 QUALIFIER	3606		Once	
	MESSAGE 1 QUALIFIER	3607		Once	
	MESSAGE 2 QUALIFIER	3608		Once	
	ACTION 1 DATE/TIME	3639	MM DD, YYYY HH:MM:SS	Jan 01,2000 00:00:00	
	ACTION 2 DATE/TIME	3610	MM DD, YYYY HH:MM:SS	Jan 01,2000 00:00:00	
	MESSAGE 1 DATE/TIME	3611	MM DD, YYYY HH:MM:SS	Jan 01,2000 00:00:00	
	MESSAGE 2 DATE/TIME	3612	MM DD, YYYY HH:MM:SS	Jan 01,2000 00:00:00	
	RTC COUNTER MAX	3630	00000-99999	60	
	Daylight Saving Time SELECT	3631	0-OFF, 1-U.S.A, 2-E.U.	OFF	

Appendix C
CE Guidelines

CE Declaration of Conformity

Baldor indicates that the products are only components and not ready for immediate or instant use within the meaning of “Safety law of appliance”, “EMC Law” or “Machine directive”.

The final mode of operation is defined only after installation into the user’s equipment. It is the responsibility of the user to verify compliance.

EMC – Conformity and CE – Marking

The information contained herein is for your guidance only and does not guarantee that the installation will meet the requirements of the council directive 89/336/EEC.

The purpose of the EEC directives is to state a minimum technical requirement common to all the member states within the European Union. In turn, these minimum technical requirements are intended to enhance the levels of safety both directly and indirectly.

Council directive 89/336/EEC relating to Electro Magnetic Compliance (EMC) indicates that it is the responsibility of the system integrator to ensure that the entire system complies with all relative directives at the time of installing into service.

Motors and controls are used as components of a system, per the EMC directive. Hence all components, installation of the components, interconnection between components, and shielding and grounding of the system as a whole determines EMC compliance.

The CE mark does not inform the purchaser which directive the product complies with. It rests upon the manufacturer or his authorized representative to ensure the item in question complies fully with all the relative directives in force at the time of installing into service, in the same way as the system integrator previously mentioned. Remember, it is the instructions of installation and use, coupled with the product, that comply with the directive.

Wiring of Shielded (Screened) Cables

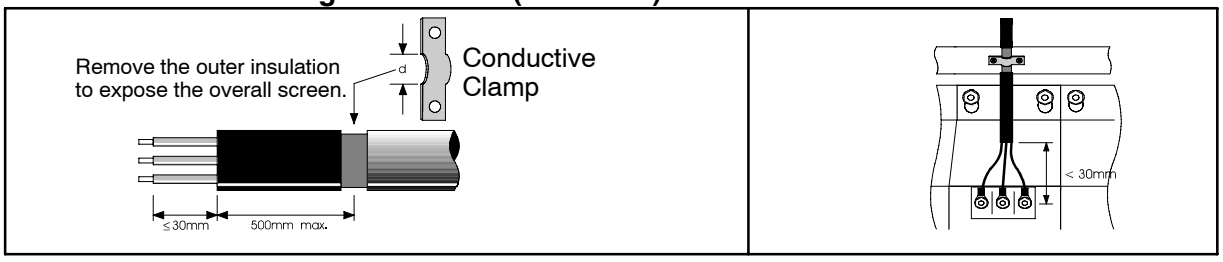

Shielded Couplings

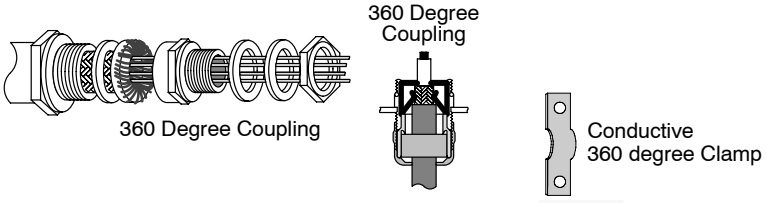

EMC Installation Options

When installed for Class A or Class B operation, the control is compliant with EN55011 (1991)/ EN55022 (1994) for radiated emissions as described.

Grounding for Wall Mounting (Class A) also see Section 3

Top cover must be installed.

- A single–star point (earth) is required.
- The protective earth connection (PE) to the motor must be run inside the screened cable or conduit between the motor and control and be connected to the protective earth terminal at the control.
- The internal/external AC supply filter must be permanently earthed.
- The signal/control cables must be screened.

Grounding for Enclosure Mounting (Class B) also see Section 3

- The unit is installed for Class B operation when mounted inside an enclosure that has 10dB attenuation from 30 to 100MHz (typically the attenuation provided by a metal cabinet with no opening greater than 0.15m), using the recommended AC supply filter and having met all cable requirements.

Note: Radiated magnetic and electric fields inside the cubicle will be high and components installed inside must be sufficiently immune.

- The control, external filter and associated equipment are mounted onto a conducting, metal panel. Do not use enclosures that use insulating mounting panels or undefined mounting structures. Cables between the control and motor must be screened or in conduit and terminated at the control.

Using CE approved components will not guarantee a CE compliant system!

1. The components used in the drive, installation methods used, materials selected for interconnection of components are important.
2. The installation methods, interconnection materials, shielding, filtering and grounding of the system as a whole will determine CE compliance.
3. The responsibility of CE mark compliance rests entirely with the party who offers the end system for sale (such as an OEM or system integrator).

Baldor products which meet the EMC directive requirements are indicated with a “CE” mark. A signed CE declaration of conformity is provided in this section.

EMC Wiring Technique

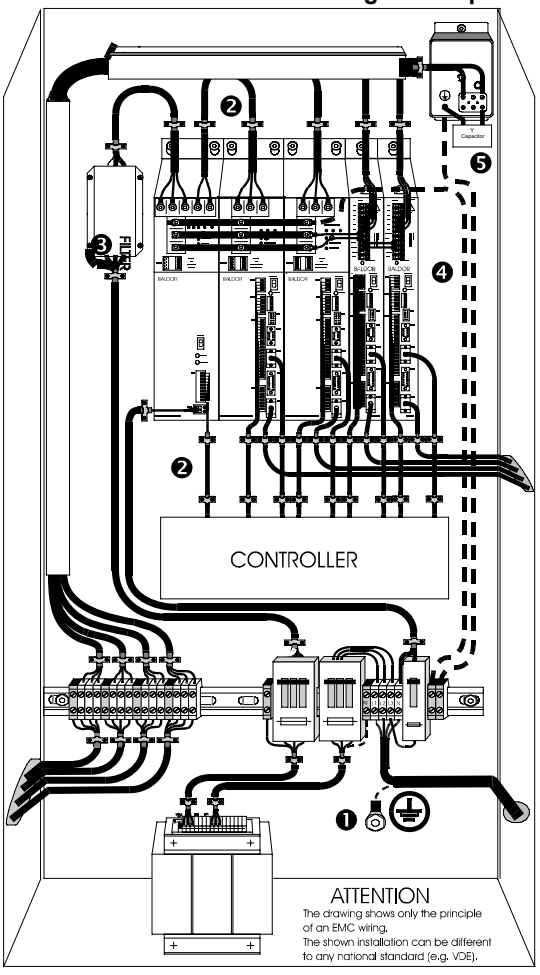

1 **CABINET**
The drawing shows an electroplated zinc coated enclosure, which is connected to ground.
This enclosure has the following advantages:
– All parts mounted on the back plane are connected to ground.
– All shield (screen) connections are connected to ground.
Within the cabinet there should be a spatial separation between power wiring (motor and AC power cables) and control wiring.

2 **SCREEN CONNECTIONS**
All connections between components must use shielded cables. The cable shields must be connected to the enclosure. Use conductive clamps to ensure good ground connection. With this technique, a good ground shield can be achieved.

3 **EMC – FILTER**
The EMI or main filter should be mounted next to the power supply (here BPS). For the connection to and from the main filter screened cables should be used. The cable screens should be connected to screen clamps on both sides. (Exception: Analog Command Signal).

4 **Grounding (Earth)**
For safety reasons (VDE0160), all BALDOR components must be connected to ground with a separate wire. The diameter of the wire must be at minimum AWG#6 (10mm^2). Ground connections (dashed lines) must be made from the central ground to the regen resistor enclosure and from the central ground to the Shared Power Supply.

5 **Y–CAPACITOR**
The connection of the regeneration resistor can cause RFI (radio frequency interference) to be very high. To minimize RFI, a Y–capacitor is used. The capacitor should only be connected between the dynamic brake resistor housing and terminal pin R1 (lead from Lin).

EMC Installation Instructions

To ensure electromagnetic compatibility (EMC), the following installation instructions should be completed. These steps help to reduce interference.
Consider the following:

- Grounding of all system elements to a central ground point
- Shielding of all cables and signal wires
- Filtering of power lines

A proper enclosure should have the following characteristics:

A) All metal conducting parts of the enclosure must be electrically connected to the back plane. These connections should be made with a grounding strap from each element to a central grounding point . [1]

B) Keep the power wiring (motor and power cable) and control wiring separated. If these wires must cross, be sure they cross at 90 degrees to minimize noise due to induction.

C) The shield connections of the signal and power cables should be connected to the screen rails or clamps. The screen rails or clamps should be conductive clamps fastened to the cabinet. [2]

D) The cable to the regeneration resistor must be shielded. The shield must be connected to ground at both ends.

E) The location of the AC mains filter has to be situated close to the drive so the AC power wires are as short as possible.

F) Wires inside the enclosure should be placed as close as possible to conducting metal, cabinet walls and plates. It is advised to terminate unused wires to chassis ground. [1]

G) To reduce ground current, use at least a 10mm^2 (6 AWG) solid wire for ground connections.

[1] Grounding in general describes all metal parts which can be connected to a protective conductor, e.g. housing of cabinet, motor housing, etc. to a central ground point. This central ground point is then connected to the main plant (or building) ground.

[2] Or run as twisted pair at minimum.

Example Cable Screens Grounding

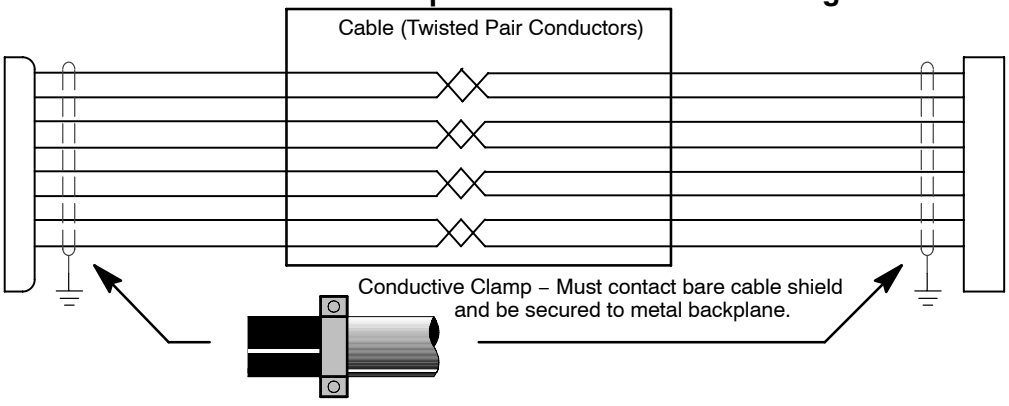

Baldor Electric Company
P.O. Box 2400
Fort Smith, Arkansas 72902
(479) 646−4711

Date: 10/5/2005

EC Declaration of Conformity

Ref: DE00013−001

This is to certify that Baldor inverter products comply with the requirements of the CE Directive below and being one of:−

H2 V/Hz Family (IHH) H2 Closed Vector Family (ZHH)

When used in accordance with the guidance and instructions given in the corresponding Product Installation Manual, the above Electronic Products conform with the protection requirements of Council Directive 89/336/EEC and amended by 92/31/EEC and 93/68/EEC, Article 10 and Annex 1, relating to the EMC Directive and Manufacturers Declaration for EMC, by the application of the relevant clauses of the following standards:−

Standard	EMC Directive	Manufacturers Declaration
BSEN61800−3 : 1996 + A11 (2000)	✓	✓
BSEN61000−3−2: 1995	✓	✓

And with the protection requirements of Council Directive 72/23/EEC (amended by 93/68/EEC) article 13 and Annex III relating to Low Voltage Equipment, by following the guidance found in the relevant clauses of the following standard:−

Standard	Title
EN50178: 1997	Electronic equipment for use in power installations

Machinery Directive

The above Electronic Products are components to be incorporated into machinery and may not be operated alone. The complete machinery or installation using this equipment may only be put in to service when the safety considerations of the Directive 89/392/EEC are fully adhered to. Particular reference should be made to EN60204−1 (Safety of Machinery – Electrical Equipment of Machines).
All instructions, warnings and safety information of the Product Installation Manual must be adhered to.

Signed:

David Benson
Engineering Manager

Remote Keypad Mounting Template

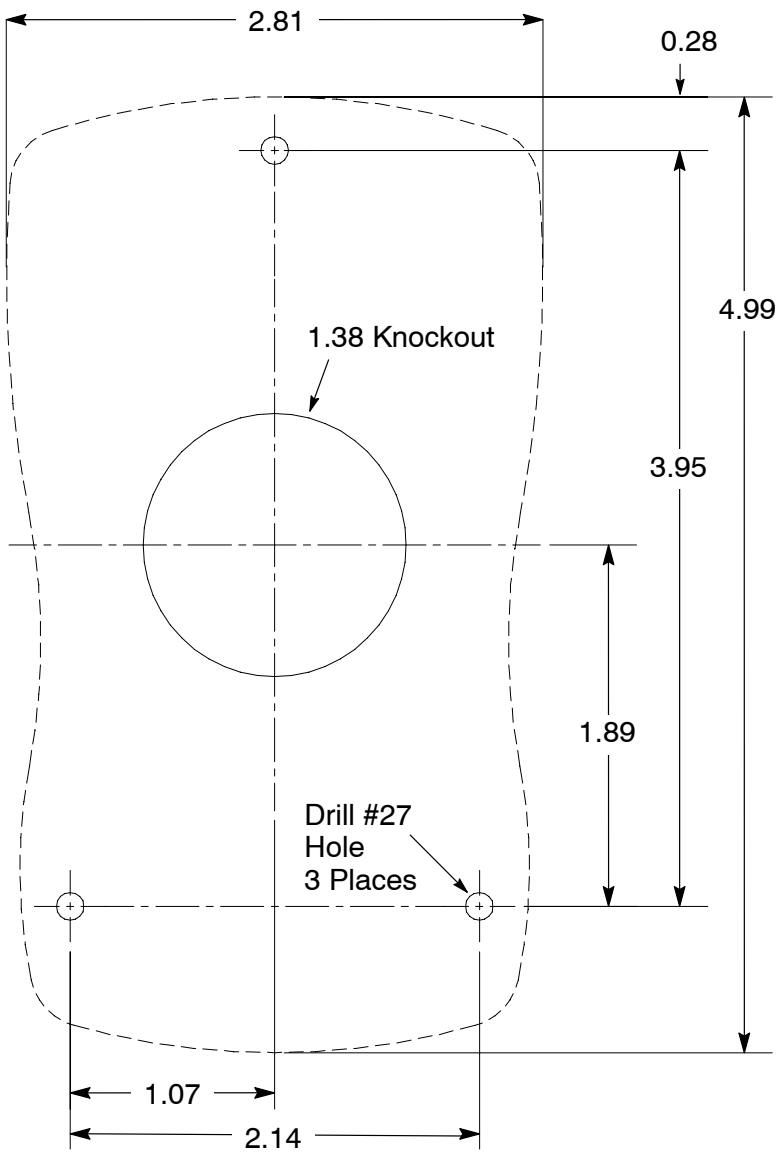

KP0030A00

Note: Template may be distorted due to reproduction.

Baldor District Offices

UNITED STATES

ARIZONA
PHOENIX
4211 S 43RD PLACE
PHOENIX, AZ 85040
PHONE: 602-470-0407
FAX: 602-470-0464

ARKANSAS
CLARKSVILLE
1001 COLLEGE AVE.
CLARKSVILLE, AR 72830
PHONE: 479-754-9108
FAX: 479-754-9205

CALIFORNIA
LOS ANGELES
6480 FLOTILLA
COMMERCE, CA 90040
PHONE: 323-724-6771
FAX: 323-721-5859

HAYWARD
21056 FORBES STREET
HAYWARD, CA 94545
PHONE: 510-785-9900
FAX: 510-785-9910

COLORADO
DENVER
2520 W BARBERRY PLACE
DENVER, CO 80204
PHONE: 303-623-0127
FAX: 303-595-3772

CONNECTICUT
WALLINGFORD
65 SOUTH TURNPIKE ROAD
WALLINGFORD, CT 06492
PHONE: 203-269-1354
FAX: 203-269-5485

FLORIDA
TAMPA/PUERTO RICO/
VIRGIN ISLANDS
3906 EAST 11TH AVENUE
TAMPA, FL 33605
PHONE: 813-248-5078
FAX: 813-247-2984

GEORGIA
ATLANTA
62 TECHNOLOGY DR.
ALPHARETTA, GA 30005
PHONE: 770-772-7000
FAX: 770-772-7200

ILLINOIS
CHICAGO
1601 FRONTENAC ROAD
NAPERVILLE, IL 60563
PHONE: 630-848-5100
FAX: 630-848-5110

INDIANA
INDIANAPOLIS
5525 W. MINNESOTA STREET
INDIANAPOLIS, IN 46241
PHONE: 317-246-5100
FAX: 317-246-5110
800-428-4141

IOWA
DES MOINES
1800 DIXON STREET, SUITE C
DES MOINES, IA 50316
PHONE: 515-263-6929
FAX: 515-263-6515

MARYLAND
BALTIMORE
6660 SANTA BARBARA RD.
SUITE 22-24
ELKRIDGE, MD 21075
PHONE: 410-579-2135
FAX: 410-579-2677

MASSACHUSETTS
BOSTON
6 PULLMAN STREET
WORCESTER, MA 01606
PHONE: 508-854-0708
FAX: 508-854-0291

MICHIGAN
DETROIT
33782 STERLING PONDS BLVD.
STERLING HEIGHTS, MI 48312
PHONE: 586-978-9800
FAX: 586-978-9969

GRAND RAPIDS
668 3 MILE ROAD NW
GRAND RAPIDS, MI 49504
PHONE: 616-785-1784
FAX: 616-785-1788

MINNESOTA
MINNEAPOLIS
21080 134TH AVE. NORTH
ROGERS, MN 55374
PHONE: 763-428-3633
FAX: 763-428-4551

MISSOURI
ST LOUIS
422 INDUSTRIAL DRIVE
MARYLAND HEIGHTS, MO 63043
PHONE: 314-298-1800
FAX: 314-298-7660

KANSAS CITY
1501 BEDFORD AVENUE
NORTH KANSAS CITY, MO 64116
PHONE: 816-587-0272
FAX: 816-587-3735

NEW YORK
AUBURN
ONE ELLIS DRIVE
AUBURN, NY 13021
PHONE: 315-255-3403
FAX: 315-253-9923

NORTH CAROLINA
GREENSBORO
1220 ROTHERWOOD ROAD
GREENSBORO, NC 27406
P O BOX 16500
GREENSBORO, NC 27416
PHONE: 336-272-6104
FAX: 336-273-6628

OHIO
CINCINNATI
2929 CRESCENTVILLE ROAD
WEST CHESTER, OH 45069
PHONE: 513-771-2600
FAX: 513-772-2219

CLEVELAND
8929 FREEWAY DRIVE
MACEDONIA, OH 44056
PHONE: 330-468-4777
FAX: 330-468-4778

OKLAHOMA
TULSA
2 EAST DAWES
BIXBY, OK 74008
PHONE: 918-366-9320
FAX: 918-366-9338

OREGON
PORTLAND
20393 SW AVERY COURT
TUALATIN, OR 97062
PHONE: 503-691-9010
FAX: 503-691-9012

PENNSYLVANIA
PHILADELPHIA
1035 THOMAS BUSCH
MEMORIAL HIGHWAY
PENNSAUKEN, NJ 08110
PHONE: 856-661-1442
FAX: 856-663-6363

PITTSBURGH
616H BEATTY ROAD
MONROEVILLE, PA 15146
PHONE: 412-380-7244
FAX: 412-380-7250

TENNESSEE
MEMPHIS
4000 WINCHESTER ROAD
MEMPHIS, TN 38118
PHONE: 901-365-2020
FAX: 901-365-3914

TEXAS
HOUSTON
4647 PINE TIMBERS
SUITE # 135
HOUSTON, TX 77041
PHONE: 713-895-7062
FAX: 713-690-4540

DALLAS
3040 QUEBEC
DALLAS, TX 75247
PHONE: 214-634-7271
FAX: 214-634-8874

UTAH
SALT LAKE CITY
2230 SOUTH MAIN STREET
SALT LAKE CITY, UT 84115
PHONE: 801-832-0127
FAX: 801-832-8911

WISCONSIN
MILWAUKEE
2725 SOUTH 163RD STREET
NEW BERLIN, WI 53151
PHONE: 262-784-5940
FAX: 262-784-1215

INTERNATIONAL SALES

FORT SMITH, AR
P.O. BOX 2400
FORT SMITH, AR 72902
PHONE: 479-646-4711
FAX: 479-648-5895

CANADA
EDMONTON, ALBERTA
4053-92 STREET
EDMONTON, ALBERTA T6E 6R8
PHONE: 780-434-4900
FAX: 780-438-2600

OAKVILLE, ONTARIO
2750 COVENTRY ROAD
OAKVILLE, ONTARIO L6H 6R1
PHONE: 905-829-3301
FAX: 905-829-3302

MONTREAL, QUEBEC
1844 WILLIAM STREET
MONTREAL, QUEBEC H3J 1R5
PHONE: 514-933-2711
FAX: 514-933-8639

VANCOUVER,
BRITISH COLUMBIA
1538 KEBET WAY
PORT COQUITLAM, BC V3C 5M5
PHONE 604-421-2822
FAX: 604-421-3113

WINNIPEG, MANITOBA
54 PRINCESS STREET
WINNIPEG, MANITOBA R3B 1K2
PHONE: 204-942-5205
FAX: 204-956-4251

AUSTRALIA
UNIT 3, 6 STANTON ROAD
SEVEN HILLS, NSW 2147,
AUSTRALIA
PHONE: (61) (2) 9674 5455
FAX: (61) (2) 9674 2495

UNIT 8, 5 KELLETTS ROAD
ROWVILLE, VICTORIA, 3178
AUSTRALIA
PHONE: (61) (3) 9753 4355
FAX: (61) (3) 9753 4366

AMÉRICA DEL SUR
APTDO. 9109 0818 ZONA 6
BETHANIA,
CIUDAD DE PANAMÁ, PANAMÁ
PHONE: +507 261-5347
FAX: +507 261-5355

CENTRO AMÉRICA Y CARIBE
RESIDENCIAL PINARES DE SUIZA
POL. 15 #44,
NVA. SAN SALVADOR, EL SALVADOR
PHONE: +503 2288-1519
FAX: +503 2288-1518

CHINA
SHANGHAI JIAHUA BUSINESS CENTER
ROOM NO. A-8421
808 HONG QIAO ROAD
SHANGHAI 200030
PHONE: 86-21-64473060
FAX: 86-21-64078620

GERMANY
DIESELSTRASSE 22
D-85551 KIRCHHEIM
MUNICH, GERMANY
PHONE: (49) (89) 90508 0
FAX: (49) (89) 90508 492

INDIA
14, COMMERCE AVENUE
MAHAGANESH COLONY
PAUD ROAD
PUNE - 411 038
MAHARASHTRA, INDIA
PHONE: 91 20 25 45 95 30
FAX: 91 20 5 4 95 30

ITALY
BALDOR ASR AG
SUCCURSALE DI MENDRISIO
VIA BORROMINI, 20A
CH-6850 MENDRISIO
SWITZERLAND
PHONE: 41 91 640 9952
FAX: 41 91 630 2633

JAPAN
DIA BLDG 802,
2-21-1 TSURUYA-CHO,
KANAGAWA-KU
YOKOHAMA, 221-0835, JAPAN
PHONE: 81-45-412-4506
FAX: 81-45-412-4507

KOREA
ROOM 208-37
INCHEON INDUSTRIAL GOODS
CIRCULATING CENTER
SONGHYEON 3-DONG, DONG-GU
INCHEON. KOREA, 401-705
PHONE: 82 32 588 3253
FAX: 82 32 588 3254

MÉXICO
KM. 2.0 BLVD. AL AEROPUERTO
LEÓN 37545, GUANAJUATO,
MÉXICO
PHONE: 52 477 761 2030
FAX: 52 477 761 2010

MIDDLE EAST & NORTH AFRICA
VSE INTERNATIONAL CORP.
3233 NORTH ARLINGTON HEIGHTS
SUITE 100W
ARLINGTON HEIGHTS, IL 60004
PHONE: 847 590 5547

SINGAPORE
51 KAKI BUKIT ROAD 2
K B WAREHOUSE COMPLEX
SINGAPORE 417863
PHONE: (65) 6 744 2572
FAX: (65) 6 747 1708

SWITZERLAND
POSTFACH 73
SCHUTZENSTRASSE 59
CH-8245 FEUERTHALEN
SWITZERLAND
PHONE: (41) (52) 6474700
FAX: (41) (52) 6592394

TAIWAN
4F, NO. 25, SEC. 1,
TUNHUA S ROAD,
TAIPEI 10557, TAIWAN, R.O.C.
PHONE: (886-2) 2577-4352
FAX: (886-2) 2577-4157

UNITED KINGDOM
6 BRISTOL DISTRIBUTION PARK
HAWKLEY DRIVE
BRISTOL BS32 0BF U.K.
PHONE: 44 1454 859000
FAX: 44 1454 8590019

Important:
Be sure to check **www.baldor.com** for the latest software, firmware and drivers for your H2 product.

740-706

BALDOR ELECTRIC COMPANY
P.O. Box 2400
Ft. Smith, AR 72902–2400
(479) 646–4711
Fax (479) 648–5792
www.baldor.com

© Baldor Electric Company
MN740

Printed in USA
7/06