EMERSON
Industrial Automation

User Guide

Unidrive SP
Elevator Solution Software

Variable Speed AC Drive for induction and servo motors

Part Number: 0471-0073-04
Issue: 4

DRIVE CENTRE
Industrial Automation Systems Integrators

57 Galaxy Blvd., Units 1 & 2, Toronto, ON M9W 5P1
TEL: (416) 231-6767
www.drivecentre.ca

CONTROL TECHNIQUES

www.controltechniques.com

General Information

The manufacturer accepts no liability for any consequences resulting from inappropriate, negligent or incorrect installation or adjustment of the optional operating parameters of the equipment or from mismatching the variable speed drive with the motor.

The contents of this guide are believed to be correct at the time of printing. In the interests of a commitment to a policy of continuous development and improvement, the manufacturer reserves the right to change the specification of the product or its performance, or the contents of the guide, without notice.

Drives software version

This product is supplied with the latest software version. If this drive is to be connected to an existing system or machine, all drive software versions should be verified to confirm the same functionality as drives of the same model already present. This may also apply to drives returned from a Control Techniques Service Centre or Repair Centre.

The software version of the drive can be checked by looking at Pr **11.29** and Pr **11.34**. i.e. for software version 01.01.00, Pr **11.29** = 1.01 and Pr **11.34** displays 0. The software version takes the form of xx.yy.zz where Pr **11.29** displays xx.yy and Pr **11.34** displays zz. If there is any doubt please contact the supplier of the product.

Elevator Solution Software version

The Elevator Solution Software version and identity number for the Solutions Module can be viewed in Pr **20.01** *Software version* and Pr **20.02** *Software identity number*.

If there is any doubt, contact a Control Techniques Drive Centre.

Environmental statement

Control Techniques is committed to minimising the environmental impacts of its manufacturing operations and of its products throughout their life cycle. To this end, we operate an Environmental Management System (EMS) which is certified to the International Standard ISO 14001. Further information on the EMS, our Environmental Policy and other relevant information is available on request, or can be found at www.greendrives.com.

The electronic variable-speed drives manufactured by Control Techniques have the potential to save energy and (through increased machine/process efficiency) reduce raw material consumption and scrap throughout their long working lifetime. In typical applications, these positive environmental effects far outweigh the negative impacts of product manufacture and end-of-life disposal.

Nevertheless, when the products eventually reach the end of their useful life, they can very easily be dismantled into their major component parts for efficient recycling. Many parts snap together and can be separated without the use of tools, while other parts are secured with conventional screws. Virtually all parts of the product are suitable for recycling.

Product packaging is of good quality and can be re-used. Large products are packed in wooden crates, while smaller products come in strong cardboard cartons which themselves have a high recycled fibre content. If not re-used, these containers can be recycled. Polythene, used on the protective film and bags for wrapping product, can be recycled in the same way. Control Techniques' packaging strategy favours easily-recyclable materials of low environmental impact, and regular reviews identify opportunities for improvement.

When preparing to recycle or dispose of any product or packaging, please observe local legislation and best practice.

REACH legislation

EC Regulation 1907/2006 on the Registration, Evaluation, Authorisation and restriction of Chemicals (REACH) requires the supplier of an article to inform the recipient if it contains more than a specified proportion of any substance which is considered by the European Chemicals Agency (ECHA) to be a Substance of Very High Concern (SVHC) and is therefore listed by them as a candidate for compulsory authorisation.

For current information on how this requirement applies in relation to specific Control Techniques products, please approach your usual contact in the first instance. Control Techniques position statement can be viewed at:

http://www.controltechniques.com/REACH

Issue Number: 4

How to use this guide

This user guide provides detailed information on the Elevator Solution Software used with Unidrive SP with the SM-Applications / SM-Applications Lite.

The information is in logical order, taking the user through the features of the software to set-up and optimization.

NOTE

There are specific safety warnings in Chapter 1 *Safety information* . It is essential that the warnings are observed and the information considered when working with or designing a system using the Unidrive SP.

NOTE

This manual should be read in line with the *Unidrive SP User Guide*.

The following map of the user guide helps in finding the correct sections for the task you wish to complete:

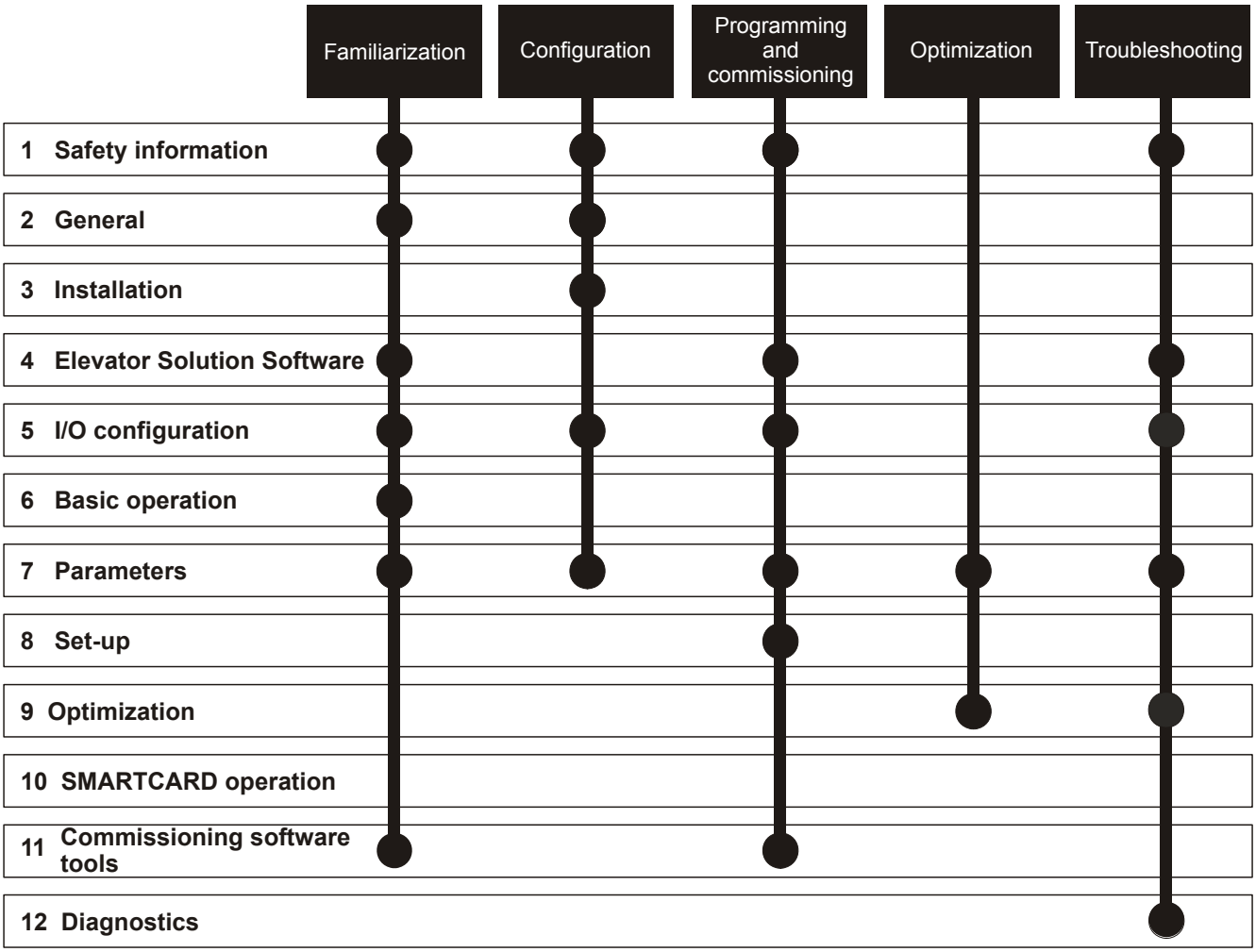

Contents

1 Safety information

1.1 Warnings, cautions and notes

WARNING

A Warning contains information which is essential for avoiding a safety hazard.

CAUTION

A Caution contains information which is necessary for avoiding a risk of damage to the product or other equipment.

NOTE

A Note contains information which helps to ensure correct operation of the product.

1.2 Electrical safety - general warning

The voltages used in the drive can cause severe electrical shock and/or burns, and could be lethal. Extreme care is necessary at all times when working with or adjacent to the drive.

Specific warnings are given at the relevant places in this User Guide.

1.3 System design and safety of personnel

The drive is intended as a component for professional incorporation into complete equipment or a system. If installed incorrectly, the drive may present a safety hazard.

The drive uses high voltages and currents, carries a high level of stored electrical energy, and is used to control equipment which can cause injury.

Close attention is required to the electrical installation and the system design to avoid hazards either in normal operation or in the event of equipment malfunction. System design, installation, commissioning/ start-up and maintenance must be carried out by personnel who have the necessary training and experience. They must read this safety information and this User Guide carefully.

The STOP and SAFE TORQUE OFF functions of the drive do not isolate dangerous voltages from the output of the drive or from any external option unit. The supply must be disconnected by an approved electrical isolation device before gaining access to the electrical connections.

With the sole exception of the SAFE TORQUE OFF function, none of the drive functions must be used to ensure safety of personnel, i.e. they must not be used for safety-related functions.

Careful consideration must be given to the functions of the drive which might result in a hazard, either through their intended behavior or through incorrect operation due to a fault. In any application where a malfunction of the drive or its control system could lead to or allow damage, loss or injury, a risk analysis must be carried out, and where necessary, further measures taken to reduce the risk - for example, an over-speed protection device in case of failure of the speed control, or a fail-safe mechanical brake in case of loss of motor braking.

The SAFE TORQUE OFF function has been approved by BGIA as meeting the requirements of the following standards, for the prevention of unexpected starting of the drive:

EN 61800-5-2:2007 SIL 3

EN ISO 13849-1:2006 PL e

EN 954-1:1997 Category 3

The SAFE TORQUE OFF function may be used in a safety-related application. The system designer is responsible for ensuring that the complete system is safe and designed correctly according to the relevant safety standards.

1.4 Environmental limits

Instructions in the *Unidrive SP User Guide* regarding transport, storage, installation and use of the drive must be complied with, including the specified environmental limits. Drives must not be subjected to excessive physical force.

1.5 Access

Drive access must be restricted to authorized personnel only. Safety regulations which apply at the place of use must be complied with.

1.6 Fire protection

The drive enclosure is not classified as a fire enclosure. A separate fire enclosure must be provided. For further information, refer to section section 3.2 *Fire protection on page 20* for more information.

1.7 Compliance with regulations

The installer is responsible for complying with all relevant regulations, such as national wiring regulations, accident prevention regulations and electromagnetic compatibility (EMC) regulations. Particular attention must be given to the cross-sectional areas of conductors, the selection of fuses or other protection, and protective earth (ground) connections.

Within the European Union, all machinery in which this product is used must comply with the following directives:

2006/42/EC Safety of machinery.
2004/108/EC: Electromagnetic Compatibility.
95/16/EC: Elevators Directive.

1.8 Motor

Ensure the motor is installed in accordance with the manufacturer's recommendations. Ensure the motor shaft is not exposed.

Standard squirrel cage induction motors are designed for single speed operation. If it is intended to use the capability of the drive to run a motor at speeds above its designed maximum, it is strongly recommended that the manufacturer is consulted first.

Low speeds may cause the motor to overheat because the cooling fan becomes less effective. The motor should be installed with a protection thermistor. If necessary, an electric forced vent fan should be used.

The values of the motor parameters set in the drive affect the protection of the motor. The default values in the drive should not be relied upon.

It is essential that the correct value is entered in Pr **0.46** motor rated current. This affects the thermal protection of the motor.

1.9 Mechanical brake control

The brake control functions are provided to allow well co-ordinated operation of an external brake with the drive. While both hardware and software are designed to high standards of quality and robustness, they are not intended for use as safety functions, i.e. where a fault or failure would result in a risk of injury. In any application where the incorrect operation of the brake release mechanism could result in injury, independent protection devices of proven integrity must also be incorporated.

1.10 Adjusting parameters

Some parameters have a profound effect on the operation of the drive. They must not be altered without careful consideration of the impact on the controlled system. Measures must be taken to prevent unwanted changes due to error or tampering.

1.11 Warnings

WARNING

Competence of the installer
The drive must be installed by professional assemblers who are familiar with the requirements for safety and EMC. The assembler is responsible for ensuring that the end product or system complies with all the relevant laws in the country where it is to be used.

WARNING

Follow the instructions
The **mechanical and electrical installation** instructions in the Unidrive SP User Guide must be adhered to. Any questions or doubt should be referred to the supplier of the equipment. It is the responsibility of the owner or user to ensure that the installation of the drive and any external option unit, and the way in which they are operated and maintained, comply with the requirements of the Health and Safety at Work Act in the United Kingdom or applicable legislation and regulations and codes of practice in the country in which the equipment is used.

WARNING

Fuses
The AC supply to the drive must be installed with suitable protection against overload and short-circuits. The *Unidrive SP User Guide* shows recommended fuse ratings. Failure to observe this requirement will cause risk of fire.

WARNING

The **ground loop impedance** must conform to the requirements of local safety regulations.

The drive must be grounded by a connection capable of carrying the prospective fault current until the protective device (fuse, etc.) disconnects the AC supply.

The ground connections must be inspected and tested at appropriate intervals.

WARNING

Only **type B ELCB / RCD** are suitable for use with 3 phase inverter drives.

WARNING

A **fuse** or other over-current protection should be installed to the relay circuit.

WARNING

Electric shock risk
The voltages present in the following locations can cause severe electric shock and may be lethal:

- AC supply cables and connections
- DC and brake cables, and connections
- Output cables and connections
- Many internal parts of the drive, and external option units

Unless otherwise indicated, control terminals are single insulated and must not be touched.

WARNING

Stored charge
The drive contains capacitors that remain charged to a potentially lethal voltage after the AC supply has been disconnected. If the drive has been energized, the AC supply must be isolated at least ten minutes before work may continue.

Normally, the capacitors are discharged by an internal resistor. Under certain, unusual fault conditions, it is possible that the capacitors may fail to discharge, or be prevented from being discharged by a voltage applied to the output terminals. If the drive has failed in a manner that causes the display to go blank immediately, it is possible the capacitors will not be discharged. In this case, consult Control Techniques or their authorized distributor.

WARNING

Isolation device
The AC supply must be disconnected from the drive using an approved isolation device before any cover is removed from the drive or before any servicing work is performed.

WARNING

Users must not attempt to repair a drive if it is faulty, nor carry out fault diagnosis other than through the use of the diagnostic features described in Chapter 12 *Diagnostics* . If a drive is faulty, it must be returned to an authorized Control Techniques distributor for repair.

WARNING

Do not change **parameter values** without careful consideration; incorrect values may cause damage or result in a safety hazard.

WARNING

If the drive has been used at high load levels for a period of time, the heatsink can reach **temperatures in excess of 70 °C (158 °F)**. Human contact with the heatsink should be prevented.

WARNING

STOP function SAFE TORQUE OFF function
The STOP function does not remove dangerous voltages from the drive, the motor or any external option units.

WARNING

Pr **0.46** *Motor rated current* must be set correctly to avoid a risk of fire in the event of motor overload.

WARNING

If the cable between the drive and the motor is to be **interrupted by a contactor or circuit breaker,** ensure that the drive is disabled before the contactor or circuit breaker is opened or closed. Severe arcing may occur if this circuit is interrupted with the motor running at high current and low speed, and result in possible drive failure if repeatedly carried out.

WARNING

Permanent magnet motors
Permanent magnet motors generate electrical power if they are rotated, even when the supply to the drive is disconnected. If that happens then the drive will become energized through its motor terminals.
If the motor load is capable of rotating the motor when the supply is disconnected, then the motor must be isolated from the drive before gaining access to any live parts.

WARNING

SAFE TORQUE OFF inhibits the operation of the drive, this includes inhibiting braking. If the drive is required to provide both braking and SAFE TORQUE OFF in the same operation (e.g. for emergency stop) then a safety timer relay or similar device must be used to ensure that the drive is disabled a suitable time after braking. The braking function in the drive is provided by an electronic circuit which is not fail-safe. If braking is a safety requirement, it must be supplemented by an independent fail-safe braking mechanism.

WARNING

A **rotating autotune** in closed loop mode will cause the motor to accelerate up to $^{2}/_{3}$ base speed in the direction selected regardless of the reference provided. Once complete the motor will coast to a stop. The run signal must be removed before the drive can be made to run at the required reference. The drive can be stopped at any time by removing the run signal or removing the drive enable.

WARNING

The short low speed and normal low speed autotune tests in servo mode will rotate the motor by up to 2 revolutions in the direction selected, regardless of the reference provided. The minimal movement test will move the motor through an angle defined by Pr **5.38**.
Once complete the motor will come to a standstill. The run signal must be removed before the drive can be made to run at the required reference.
The drive can be stopped at any time by removing the run signal or removing the Drive Enable.

WARNING

Encoder phase angle (servo mode only)
With drive software version V01.08.00 onwards, the encoder phase angles in Pr **3.25** and Pr **21.20** are copied to the SMARTCARD when using any of the SMARTCARD transfer methods.
With drive software version V01.05.00 to V01.07.01, the encoder phase angles in Pr **3.25** and Pr **21.20** are only copied to the SMARTCARD when using either Pr **0.30** set to Prog (2) or Pr **xx.00** set to 3yyy.
This is useful when the SMARTCARD is used to back-up the parameter set of a drive but caution should be used if the SMARTCARD is used to transfer parameter sets between drives.
Unless the encoder phase angle of the servo motor connected to the destination drive is known to be the same as the servo motor connected to the source drive, an autotune should be performed or the encoder phase angle should be entered manually into Pr **3.25** (or Pr **21.20**). If the encoder phase angle is incorrect the drive may lose control of the motor resulting in an O.SPd or Enc10 trip when the drive is enabled.
With drive software version V01.04.00 and earlier, or when using software version V01.05.00 to V01.07.01 and Pr **xx.00** set to 4yyy is used, then the encoder phase angles in Pr **3.25** and Pr **21.20** are not copied to the SMARTCARD. Therefore, Pr **3.25** and Pr **21.20** in the destination would not be changed during a transfer of this data block from the SMARTCARD.

WARNING

The control circuits are isolated from the power circuits in the drive by basic insulation (single insulation) only. The installer must ensure that the external control circuits are insulated from human contact by at least one layer of insulation (supplementary insulation) rated for use at the AC supply voltage.

WARNING

If the **control circuits** are to be connected to other circuits classified as Safety Extra Low Voltage (SELV) (e.g. to a personal computer), an additional isolating barrier must be included in order to maintain the SELV classification.

WARNING

To avoid the **risk of fire** when the drive is surface mounted with the braking resistor installed, the back plate should be a non-flammable material.

WARNING

Overload protection
When an external braking resistor is used, it is essential that an overload protection device is incorporated in the braking resistor circuit to prevent the risk of fire; this is described in the *Unidrive SP User Guide.*

1.12 Caution

CAUTION

This is a product of the restricted distribution class according to **IEC 61800-3**

In a residential environment this product may cause radio interference in which case the user may be required to take adequate measures.

CAUTION

The **second environment** typically includes an industrial low-voltage power supply network which does not supply buildings used for residential purposes. Operating the drive in this environment without an external EMC filter may cause interference to nearby electronic equipment whose sensitivity has not been appreciated. The user must take remedial measures if this situation arises. If the consequences of unexpected disturbances are severe, it is recommended that the guidelines in the *Unidrive SP User Guide* are adhered to.

CAUTION

Power down the drive before **installing / removing Solutions Modules**. Failure to do so may result in damage to the product.

2 General

NOTE

The terms 'lift' and 'elevator' are interchangeable within this user guide and associated documentation.

Unidrive SP is a high performance drive which can operate in open loop, closed loop vector and servo modes making it an excellent choice for elevator applications. It is compatible with a wide range of feedback devices including encoders, and resolvers. The drive also supports a wide range of communications including RS485 (DCP3 and DCP4) and CANopen. In addition the standard I/O on the drive can be expanded using one of the range of I/O Solutions Modules. The Unidrive SP has three Solutions Modules slots available to further expand the standard drives capabilities.

Figure 2-1 shows the Unidrive SP incorporated into an elevator system using the Solutions Module and Elevator Solution Software. In addition a resolver feedback Solutions Module and extended I/O Solutions Modules are also shown.

Figure 2-1 Elevator system

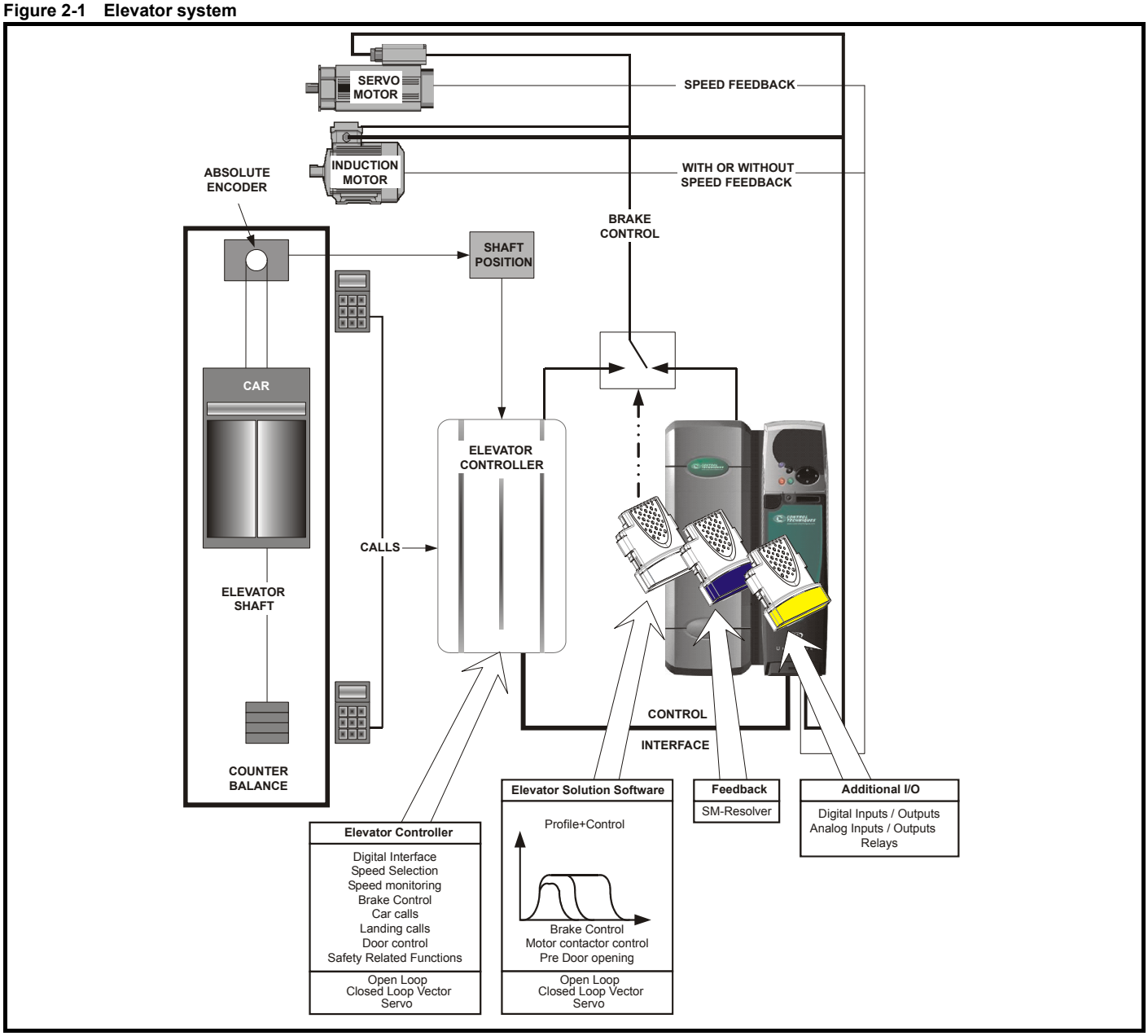

2.1 Elevator system - Unidrive SP and elevator controller

The Elevator Solution Software is introduced onto the Unidrive SP using either an SM-Applications or Applications Lite. The SM-Applications Lite is used for the standard Elevator Solution Software. The SM-Applications would be used where additional features are required in addition to the standard Elevator Solution Software, e.g. extended user memory, RS485 interface or DCP control.

The Unidrive SP Elevator Solution Software incorporates a travel profile calculator with a special operating level designed specifically for elevators. This has features allowing it to be used for both geared and gearless elevators with induction or permanent magnet motors. The default operating mode for the Unidrive SP Elevator Solution Software is open loop vector, however this can be re-configured for either closed loop vector or closed loop servo.

The Elevator Solution Software generates a velocity motion profile, which includes elevator application specific functions. The Unidrive SP is controlled via a digital interface from the elevator controller. The Elevator Solution Software receives control signals from the elevator controller, and derives both speed and direction signals along with brake control, motor contactor control and door opening signals. The elevator controller could control features such as the brake control, motor contactor control and door opening in place of the Unidrive SP if required.

NOTE

The Unidrive SP drive also has sensorless closed loop vector mode (RFC), which allows closed loop operation with no position feedback. RFC mode also allows a closed loop system to continue to operate under a fault condition i.e. loss of encoder feedback.

NOTE

The elevator controller provides all the safety related functions in the elevator system.

2.2 Elevator Solution Software

The Elevator Solution Software is programmed into either the SM-Applications or SM-Applications Lite and runs within the second processor. The software can be configured to operate in either creep-to-floor or direct-to-floor positioning modes. The default positioning mode and most commonly used is creep-to-floor Pr **20.13** = 0.

The elevator controller evaluates the elevator landing calls and shaft signals then generates the required control signals to the Unidrive SP and Elevator Solution Software. The Elevator Solution Software receives the travel commands and continually modifies the profile for the required travel and ride comfort.

The Elevator Solution Software generates the velocity motion profile including a number of additional features as listed in the following section:

Function	Description
Operating Mode	
Creep-to-floor	Default configuration creep-to-floor positioning.
Direct-to-floor	Optional configuration for high speed elevators using direct-to-floor positioning, reducing elevator journey times.
User Interface	
Text display (LCD Keypad)	Text strings allow commissioning / start up and drive set-up without the need for a User Guide. Also provides additional help text.
Dedicated F Menu	Single menu can be used for set-up, commissioning / start up and optimization.
Conventional units (mm/s, mm/s^2)	No conversion calculations required.
Digital signals	Digital I/O interface between elevator controller and Unidrive SP for direction and speed selection.
Analog signals	Analog input interface for control and external load cell connection, programmable outputs. No analog speed reference input is available with Elevator Solution Software.
Speed Selection	
15 Binary speed selections	Flexible interface allowing for a range of speeds to be defined and selected.
6 Priority speed selections	
2 Speed thresholds	User defined, can be used for advanced door opening, over speed monitoring and motor contactor control.
Control	
Motor contactor control	Motor contactor control generated based on profile.
Brake control	Programmable brake control is available based on profile and load compensation.
Advanced door opening	Advanced door opening is available which can reduce elevator journey times.
TUV approved SAFE TORQUE OFF	TUV approval allows operation with dual single or zero motor contactors.
Motor contactor monitor	Monitor for correct operation of the motor contactor using auxiliary contacts on the motor contactor connected to the drive's central I/O.
Brake control monitoring	Monitor brake auxiliary contacts for correct operation connected to drive's control I/O.
Stationary autotune for PM synchronous motors	A stationary autotune is available for PM synchronous motors which avoids lifting ropes to carry out a phasing test.
ENP electronic nameplate	An electronic nameplate feature is available which allows the system parameters to be saved to an SC.Endat encoder and uploaded to the drive during commissioning.

In addition to the standard features of the Elevator Solution Software, there are additional features which can be enabled thereby increasing the functionality of the Elevator Solution Software still further.

Function	Description
Advanced features	
Start locking position controller	Used for both geared and gearless systems to prevent movement of the motor during brake release at start.
Start optimizer	Used to overcome stiction from the elevator systems mechanical arrangement ensuring smooth starting.
Peak curve operation	Ensures constant stopping distance independent of when the stop signal is received
Floor sensor correction	Improved accurate distance correction available with floor sensor located around 50 to 500 mm from floor level.
Short floor distance landing	Short floor landing should be used where floor distance is less than 0.7 m.
Fast stop	Fast stop normally used for inspection and maintenance in manual operating mode.
Fast start	Allows a fast start by magnetizing the motor and controlling the brake during closing of the car doors.
Inertia compensation	Used to overcome system inertia.
Load compensation	A external load cell can be connected to Unidrive SP and Elevator Solution Software to be used for load compensation.
Load measurement	The load measurement feature measures the level of load and direction during every start, with this being used for rescue operation in the direction of least load.
Blocked car release	A function is available to detect a blocked car then to carry out release sequence on next start.
Emergency back-up operation	Back-up operation is available using a back-up power supply along with the load measurement feature available in the Elevator Solution Software.
Lifetime control	Monitoring the drive operation, the control software carries out adjustments to increase drive lifetime.
Unintended car movement	To allow testing of the unintended movement of the cars protection and monitoring.

Once the required Elevator Solution Software features have been enabled the performance can be optimized with the following features:

Function	Description
Optimization	
Separately adjustable jerks, acceleration and deceleration rates	All sections of the profile can be optimized individually.
Fixed and variable speed and current loop gains for Start, Travel and Positioning	Fixed or variable speed and current loop gains can be enabled. The variable gains being selected for systems with high levels of stiction, fast start and landing.
Multiple current loop filters for Start Travel and Positioning	With high Start and Stop gains acoustic noise could be generated from the motor dependant upon the feedback resolution. Multiple current loop filters can be introduced for each section of the elevator profile to minimise acoustic noise generated in these areas.

Diagnostics are also available within the Unidrive SP and Elevator Solution Software:

Function	Description
Diagnostics	
Speed error detection	Programmable speed error detection with trip.
Distance error detection	Programmable distance error detection with trip.
Thermal protection	Prevents operation below 0° C, provides warning with high motor temperatures.
Motor fluxed protection	Motor fluxed detection, trip on under fluxed, incorrect motor contactor control.
Motor phase loss detection	Motor phase loss, trip on detection.
SAFE TORQUE OFF monitoring	Monitors the SAFE TORQUE OFF input, trip if inoperative.
Fast disable monitoring	Monitors the fast disable input
Encoder connection reversed	Checks encoder direction with motor rotation.
Motor contactor monitoring	Monitors correct operation of output motor contactors
Brake contact monitoring	Monitors correct operation of the brake

2.3 ENP electronic nameplate

The ENP electronic nameplate allows the user to program a Unidrive SP with data from a pre programmed SC.Endat encoder allowing immediate operation following selection of the control interface and entering the code. The SC.Endat pre programmed data includes the motor data, mechanical / system data and control loop gains.

NOTE

The ENP electronic nameplate function is only available if an SC.Endat encoder type is used and the encoder has been pre programmed at the supplier of the motor with the ENP electronic nameplate data.

2.3.1 Programming the drive with the ENP electronic nameplate

Programming the drive using the ENP electronic nameplate function can be carried out with the "drive out of the box" in the default open loop operating mode. The programming sequence of the ENP electronic nameplate will:

1. Change the operating mode of the drive to servo mode.
2. Change the encoder type to SC.Endat.
3. Program the drive parameters.

To program the drive, the following settings are required:

F00 = 24006 Wait for 10 to 15 s, until **F00** = 0 (reading the electronic nameplate)
Automatic setting of the operation mode: Servo
Automatic setting of the encoder type: SC.endat
Reading ENP electronic nameplate data

F02 = -1, 0, 1, or 2 Setting the Interface type (If not included in the ENP parameters)

Programming the drive using the ENP electronic nameplate will only be executed if the drive is not enabled (Pr **10.02** = 0) drive display state for example "INH". The ENP electronic nameplate read takes approximately 10 s to 15 s. If the ENP electronic nameplate read is not successful, a trip will be generated and displayed on the drive, refer to section 12 *Diagnostics* on page 197 for further details. For some faults, an additional trip code can be generated which is displayed in Pr **71.58** and accessed via the SM-Keypad Plus or by using CT Soft.

NOTE

If the operation mode is not initially set up as servo mode before activating the ENP electronic nameplate, a trip "th" and/or "EnC2" may be displayed. The "th" and/or "EnC2" may therefore be present during the ENP electronic nameplate read. If the operation mode has to be changed the trip log will be cleared and show one trip "EnC2".

2.3.2 Example electronic nameplate parameters

Using the ENP electronic nameplate the following parameters could be initially programmed to the SC.Endat encoder and then read from the SC.Endat encoder to the Unidrive SP.

Table 2-1 Electronic nameplate parameters

Servo mode	Parameter description	Unit
11.31	Operation Mode (CL VECt or Servo)	3 = SV
1.06	Maximum motor	rpm
5.07	Nominal motor current	A
5.09	Nominal motor voltage	V
5.11	Motor pole count	p
0.45	Thermal filter	
0.43	Phase angle	°
5.18	Switching frequency	0 - 5 = 3 - 16 kHz
19.29	Sheave diameter in mm	mm
19.27	Gear numerator **-**	
19.30	Gear denominator **-**	
18.30	Operational speed in mm/s	mm/s
4.07	Current limit	%
2.11	Acceleration	mm/s^2
2.21	Deceleration	mm/s^3
19.25	Brake release time	ms
18.24	Brake apply time	ms
18.27	P- gain speed loop 1 start	
18.28	I - gain speed loop 1 start	
18.25	P - gain speed loop 2 run	
18.26	I - gain speed loop 2 run	
4.13	Current Loop P-gain	
4.14	Current Loop I-gain	

2.3.3 ENP electronic nameplate diagnostics

If a fault occurs during the ENP electronic nameplate read the following trip codes could be generated.

Trip	Diagnosis		
t050 Wrong ENP data	Incorrect ENP electronic nameplate data. The data in the ENP is not of the same drive operating mode or there is no ENP data present.		
t052 Incorrect encoder type	Generated where the encoder used is of the incorrect type **F03** (Pr **3.38**).		
t054 Fault present during ENP read	Pr **71.58** =	**1**	No fault identified.
		-3	CRC error, encoder defective.
		-4	Parameter value out of range. The data value read from the encoder cannot be written to the drive parameter. Inverter size too small.
		-5	Command is not supported by the encoder.
		-6	The encoder has signalled an error.
		-7	Message received from the encoder has a CRC/checksum error.
		-8	Timeout, encoder does not reply.
		-9	Invalid slot or no SM-Universal Encoder Plus installed. Slot must be 0 to 3 (inclusive).
		-10	No encoder connected.

NOTE

For more detailed information on the ENP software function, programming the SC.EnDAt encoder with a data file and managing this feature refer to the supplier of the drive.

2.4 Set-up, commissioning / start up tools

The following options are available to assist with the set-up, commissioning / start up of the Unidrive SP and Elevator Solution Software:

CTSoft This is a PC tool that interfaces to the Unidrive SP and allows all drive and Solutions Module parameters to be viewed. This allows parameters to be adjusted, uploaded and downloaded to the Unidrive SP and Elevator Solution Software while on-line, Parameter sets can also be saved.

CTScope This is a PC based oscilloscope that allows all parameters to be viewed in the drive and Solutions Modules. From the speed profiles, motor currents and control signals can be monitored during operation. Waveforms can be saved.

SMARTCARD The Unidrive SP uses a SMARTCARD that can copy and hold complete parameter sets from the drive and Elevator Solution Software. This option can be used for simple cloning from one elevator drive to another.

LiftSP This is a PC tool which has both an oscilloscope and profile / parameter set-up tool. Parameters can be monitored, modified and saved to file.

2.5 Identification

The SM-Applications or SM-Applications Lite for the elevator application must be programmed with the required Elevator Solution Software. The Elevator Solution Software version and identity number can be verified in the following parameters:

Elevator Solution Software version **F53**, Pr **20.01** software version in the form of xxx.
Elevator Solution Software identity **F54**, Pr **20.02** Software identity number in the form of xxxxx.

To verify the Elevator Solution Software is running, monitor **F54**, Pr **20.02**. This should toggle every 1s between +10614 and -10614.

2.6 Unidrive SP options

Unidrive SP has a number of options that can be installed to further expand the flexibility of the drive. Various Solutions Modules are available and include Feedback, Fieldbus and Automation.

Figure 2-2 Unidrive SP options

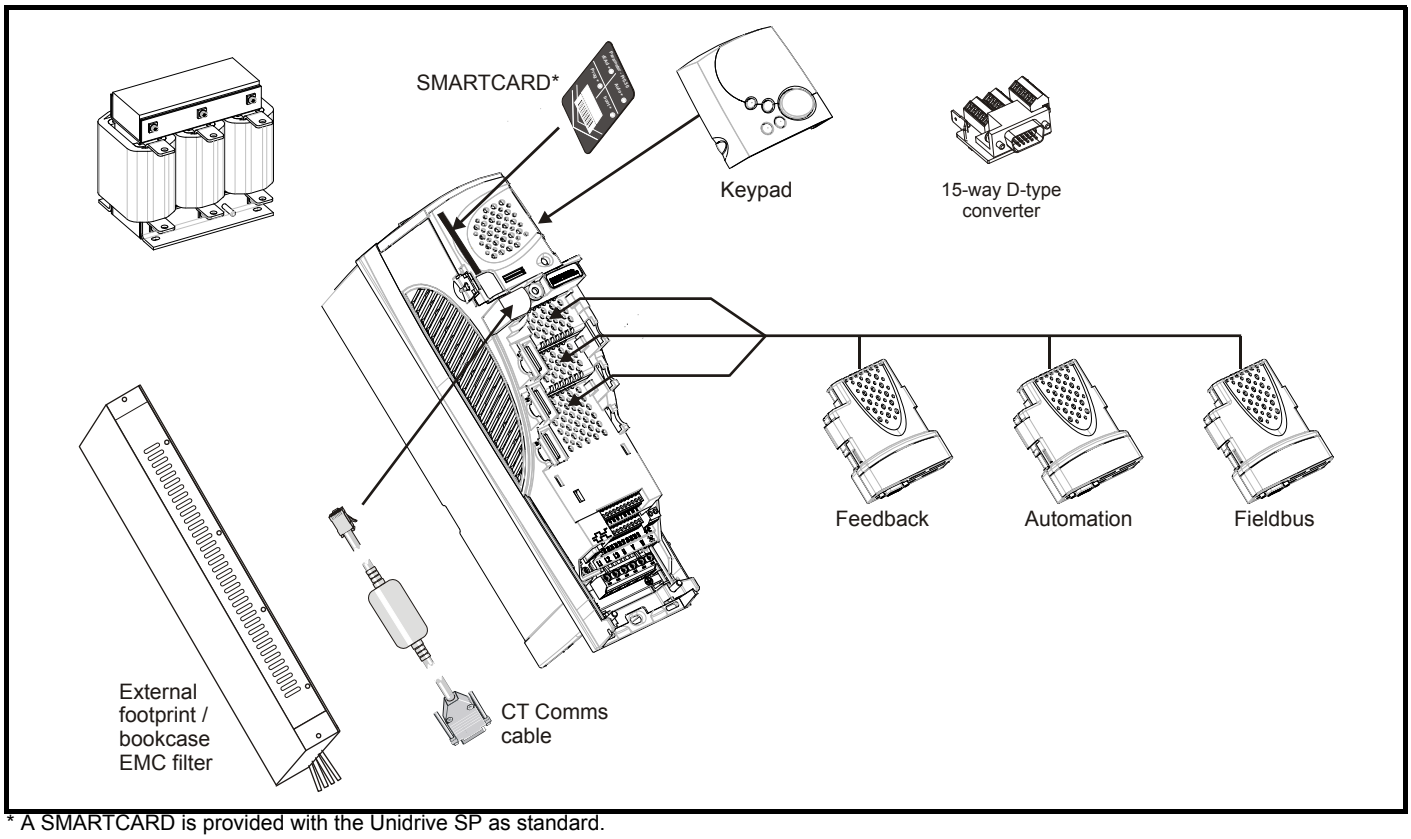

* A SMARTCARD is provided with the Unidrive SP as standard.

All Unidrive SP Solutions Modules are color-coded in order to make identification easy. The following table shows the color-code key and gives further details on their function.

Table 2-2 Solutions Module identification

Type	Solutions Module	Color	Name	Further Details
Feedback		Light Green	SM-Universal Encoder Plus	**Universal Feedback interface** Feedback interface for the following devices: **Inputs** • Incremental encoders • SinCos encoders • SSI encoders • EnDat encoders **Outputs** • Quadrature • Frequency and direction • SSI simulated outputs
		Light Blue	SM-Resolver	**Resolver interface** Feedback interface for resolvers. Simulated quadrature encoder outputs
		Brown	SM-Encoder Plus	**Incremental encoder interface** Feedback interface for incremental encoders without commutation signals. No simulated encoder outputs available
		Dark Brown	SM-Encoder Output Plus	**Incremental encoder interface** Feedback interface for incremental encoders without commutation signals. Simulated encoder output for quadrature, frequency and direction signals
Feedback		N/A	15-way D-type converter	**Drive encoder input converter** Provides screw terminal interface for encoder wiring and spade terminal for shield
		N/A	Single ended encoder interface (15V or 24V)	**Single ended encoder interface** Provides an interface for single ended ABZ encoder signals, such as those from hall effect sensors. 15V and 24V versions are available.
	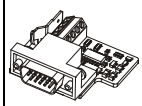	N/A	Reference Marker Signal Interface	**Reference Marker Signal Interface** Provides an interface that converts the 1Vpp reference marker signal found on some SinCos into a differential EIA485 compatible marker pulse signal for use by the drive. The sine and cosine signals from the encoder are passed to the drive unchanged.
	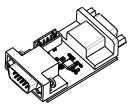	N/A	ERN1387 Encoder Interface Board	**ERN1387 Encoder Interface Board** Provides an interface for Heidenhain ERN1387 and ERN487 SinCos encoder which use a single SinCos cycle per revolution commutation track. A SM-Universal Encoder Plus module is required to use this interface board.

Table 2-2 Solutions Module identification

Type	Solutions Module	Color	Name	Further Details
Automation (I/O Expansion)		Yellow	SM-I/O Plus	**Extended I/O interface** Increases the I/O capability by adding the following to the existing I/O in the drive: • Digital inputs x 3 • Digital I/O x 3 • Analog inputs (voltage) x 2 • Analog output (voltage) x 1 • Relay x 2
		Yellow	SM-I/O 32	**Extended I/O interface** Increase the I/O capability by adding the following to the existing I/O in the drive: • High speed digital I/O x 32 • +24V output
		Dark Yellow	SM-I/O Lite	**Additional I/O** 1 x Analog input (± 10V bi-polar or current modes) 1 x Analog output (0-10V or current modes) 3 x Digital input and 1 x Relay
		Dark Red	SM-I/O Timer	**Additional I/O with real time clock** As per SM-I/O Lite but with the addition of a Real Time Clock for scheduling drive running
		Turquoise	SM-I/O PELV	**Isolated I/O to NAMUR NE37 specifications** For chemical industry applications 1 x Analog input (current modes) 2 x Analog outputs (current modes) 4 x Digital input / outputs, 1 x Digital input, 2 x Relay outputs
		Olive	SM-I/O 120V	**Additional I/O conforming to IEC 61131-2 120Vac** 6 digital inputs and 2 relay outputs rated for 120Vac operation
		Cobalt Blue	SM-I/O 24V Protected	**Additional I/O with overvoltage protection up to 48V** 2 x Analog outputs (current modes) 4 x Digital input / outputs, 3 x Digital inputs, 2 x Relay outputs
Automation (Applications)		Dark Green	SM-Applications	**Applications processor (with CTNet)** 2nd processor for running pre-defined and /or customer created application software with CTNet support
		White	SM-Applications Lite	**Applications processor** 2nd processor for running pre-defined and /or customer created application software
		Moss Green	SM-Applications Plus	**Applications processor (with CTNet)** 2nd processor for running pre-defined and /or customer created application software with CTNet support. Enhanced performance over SM-Applications
		White	SM-Applications Lite V2	**Applications processor** 2nd processor for running pre-defined and /or customer created application software. Enhanced performance over SM-Applications Lite

Table 2-2 Solutions Module identification

Type	Solutions Module	Color	Name	Further Details
Fieldbus		Purple	SM-PROFIBUS-DP-V1	**Profibus option** PROFIBUS DP adapter for communications with the drive
		Medium Grey	SM-DeviceNet	**DeviceNet option** Devicenet adapter for communications with the drive
		Dark Grey	SM-INTERBUS	**Interbus option** Interbus adapter for communications with the drive
		Pink	SM-CAN	**CAN option** CAN adapter for communications with the drive
		Light Grey	SM-CANopen	**CANopen option** CANopen adapter for communications with the drive
		Beige	SM-Ethernet	**Ethernet option** 10 base-T / 100 base-T; Supports web pages, SMTP mail and multiple protocols: DHCP IP addressing; Standard RJ45 connection
		Brown Red	SM-EtherCAT	**EtherCAT option** EtherCAT adapter for communications with the drive

In addition to the Solutions Modules there are also two types of drive display, either LCD or LED, either of which can be selected for use with the Unidrive SP. It is recommended that the SM-Keypad Plus be used for the elevator drive where possible, as this provides both text strings and help data that simplifies set up and operation of the Unidrive SP with the Elevator Solution Software.

Table 2-3 Keypad identification

Type	Keypad	Name	Further Details
Keypad	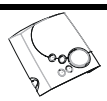	SM-Keypad	**LED keypad option** Keypad with a LED display for size 1 and above
	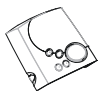	SM-Keypad Plus	**LCD keypad option** Keypad with an alpha-numeric LCD display with Help function for size 1 and above (preferred option with additional keypad custom elevator text)
		SP0-Keypad	**LED keypad option** Keypad with a LED display for size 0 only

3 Installation

3.1 Solutions Module / keypad installation / removal

CAUTION

Power down the drive before installing / removing the Solutions Module. Failure to do so may result in damage to the product.

Figure 3-1 Installation of a Solutions Module on size 0

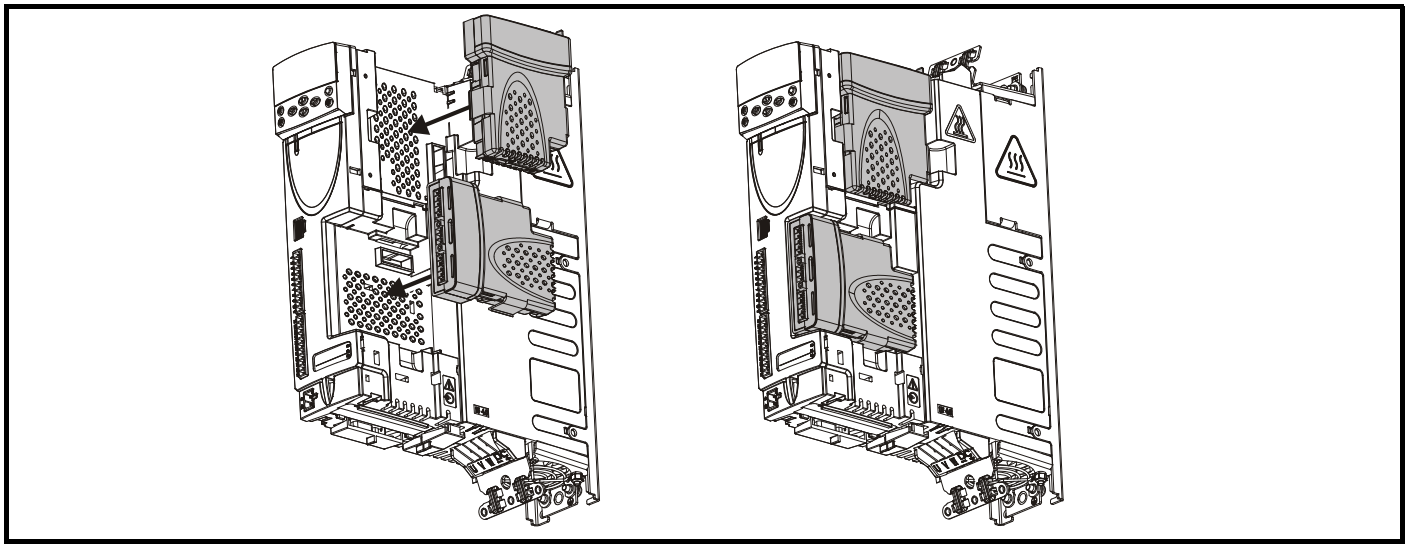

NOTE

On size 0, the protective tab on the Solutions Module slot must be removed before attempting to fit a Solutions Module.

Figure 3-2 Installation and removal of a Solutions Module on size 1 to 6

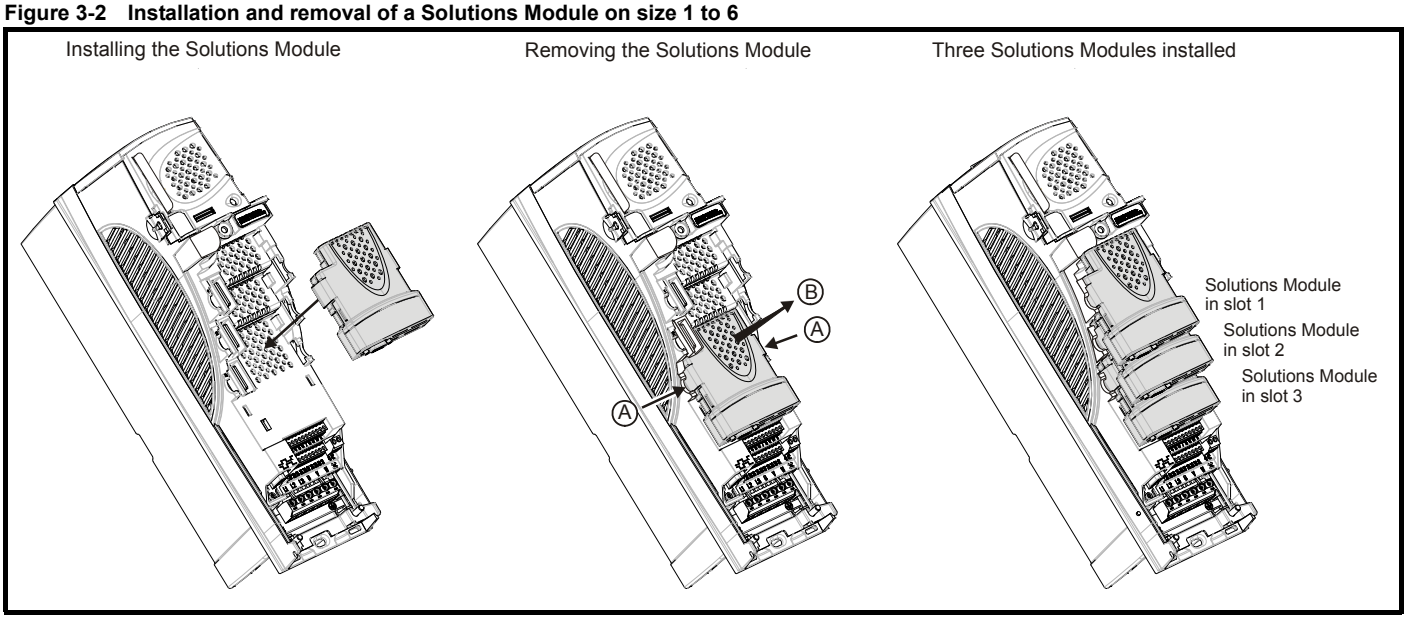

To install the Solutions Module, press down in the direction shown above until it clicks into place. To remove the Solutions Module, press inwards at the points shown (A) and pull in the direction shown (B). The drive has the facility for all three Solutions Module slots to be used at the same time, as illustrated.

NOTE

It is recommended that the Solutions Module slots are used in the following order: slot 3, slot 2 and slot 1.

WARNING Be aware of possible live terminals when installing the keypad.

Figure 3-3 Installation of a keypad on size 0

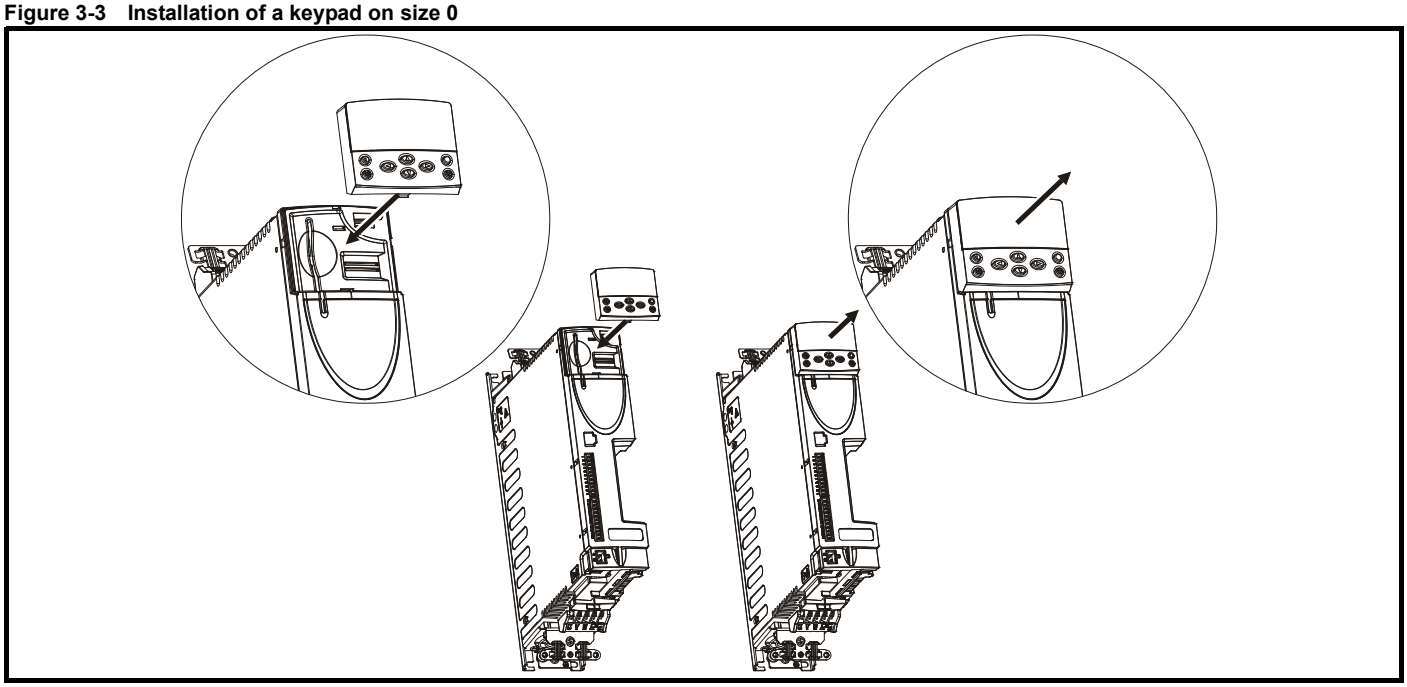

Figure 3-4 Installation and removal of a keypad on size 1 to 6

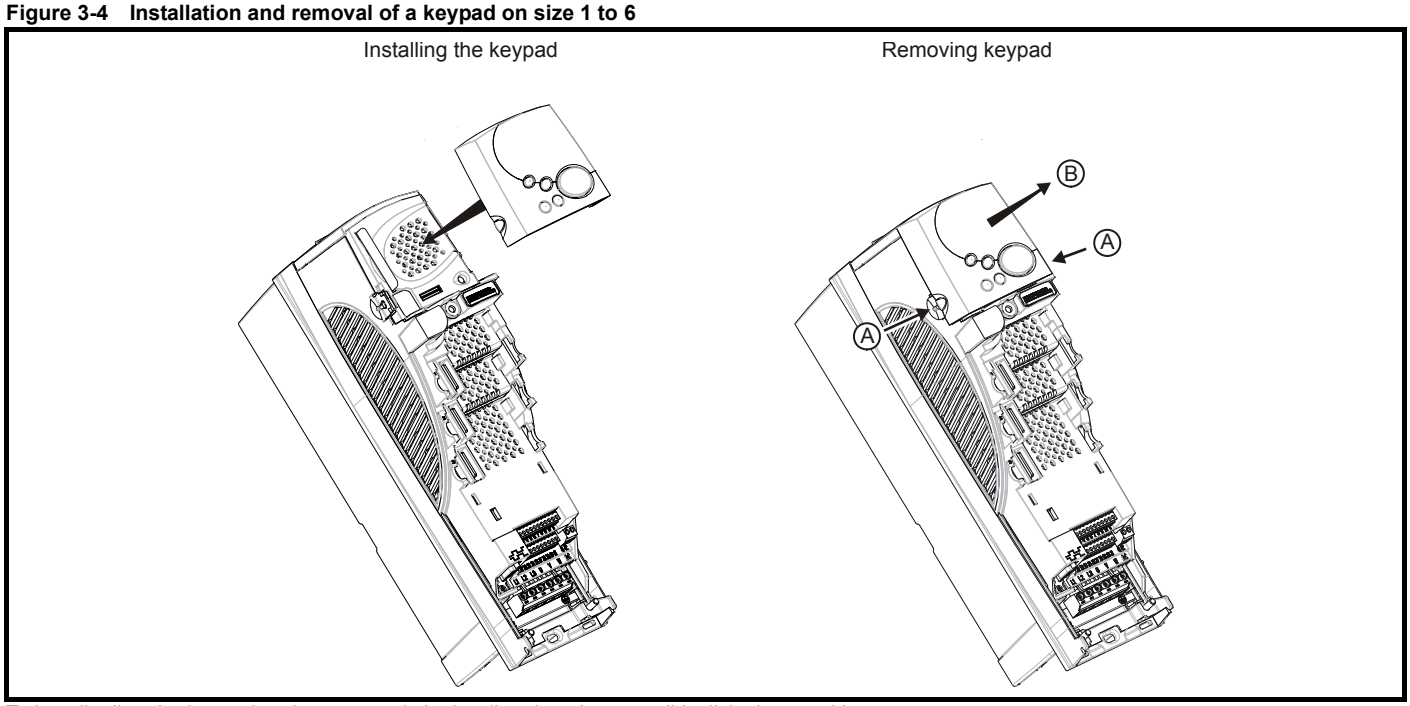

To install, align the keypad and press gently in the direction shown until it clicks into position.

To remove, while pressing the tabs inwards (A), gently lift the keypad in the direction indicated (B).

NOTE

The keypad can be installed / removed while the drive is powered up and running a motor, providing that the drive is not operating in keypad mode.

3.2 Fire protection

The drive enclosure is not classified as a fire enclosure. A separate fire enclosure must be provided.

For installation in the USA, a NEMA 12 enclosure is suitable.

For installation outside the USA, the following (based on IEC 62109-1, standard for PV inverters) is recommended.

The enclosure can be metal and/or polymeric, polymer must meet requirements which can be summarized for larger enclosures as using materials meeting at least UL 94 class 5VB at the point of minimum thickness.

Air filter assemblies to be at least class V-2.

The location and size of the bottom shall cover the area shown in Figure 3-5. Any part of the side which is within the area traced out by the 5° angle is also considered to be part of the bottom of the fire enclosure.

Figure 3-5 Fire enclosure bottom layout

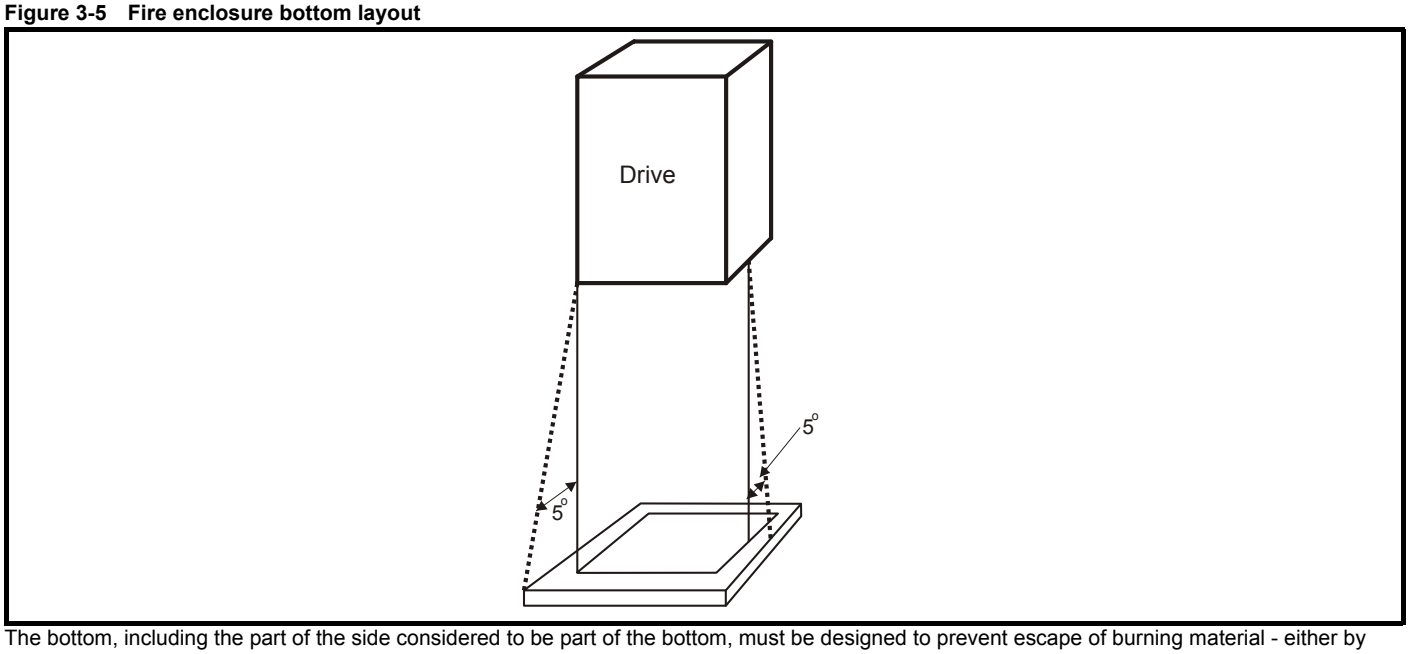

The bottom, including the part of the side considered to be part of the bottom, must be designed to prevent escape of burning material - either by having no openings or by having a baffle construction. This means that openings for cables etc. must be sealed with materials meeting the 5VB requirement, or else have a baffle above.

See Figure 3-6 for acceptable baffle construction. This does not apply for mounting in an enclosed electrical operating area (restricted access) with concrete floor.

Figure 3-6 Fire enclosure baffle construction

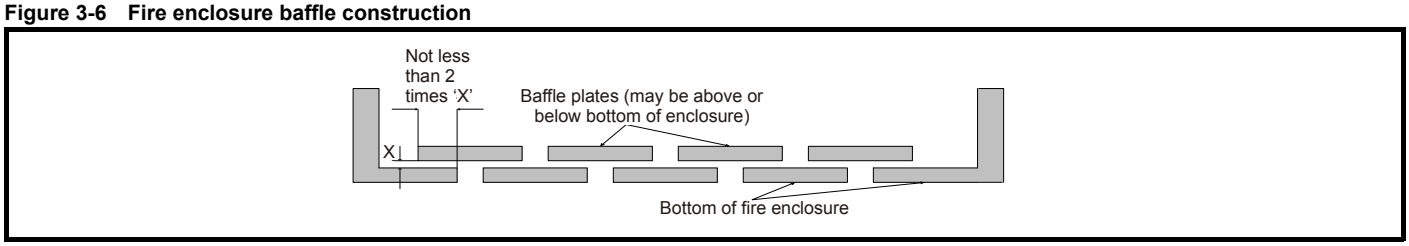

3.3 Control connections

The following diagram shows the control terminals for the Unidrive SP in its default configuration as a general purpose drive, and also when reconfigured as an elevator drive using the Solutions Module and Elevator Solution Software.

Figure 3-7 Control terminals

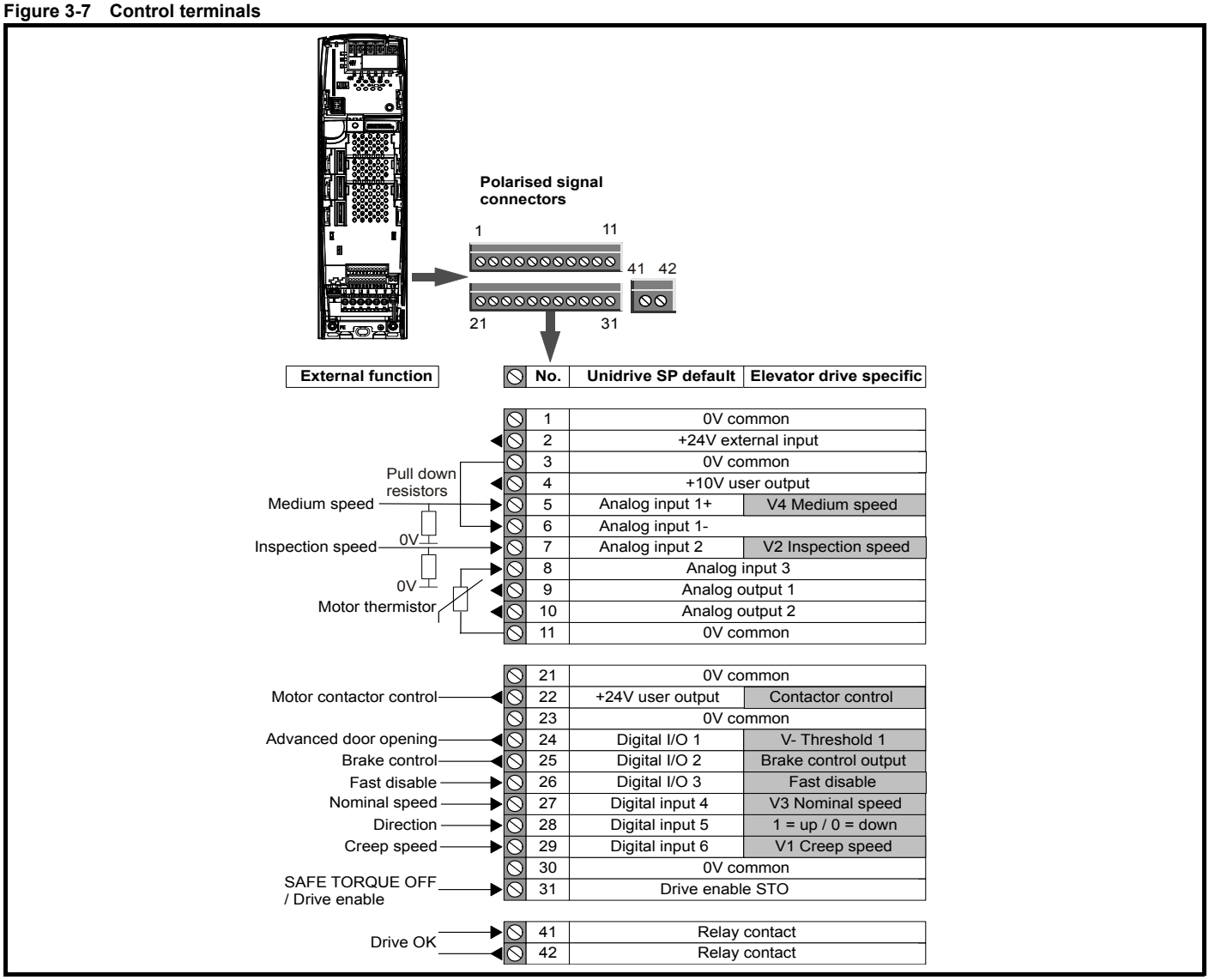

NOTE

The Unidrive SP drive operates in positive logic from default, negative logic control can be configured through Pr **8.29**. The drive enable SAFE TORQUE OFF input at control terminal T31 cannot be reconfigured for negative logic and must always operate in positive logic.

NOTE

When using the three analog inputs on the drive control terminals T5, T7 and T8 for speed selection, they should be installed with 4.7 kΩ pull down resistors.

3.3.1 Control terminal specification

1	0V common
Function	**Common connection for all external devices**

2	+24V external input
Function	**To supply the control circuit without providing a supply to the power stage**
Nominal voltage	+24.0 Vdc
Minimum continuous operating voltage	+19.2 Vdc
Maximum continuous operating voltage	+30.0 Vdc
Minimum start-up voltage	21.6 Vdc
Recommended power supply	60 W 24 Vdc nominal
Recommended fuse	3 A, 50 Vdc

3	0V common
Function	**Common connection for all external devices**

4	+10V user output
Function	**Supply for external analog devices**
Voltage tolerance	±1 %
Nominal output current	10 mA
Protection	Current limit and trip @ 30 mA

	Precision reference analog input 1
5	Non-inverting input
6	Inverting input
Type of input	Bipolar differential analog (For single-ended use, connect terminal 6 to terminal 3)
Full scale voltage range	±9.8 V ±1 %
Absolute maximum voltage range	±36 V relative to 0V
Working common mode voltage range	±13 V relative to 0V
Input resistance	100 kΩ ±1 %
Resolution	16-bit plus sign (as speed reference)
Monotonic	Yes (including 0V)
Dead band	None (including 0V)
Jumps	None (including 0V)
Maximum offset	700 µV
Maximum non linearity	0.3 % of input
Maximum gain asymmetry	0.5 %
Input filter bandwidth single pole	~1 kHz
Sampling period	250 µs with destinations as Pr **1.36**, Pr **1.37** or Pr **3.22** in closed loop vector or servo mode. 4 ms for open loop mode and all other destinations in closed loop vector or servo mode.

7	Analog input 2
Type of input	Bipolar single-ended analog voltage or unipolar current
Mode controlled by...	Pr **7.11**
Operating in Voltage mode	
Full scale voltage range	±9.8 V ±3 %
Maximum offset	±30 mV
Absolute maximum voltage range	±36 V relative to 0 V
Input resistance	>100 kΩ
Operating in current mode	
Current ranges	0 to 20 mA ±5 %, 20 to 0 mA ±5 %, 4 to 20mA ±5 %, 20 to 4 mA ±5 %
Maximum offset	250 µA
Absolute maximum voltage (reverse bias)	–36 V max
Absolute maximum current	+70 mA
Equivalent input resistance	≤200 Ω at 20 mA
Common to all modes	
Resolution	10 bit + sign
Sample period	250 µs when configured as voltage input with destinations as Pr **1.36**, Pr **1.37**, Pr **3.22** or Pr **4.08** in closed loop vector or servo mode. 4ms for open loop mode, all other destinations in closed loop vector or servo mode, or any destination when configured as a current input.

8	Analog input 3
Type of input	Bipolar single-ended analog voltage, unipolar current or motor thermistor input
Mode controlled by...	Pr **7.15**
Operating in Voltage mode (default)	
Voltage range	±9.8 V ±3 %
Maximum offset	±30 mV
Absolute maximum voltage range	±36 V relative to 0 V
Input resistance	>100 kΩ
Operating in current mode	
Current ranges	0 to 20 mA ±5 %, 20 to 0 mA ±5 %, 4 to 20 mA ±5 %, 20 to 4 mA ±5 %
Maximum offset	250 µA
Absolute maximum voltage (reverse bias)	–36 V max
Absolute maximum current	+70 mA
Equivalent input resistance	≤200 Ω at 20 mA
Operating in thermistor input mode	
Internal pull-up voltage	<5 V
Trip threshold resistance	3.3 kΩ ±10 %
Reset resistance	1.8 kΩ ±10 %
Short-circuit detection resistance	50 Ω ±40 %
Common to all modes	
Resolution	10 bit + sign
Sample period	250 µs when configured as voltage input with destinations as Pr **1.36**, Pr **1.37**, Pr **3.22** or Pr **4.08** in closed loop vector or servo mode. 4 ms for open loop mode, all other destinations in closed loop vector or servo mode, or any destination when configured as a current input.

T8 analog input 3 has a parallel connection to terminal 15 of the drive encoder connector.

9	Analog output 1
10	Analog output 2
Type of output	Bipolar single-ended analog voltage or unipolar single ended current
Mode controlled by...	Pr **7.21** and Pr **7.24**
Operating in Voltage mode (default)	
Voltage range	±10 V ±3 %
Maximum offset	±200 mV
Maximum output current	±35 mA
Load resistance	1 kΩ min
Protection	35mA max. Short circuit protection
Operating in current mode	
Current ranges	0 to 20 mA ±5 % 4 to 20 mA ±5 %
Maximum offset	600 µA
Maximum open circuit voltage	+15 V
Maximum load resistance	600 Ω
Common to all modes	
Resolution	10-bit (plus sign in voltage mode)
Update period	250 µs when configured as a high speed output with sources as Pr **4.02**, Pr **4.17** in all modes or Pr **3.02**, Pr **5.03** in closed loop vector or servo mode. 4 ms when configured as any other type of output or with all other sources.

11	0V common
Function	**Common connection for all external devices**

21	0V common
Function	**Common connection for all external devices**

22	+24V user output (selectable)
Terminal 22 default function	**+24V user output**
Programmability	Can be switched on or off to act as a fourth digital output (positive logic only) by setting the source Pr **8.28** and source invert Pr **8.18**
Nominal output current	200 mA (including all digital I/O)
Maximum output current	240 mA (including all digital I/O)
Protection	Current limit and trip

23	0V common
Function	**Common connection for all external devices**

24	Digital I/O 1
25	Digital I/O 2
26	Digital I/O 3
Type	Positive or negative logic digital inputs, positive or negative logic push-pull outputs or open collector outputs
Input / output mode controlled by...	Pr **8.31**, Pr **8.32** and Pr **8.33**
Operating as an input	
Logic mode controlled by...	Pr **8.29**
Absolute maximum applied voltage range	±30 V
Impedance	6 kΩ
Input thresholds	10.0 V ±0.8 V
Operating as an output	
Open collector outputs selected	Pr **8.30**
Nominal maximum output current	200 mA (total including terminal 22)
Maximum output current	240 mA (total including terminal 22)
Common to all modes	
Voltage range	0 V to +24 V
Sample / Update period	250 µs when configured as an input with destinations as Pr **6.35** or Pr **6.36**. 600 µs when configured as an input with destination as Pr **6.29**. 4 ms in all other cases.

27	Digital Input 4
28	Digital Input 5
29	Digital Input 6
Type	Negative or positive logic digital inputs
Logic mode controlled by...	Pr **8.29**
Voltage range	0 V to +24 V
Absolute maximum applied voltage range	±30 V
Impedance	6 kΩ
Input thresholds	10.0 V ±0.8 V
Sample / Update period	250 µs with destinations as Pr **6.35** or Pr **6.36**. 600 µs with destination as Pr **6.29**. 4 ms in all other cases.

30	0V common
Function	**Common connection for all external devices**

Refer to section 5.1 *Unidrive SP control terminals* on page 74 for further information.

31	SAFE TORQUE OFF function (drive enable)
Type	Positive logic only digital input
Voltage range	0 V to +24 V
Absolute maximum applied voltage	±30 V
Logic Threshold	15.5 V ±2.5 V
Low state maximum voltage for SIL3 and EN954-1 category 3	2 V (or open-circuit)
Response time	Nominal: 8 ms Maximum: 20 ms

SAFE TORQUE OFF function has been approved by BGIA as meeting the requirements of the following standards, for the prevention of unexpected starting of the drive:

EN 61800-5-2:2007	SIL 3
EN ISO 13849-1:2006	PL e
EN 954-1:1997	Category 3

The SAFE TORQUE OFF function may be used in a safety-related application in preventing the drive from generating torque in the motor to a high level of integrity. The system designer is responsible for ensuring that the complete system is safe and designed correctly according to the relevant safety standards.

41 42	Relay contacts
Contact voltage rating	240 Vac, Installation over-voltage category II
Contact maximum current rating	2 A AC 240 V 4 A DC 30 V resistive load 0.5 A DC 30 V inductive load (L/R = 40 ms)
Contact minimum recommended rating	12 V 100 mA
Contact type	Normally open
Default contact condition	Closed when power applied and drive OK
Update period	4 ms

3.4 Encoder support

Figure 3-8 Location of encoder connector

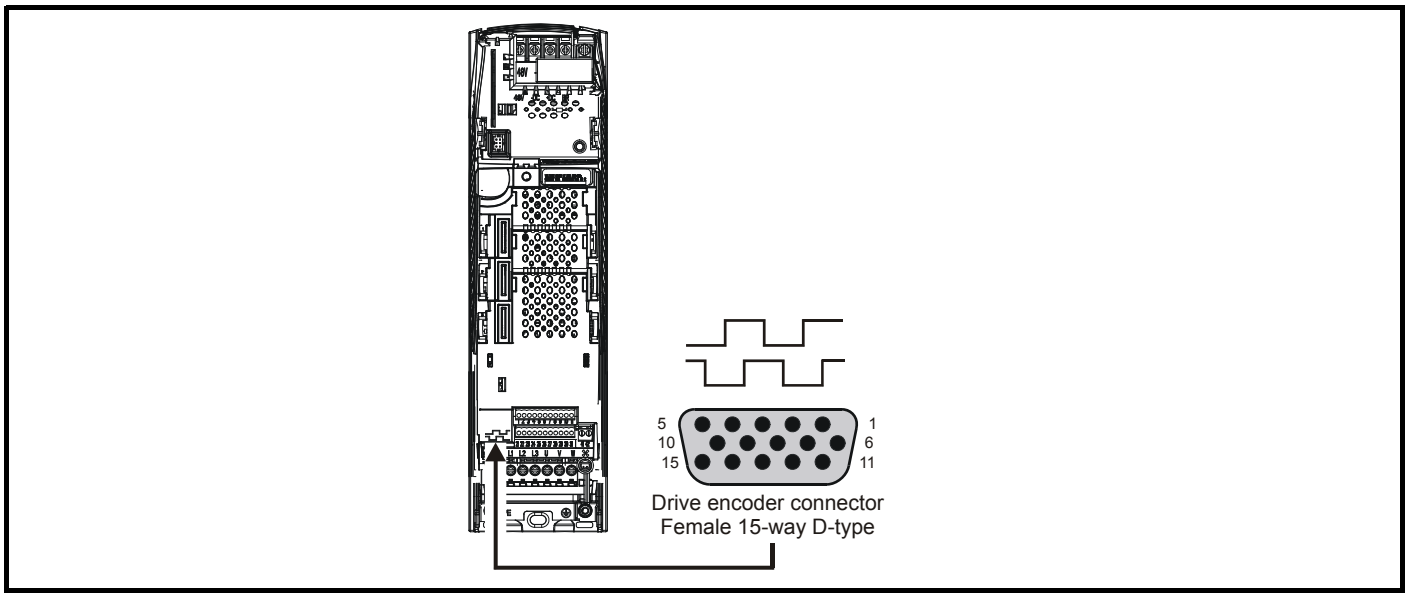

Table 3-1 Encoder types

Encoder Type (**F03**, Pr **3.38**)		Description
Ab	0	Quadrature incremental encoder with or without a marker pulse.
Fd	1	Quadrature incremental encoder with frequency and direction pulses, with or without a marker pulse.
Fr	2	Quadrature incremental encoder with forward and reverse pulses, with or without a marker pulse.
Ab.SErVO	3	Quadrature incremental encoder with UVW commutation signals, with or without a marker pulse.
Fd.SerVO	4	Quadrature incremental encoder with frequency and direction pulses plus UVW commutation signals, with or without a marker pulse.
Fr.SErVO	5	Quadrature incremental encoder with forward and reverse pulses plus UVW commutation signals, with or without a marker pulse.
SC	6	SinCos encoder no marker pulse or serial communications.
SC.HiPEr	7	SinCos encoder with HiPErface serial communications interface (Stegmann protocol).
EndAt	8	EndAt serial communications encoder (Heidenhain protocol).
SC.EndAt	9	SinCos encoder with EndAt serial communications interface (Heidenhain protocol).
SSI	10	SSI serial communications encoder.
SC.SSI	11	SinCos encoder with SSI serial communications interface.

Table 3-2 Additional encoder support

Encoder Type (**F03**, Pr **3.38**)		Description
SErVO	N/A	Encoder with only UVW commutation signals. Set up requires Pr **3.38** = 3, 4 or 5, Pr **3.34** = 0 Drive Encoder Lines
SC.SErVO	N/A	SinCos encoder with UVW commutation signals. This encoder type is only supported on the SM-Universal Encoder Plus solutions modules.
SinCos + reference marker signal	N/A	SinCos encoders like the ERN480 with a reference marker signal.
SinCos + additional absolute track	N/A	SinCos encoders like the ERN1387 or ERN487 with an additional absolute track.

Encoder types 0 through to 5 provide low-resolution feedback and should not be used for applications requiring high levels of performance.

When operating with a permanent magnet servo motor an absolute feedback device is required to derive position at power-up. Absolute feedback devices include the xx.SerVO, SC.xx, EndAt and SSI. If a standard incremental encoder Ab, Fd, Fr or SC is used when operating with a permanent magnet servo motor a phasing test is required at every power-up to derive the absolute position.

Table 3-3 Encoder connector details

Terminal	Encoder Type (**F03**, Pr **3.38**)											
	Ab (0)	**Fd** (1)	**Fr** (2)	**Ab.SErVO** (3)	**Fd.SErVO** (4)	**Fr.SErVO** (5)	**SC** (6)	**SC.HiPEr** (7)	**EndAt** (8)	**SC.EndAt** (9)	**SSI** (10)	**SC.SSI** (11)
1	A	F	F	A	F	F	Cos			Cos		Cos
2	A\	F\	F\	A\	F\	F\	Cosref			Cosref		Cosref
3	B	D	R	B	D	R	Sin			Sin		Sin
4	B\	D\	R\	B\	D\	R\	Sinref			Sinref		Sinref
5	Z*							Encoder input - Data (input/output)				
6	Z*							Encoder input - Data\ (input/output)				
7	Simulated encoder Aout, Fout**			U			Simulated encoder Aout, Fout**					
8	Simulated encoder Aout\, Fout**			U\			Simulated encoder Aout\, Fout**					
9	Simulated encoder Bout, Dout**			V			Simulated encoder Bout, Dout**					
10	Simulated encoder Bout\, Dout**			V\			Simulated encoder Bout\, Dout**					
11				W					Encoder input - Clock (output)			
12				W\					Encoder input - Clock\ (output)			
13	+V***											
14	0V common											
15	th****											

* Marker pulse is optional

** Simulated encoder output (A, F, A\, F\ and B, D, B\, D\) only available in open loop mode

*** The encoder supply is selectable through parameter **F06**, **3.36** to 5, 8 or 15 Vdc

**** Terminal 15 is a parallel connection to T8 analog input 3 on the drives control connections. If this is to be used as a thermistor input, ensure that Pr **7.15** is set to 'th.sc' (7), 'th' (8) or 'th.diSP' (9).

NOTE

SSI encoders typically have maximum data rate of only 500 k baud. When an SSI only encoder is used for speed feedback in closed loop operation, a speed feedback filter Pr **3.42** is required due to the time taken for the position information to be transferred from the encoder to the Unidrive SP. The addition of the speed feedback filter means that SSI only encoders are not suitable for speed feedback in applications that are dynamic or high-speed.

3.4.1 Specifications

Feedback device connections

Ab, Fd, Fr, Ab.SErVO, Fd.SErVO and Fr.SErVO encoders

1	**Channel A, Frequency or Forward inputs**
2	**Channel A\, Frequency\ or Forward\ inputs**
3	**Channel B, Direction or Reverse inputs**
4	**Channel B\, Direction\ or Reverse\ inputs**

Type	EIA 485 differential receivers
Maximum input frequency	V01.06.01 and later: 500 kHz V01.06.00 and earlier: 410 kHz
Line loading	<2 unit loads
Line termination components	120 Ω (switchable)
Working common mode range	+12 V to –7 V
Absolute maximum applied voltage relative to 0 V	±25 V
Absolute maximum applied differential voltage	±25 V

5	**Marker pulse channel Z**
6	**Marker pulse channel Z**
7	**Phase channel U**
8	**Phase channel U**
9	**Phase channel V**
10	**Phase channel V**
11	**Phase channel W**
12	**Phase channel W**

Type	EIA 485 differential receivers
Maximum input frequency	512 kHz
Line loading	32 unit loads (for terminals 5 and 6) 1 unit load (for terminals 7 to 12)
Line termination components	120 Ω (switchable for terminals 5 and 6, always in circuit for terminals 7 to 12)
Working common mode range	+12 V to –7 V
Absolute maximum applied voltage relative to 0 V	+14 V to -9 V
Absolute maximum applied differential voltage	+14 V to -9 V

SC, SC.HiPEr, EndAt, SC.EndAt, SSI and SC.SSI encoders

1	**Channel Cos***
2	**Channel Cosref***
3	**Channel Sin***
4	**Channel Sinref***

Type	Differential voltage
Maximum Signal level	1.25 V peak to peak (sin with regard to sinref and cos with regard to cosref)
Maximum input frequency	See Table 3-4
Maximum applied differential voltage and common mode voltage range	± 4V

For the SinCos encoder to be compatible with Unidrive SP, the output signals from the encoder must be a 1 V peak to peak differential voltage (across Sin to Sinref and Cos to Cosref).

The majority of encoders have a DC offset on all signals. Stegmann encoders typically have a 2.5 Vdc offset. The Sinref and Cosref are a flat DC level at 2.5 Vdc and the Cos and Sin signals have a 1 V peak to peak waveform biased at 2.5 Vdc.

Encoders are available which have a 1 V peak to peak voltage on Sin, Sinref, Cos and Cosref. This results in a 2 V peak to peak voltage seen at the drive's encoder terminals. It is not recommended that encoders of this type are used with Unidrive SP, and that the encoder feedback signals should meet the above parameters (1 V peak to peak).

Resolution: The sinewave frequency can be up to 500 kHz but the resolution is reduced at high frequency. Table 3-4 shows the number of bits of interpolated information at different frequencies and with different voltage levels at the drive encoder port. The total resolution in bits per revolution is the ELPR plus the number of bits of interpolated information. Although it is possible to obtain 11 bits of interpolation information, the nominal design value is 10 bits.

* Not used with EndAt and SSI communications only encoders.

5	**Marker pulse channel Z**
6	**Marker pulse channel Z**

Type	EIA 485 differential receivers
Maximum input frequency	512 kHz
Line loading	32 unit loads
Line termination components	120 Ω (switchable)
Working common mode range	+12 V to –7 V
Absolute maximum applied voltage relative to 0V	+14 V to -9 V
Absolute maximum applied differential voltage	+14 V to -9 V

NOTE

This signal is available from drive firmware version 01.16.00 and above.

Table 3-4 Feedback resolution based on frequency and voltage level

Volt/Freq	1kHz	5kHz	50kHz	100kHz	200kHz	500kHz
1.2	11	11	10	10	9	8
1.0	11	11	10	9	9	7
0.8	10	10	10	9	8	7
0.6	10	10	9	9	8	7
0.4	9	9	9	8	7	6

5	**Data****
6	**Data****
11	**Clock*****
12	**Clock*****

Type	EIA 485 differential transceivers
Maximum frequency	2 MHz
Line loading	32 unit loads (for terminals 5 and 6) 1 unit load (for terminals 11 and 12)
Working common mode range	+12 V to –7 V
Absolute maximum applied voltage relative to 0V	±14 V
Absolute maximum applied differential voltage	±14 V

** Not used with SC encoders.

*** Not used with SC and SC.HiPEr encoders.

Frequency slaving outputs (open loop only)

Ab, Fd, Fr, SC, SC.HiPEr, EndAt, SC.EndAt, SSI and SC.SSI encoders

7	**Frequency slaving out channel A**
8	**Frequency slaving out channel A**
9	**Frequency slaving out channel B**
10	**Frequency slaving out channel B**

Type	EIA 485 differential transceivers
Maximum output frequency	512 kHz
Absolute maximum applied voltage relative to 0 V	± 14 V
Absolute maximum applied differential voltage	± 14 V

Common to all Encoder types

13	Encoder supply voltage
Supply voltage	5.15 V ±2 %, 8 V ±5 % or 15 V ±5 %
Maximum output current	300 mA for 5 V and 8 V 200 mA for 15 V

The voltage on terminal 13 is controlled by Pr **3.36**. The default for this parameter is 5 V (0) but this can be set to 8 V (1) or 15 V (2). Setting the encoder voltage supply too high for the encoder could result in damage to the feedback device.

The termination resistors should be disabled if the outputs from the encoder are higher than 5 V.

14	0V common

15	Motor thermistor input

This terminal is connected internally to terminal 8 of the signal connector. Connect only one of these terminals to a motor thermistor. Analog input 3 must be in thermistor mode, Pr **7.15** = th.SC (7), th (8) or th.diSP (9).

3.5 Position feedback devices and installation

This section covers the recommended shield and grounding connections for position feedback devices. These recommendations should be followed closely to prevent noise being induced onto the position feedback resulting in instability issues. Shielding considerations are important for PWM drive installations due to the high voltages and currents present in the output circuit with a very wide frequency spectrum, typically from 0 to 20 MHz. Position feedback devices and inputs are liable to be disturbed if careful attention is not given to managing the cable shields.

3.5.1 Cable shield requirements

- Feedback cable shields should be connected at drive terminal to 0 V
- Feedback cable shield should be connected at encoder to 0 V
- It is recommended that the shielded cable should be run in a continuous length to the terminal, to avoid the injection of noise at intermediate pigtails and to maximize the shielding benefit.

NOTE

Due to emissions from high power cables (e.g. drive output) the feedback cable should not be run in parallel lengths with these for >1 m at <300 mm apart)

- The shield connections ("pigtails") to the drive and encoder should be kept as short as possible

WARNING

Connecting the cable shield to ground at both ends carries the risk that an electrical fault might cause excessive power current to flow in the cable shield and overheat the cable.

There must be an adequately rated safety ground connection between the motor / encoder and the drive.

3.5.2 Recommended cable

The recommended cable for feedback signals is a twisted pair, shielded with an overall shield as shown.

Figure 3-9 Feedback cable, twisted pair

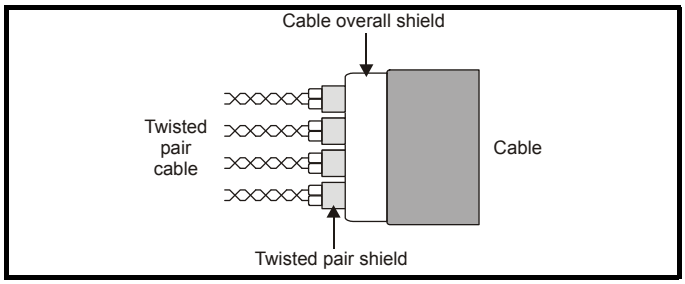

Using this type of cable also allows for the connection of the outer shield to ground and the inner shields to 0 V alone at both drive and encoder end, when required.

Figure 3-10 shows the recommended arrangements for the cable shielding and grounding.

Figure 3-10 Feedback cable connections

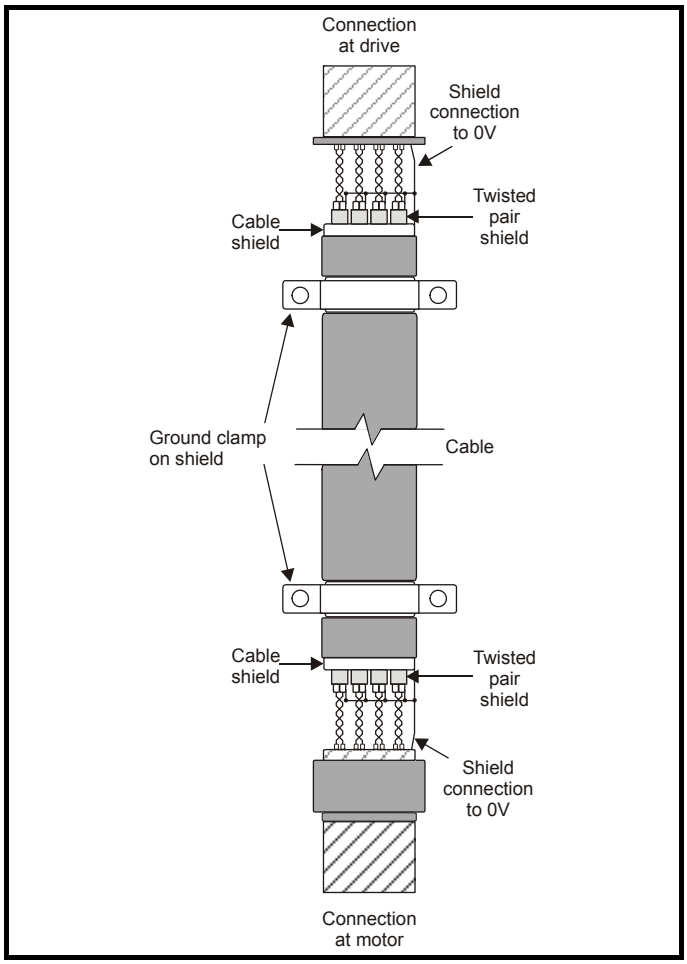

In addition to the above connections shown, if it is found that there is still noise being passed to the encoder / resolver input it is possible to make a connection directly from 0 V of the feedback device input at the drive to ground.

The ground connection can be connected directly to the grounding clamp / bracket as shown in the following.

3.5.3 Grounding hardware

The Unidrive SP is supplied with a grounding bracket, and sizes 0 to 3 with a grounding clamp, to facilitate EMC compliance. They provide a convenient method for direct grounding of cable shields without the use of "pig-tails". Cable shields can be bared and clamped to the grounding bracket using metal clips or clamps[1] (not supplied) or cable ties.

NOTE

In all cases the shield must be continued through the clamp to the intended terminal on the drive, in accordance with the connection details for the specific signal.

[1] A suitable clamp is the Phoenix DIN rail mounted SK14 cable clamp (for cables with a maximum outer diameter of 14 mm).

Figure 3-11 Use of the EMC bracket on size 0

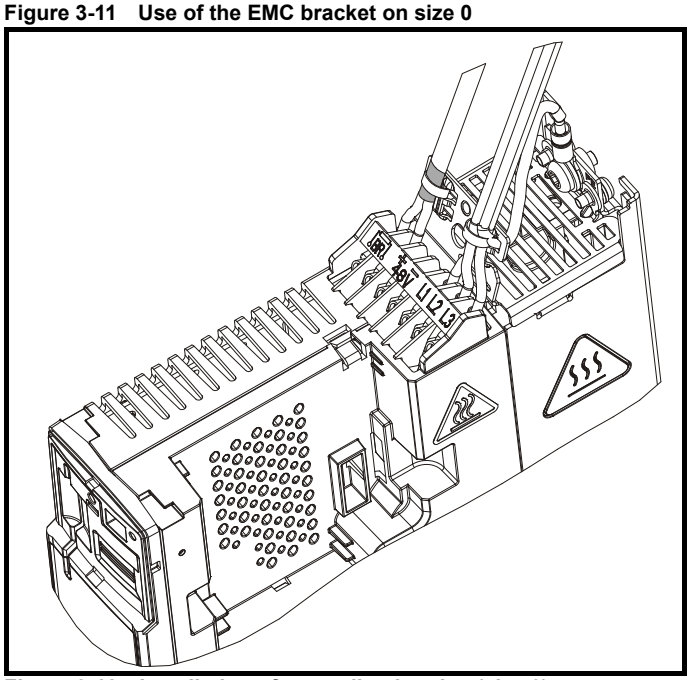

Figure 3-12 Installation of grounding bracket (size 0)

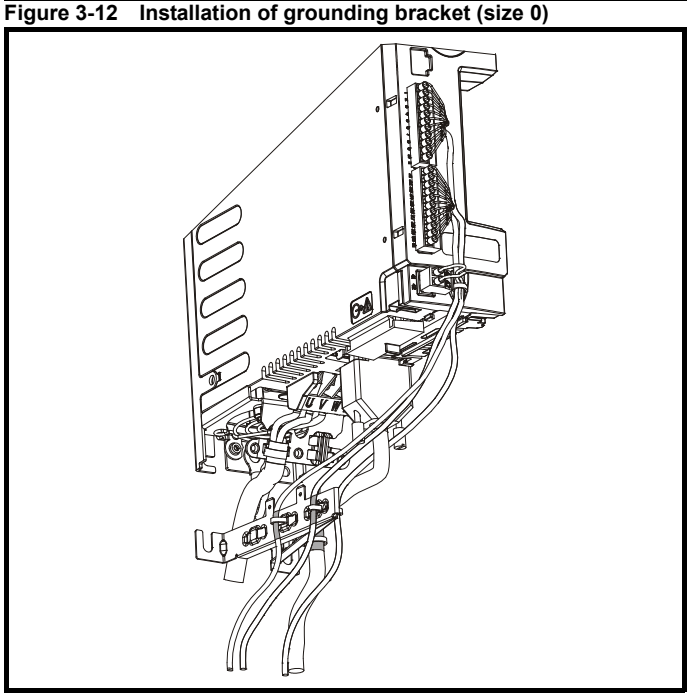

Figure 3-13 Connecting the encoder ground tab to the EMC bracket

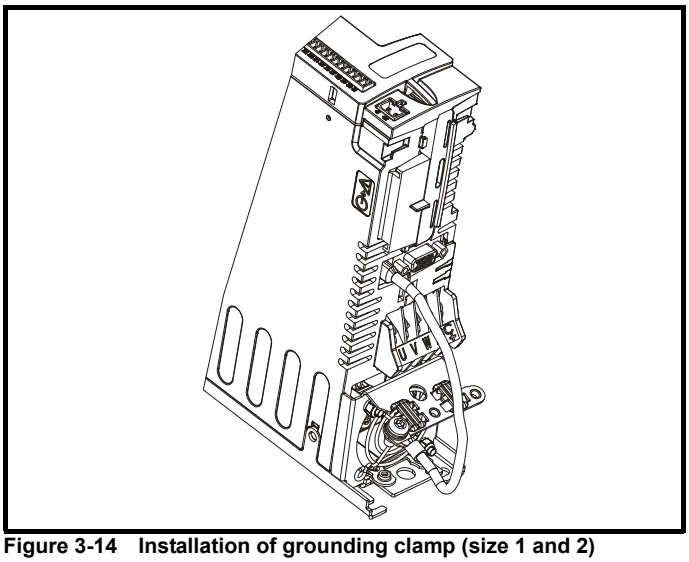

Figure 3-14 Installation of grounding clamp (size 1 and 2)

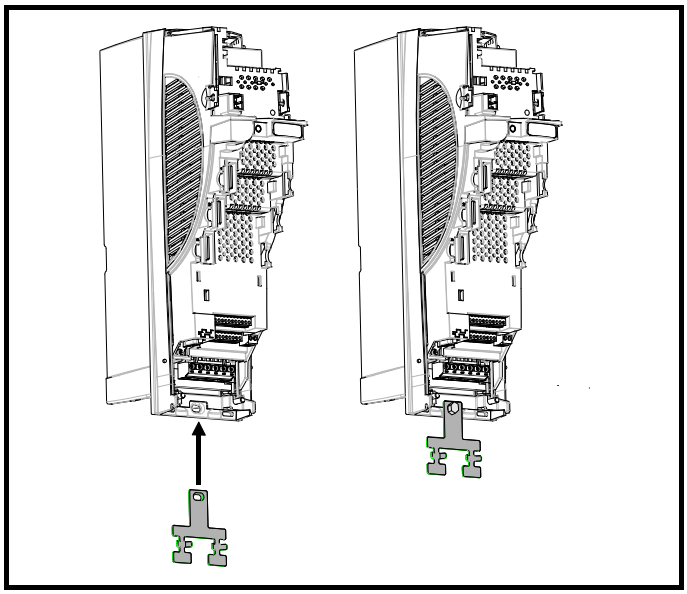

Figure 3-15 Installation of grounding clamp (size 3)

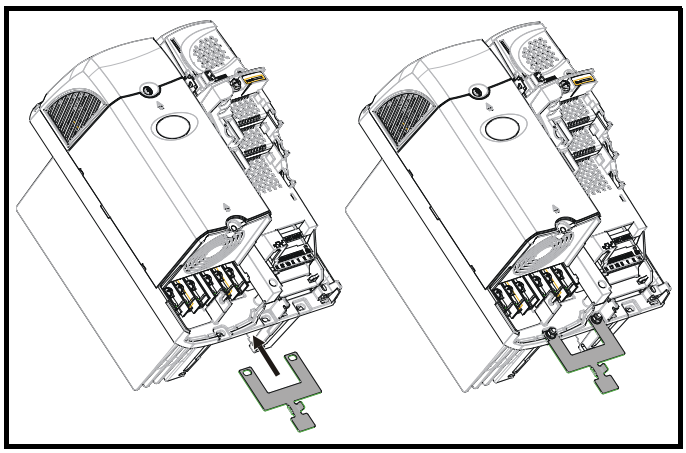

Figure 3-16 Installation of grounding bracket (sizes 1 to 6)

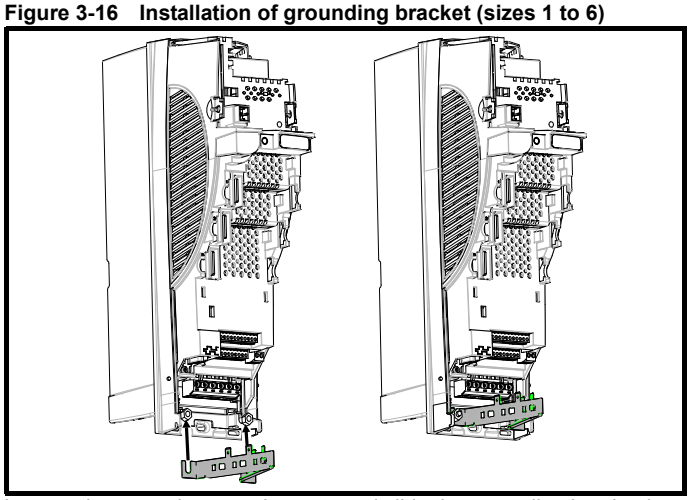

Loosen the ground connection nuts and slide the grounding bracket in the direction shown. Once in place, re-tighten the ground connection nuts.

> **WARNING** On Unidrive SP size 1 and 2, the grounding bracket is secured using the power ground terminal of the drive. Ensure that the supply ground connection is secure after installation / removing the grounding bracket. Failure to do so will result in the drive not being grounded.

A fastening tab is located on the grounding bracket for the purpose of connecting the drive 0 V to ground should the user require to do so.

When a Unidrive SP size 4 or 5 is through-panel mounted, the grounding link bracket must be folded upwards. A screw can be used to secure the bracket or it can be located under the mounting bracket to ensure that a ground connection is made. This is required to provide a grounding point for the grounding bracket as shown Figure 3-17.

Figure 3-17 Size 4 and 5 grounding link bracket in its surface mount position (as supplied)

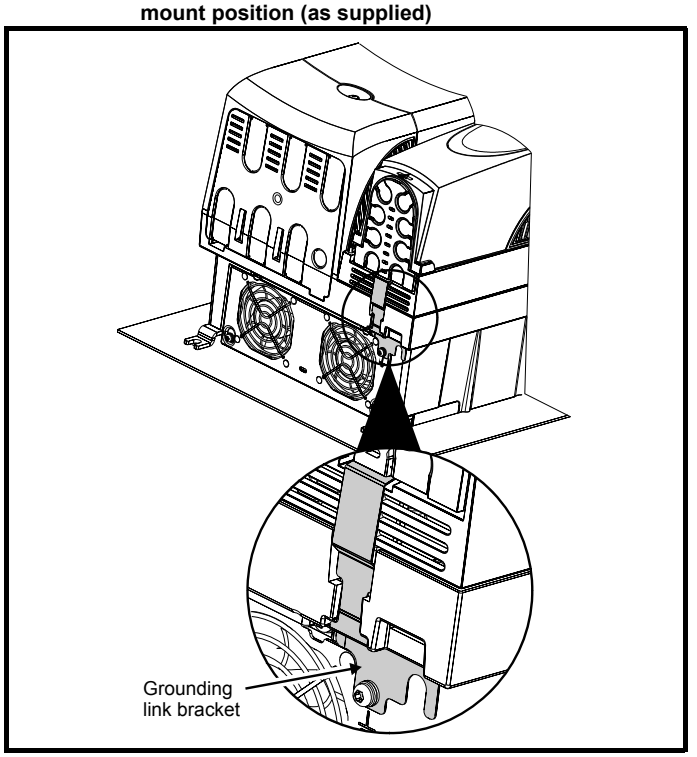

Figure 3-18 Size 4 and 5 grounding link bracket folded up into its through- panel mount position

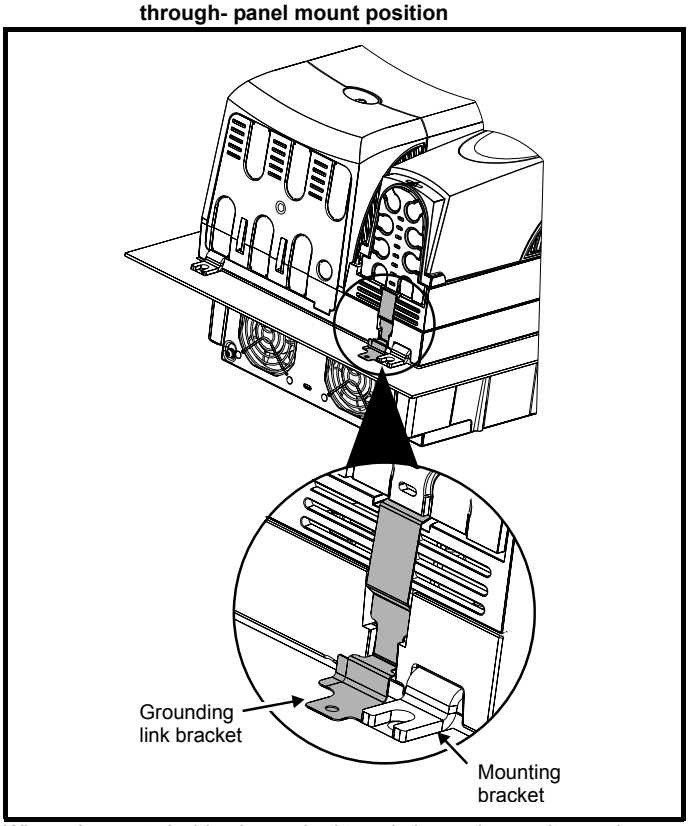

Where the control wiring is required to exit the enclosure, it must be shielded and the shield(s) clamped to the drive using the grounding bracket as shown in Figure 3-19. Remove the outer insulating cover of the cable to ensure the shield(s) make contact with the bracket, but keep the shield(s) intact until as close as possible to the terminals

NOTE

Alternatively, wiring may be passed through a ferrite ring, part no. 3225-1004.

Figure 3-19 Grounding of signal cable shields using the grounding bracket

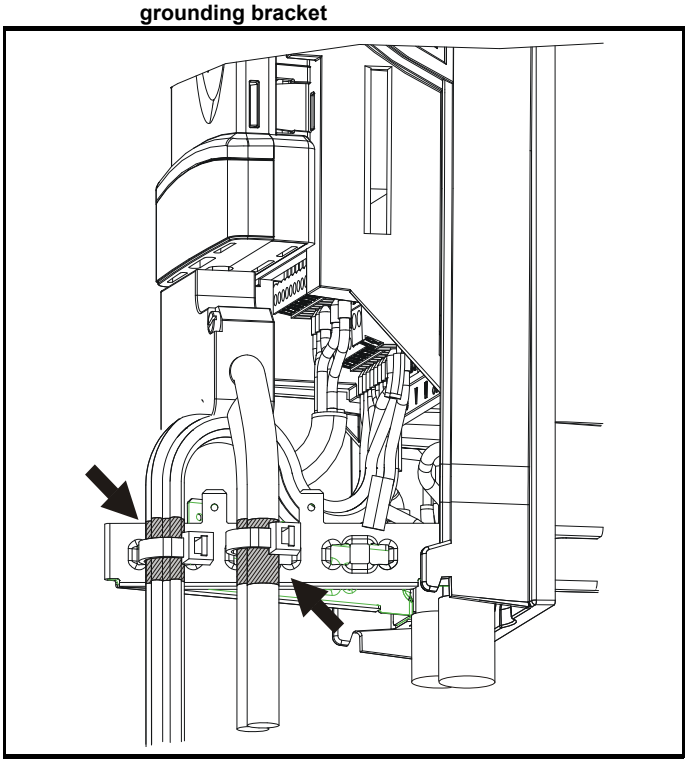

3.6 Configuring the feedback device

It is possible to use different encoder types. The following settings must be performed and are dependent on the operating mode and encoder type.

3.6.1 Restrictions

Although Pr **3.34** can be set to any value from 0 to 50,000 there are restrictions on the values actually used by the drive. These restrictions are dependent on the Unidrive SP software version as follows:

Software version V01.06.01 and later

Table 3-5 Restrictions of drive encoder lines per revolution

Position feedback device	Equivalent lines per revolution used by the drive
Ab, Fd, Fr, Ab.SErVO, Fd.SErVO, Fr.SerVO, SC	The drive uses the value in Pr **3.34**.
SC.HiPEr, SC.EndAt, SC.SSI (rotary encoders)	If Pr **3.34** ≤1, the drive uses the value of 1. If 1< Pr **3.34** <32,768, the drive uses the value in Pr **3.34** rounded down to nearest value that is a power of 2. If Pr **3.34** ≥32,768, the drive uses the value of 32,768.
SC.HiPEr, SC.EndAt, SC.SSI (linear encoders)	The drive uses the value in Pr **3.34**.

Software version V01.06.00 and earlier

Table 3-6 Restrictions of drive encoder lines per revolution

Position feedback device	Equivalent lines per revolution used by the drive
Ab, Fd, Fr	If Pr **3.34** <2, the drive uses the value of 2. If 2≤ Pr **3.34** .≤16,384, the drive uses the value in Pr **3.34.** If Pr **3.34** >16,384, the drive uses the value in Pr **3.34** rounded down to nearest value divisible by 4.
Ab.SErVO, Fd.SErVO, Fr.SErVO	If Pr **3.34** ≤2, the drive uses the value of 2. If 2< Pr **3.34** <16,384, the drive uses the value in Pr **3.34** rounded down to nearest value that is a power of 2. If Pr **3.34** ≥16,384, the drive uses the value of 16,384.
SC, SC.HiPEr, SC.EndAt, SC.SSI	If Pr **3.34** ≤2, the drive uses the value of 2. If 2< Pr **3.34** <32,768, the drive uses the value in Pr **3.34** rounded down to nearest value that is a power of 2. If Pr **3.34** ≥32,768, the drive uses the value of 32,768.

3.6.2 Encoder initialization

At power-up Pr **3.48** is initially zero, but is set to one when the drive encoder and any encoders connected to any Solutions Modules have been initialized. The drive cannot be enabled until this parameter is set, Pr **3.48** = On.

Encoder initialization will occur as follows:

- At drive power-up
- When requested by the user via Pr **3.47**
- When trips PS.24V, Enc1 to Enc8, or Enc11 to Enc17 are reset
- The encoder number of lines per revolution Pr **3.34** or the number of motor poles **F09,** Pr **5.11** are changed (software version V01.08.00 and later).

Initialization only affects encoder types with communications (SSI, EndAt or HiPEr) at power-up or when requested by setting Pr **3.47** = On**.** During initialization at power-up or following a re-initialization request, the encoder is restarted and the present absolute position is updated in the drive using the communications interface (SSI, EndAt or HiPEr) from the encoder to the drive.

3.6.3 Closed loop vector mode

Table 3-7 details the parameters required to configure both encoders and resolver feedback devices for operation in closed loop vector mode. For resolver feedback devices these must be connected to the Unidrive SP using an SM-Resolver.

If further detailed information is required on the encoder set-up and configuration refer to the *Unidrive SP User Guide*.

NOTE

When referring to parameters which are displayed as Pr **xx.13** for example, the **xx** indicates which slot the Solutions Module being referred to is installed in. Therefore **xx** = **15** (slot 1), **xx** = **16** (slot 2) or **xx** = **17** (slot 3).

NOTE

If a resolver is being used with the SM-Resolver, it is possible to generate an "EnC2" trip on the drive due to the wire break detection on the drives encoder port detecting no encoder connected. When using only a resolver ensure Pr **3.40** = 0, this disables the error detection on the drives main encoder input port.

Table 3-7 Closed loop vector feedback set-up

Feedback	Pr Setting	Default	Note
Encoder	Pr **3.26** = drv	drv	Speed feedback selector (drive)
	F05, Pr **3.34** = PPR	1024	Drive encoder lines per revolution
	F06, Pr **3.36** = 0, 1, 2	0	Drive encoder supply voltage: 5 V(0) / 8 V(1) / 15 V(2)
	F03, Pr **3.38** = Ab	Ab	Drive encoder type
	Pr **3.39** = 0, 1, 2	1	Drive termination resistors. Encoder wire break disabled when termination resistors disabled
SinCos	Pr **3.26** = drv	drv	Speed feedback selector (drive)
	F05, Pr **3.34** = PPR	1024	Drive encoder lines per revolution
	F06, Pr **3.36** = 0, 1, 2	0	Drive encoder supply voltage: 5 V(0) / 8 V(1) / 15 V(2)
	F03, Pr **3.38** = SC	SC	Drive encoder type
Resolver	Pr **3.26** = Slot2	drv	Speed feedback selector Slot2 = Solutions Module
	Pr **3.40** = 0	1	Disable drive encoder error detection
	Pr **x.10**	4096	Resolver feedback resolution
	Pr **x.13**	2:1 (1 or 2)	Resolver excitation - 2:1 (1 or 2) or 3:1 (0)

3.6.4 Servo mode

The following section covers the set-up of absolute feedback devices for closed loop servo applications. If the required feedback device is not covered in this section, refer to the *Unidrive SP User Guide* for further detailed information.

Table 3-8 Servo feedback set-up

Feedback	Pr Setting	Default	Note
Encoder	Pr **3.25** = 0	0	Phase offset value
	Pr **3.26** = drv	drv	Speed feedback selector (Drive)
	F05, Pr **3.34** = PPR	1024	Drive encoder lines per revolution
	F06, Pr **3.36** = 0, 1, 2	0	Drive encoder power supply 5 V(0), 8 V(1), 15 V(2)
	F03, Pr **3.38** = Ab.SErVo	Ab.SErVo	Drive encoder type
	Pr **3.39** = 0, 1, 2	1	Drive termination resistors. Encoder wire break disabled when termination resistors disabled
SinCos	Pr **3.25** = 0	0	Phase offset value
	Pr **3.26** = drv	drv	Speed feedback selector (Drive)
	Pr **3.33** = 16	16	Drive encoder turn bits
	F05, Pr **3.34** = PPR	1024	Drive encoder lines per revolution
	Pr **3.35** = 0	0	Drive encoder single turn comms bits
	F06, Pr **3.36** = 0, 1, 2	0	Drive encoder power supply 5 V(0), 8 V(1), 15 V(2)
	Pr **3.37** = 0	0	Drive encoder comms baud rate (Not used with HiPEr encoders)
	F03, Pr **3.38** = SC.Hiper SC.EndAt SC.SSI	Ab.SErVo	Drive encoder type
	Pr **3.40** = 0	1	Disable drive encoder error detection
	F04, Pr **3.41** = 0 or 1	0	Drive comms encoder auto configuration OR SSI format Binary / Gray code
Resolver	Pr **3.25** = 0	0	Phase offset value
	Pr **3.26** = Slot2	drv	Speed feedback selector Slot2 = Solutions Module.
	Pr **3.40** = 0	1	Disable drive encoder error detection
	Pr **x.10** = 4096	4096	Resolver feedback resolution
	Pr **x.13** = 2	2:1 (1 or 2)	Resolver excitation – 2:1 (1 or 2) or 3:1 (0)

4 Elevator Solution Software

The Elevator Solution Software is configurable for operation in open loop, closed loop vector and servo modes. The Elevator Solution Software in the Unidrive SP generates a velocity profile for the control of the motor, while the elevator controller generates control signals for the Unidrive SP and Elevator Solution Software. Signals from the elevator shaft (floor levels, floor calls) go directly to the elevator controller and are used to generate and sequence the control signals to the Unidrive SP. The control signals to the Unidrive SP can include the drive enable, direction and speed selection, brake control and motor contactor control. The elevator controller, with signals from the elevator shaft determines the start, direction and operating speed selection, of the elevator along with safety related control functions.

NOTE

Additional control such as, motor contactors, brake control, pre-door opening can be configured in either by the elevator controller or the Unidrive SP and Elevator Solution Software. The safety requirements of the elevator are controlled through the elevator controller.

4.1 Positioning profile

There are two positioning profiles that can be selected when operating with the Unidrive SP and Elevator Solution Software, creep-to-floor positioning and direct-to-floor positioning.

Figure 4-1 Positioning profiles

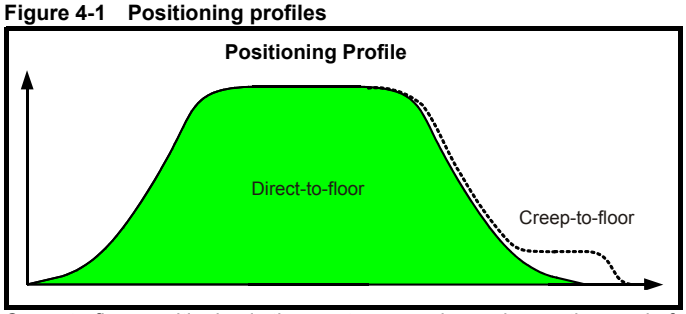

Creep-to-floor positioning is the most commonly used operating mode for elevators and has therefore been selected as the default setting for the Elevator Solution Software through Pr **20.13** = 0. For some applications, especially high-speed elevators and long travel distance elevators, direct-to-floor positioning control can be used which overcomes inherent delays associated with the creep-to-floor.

4.2 Positioning mode

The creep-to-floor and direct-to-floor positioning modes are selected through Pr **20.13** as detailed in Table 4-1:

Table 4-1 Positioning modes

Parameter	Function
Pr **20.13** = 0	Direct-to-floor positioning disabled. **Creep-to-floor active**
Pr **20.13** = 1	**Direct-to-floor** with Stop signal via analog input 1 (T5)
Pr **20.13** = 2	**Direct-to-floor** with Stop signal via analog input 2 (T7)
Pr **20.13** = 3	**Direct-to-floor** with Stop signal via analog input 3 (T8)
Pr **20.13** = 4	**Direct-to-floor** with disable speed signal control

Both the creep-to-floor and direct-to-floor positioning modes are covered in detail in section 4.4 *Creep-to-floor operation* on page 35 and section 4.5 *Direct-to-floor operation* on page 37.

4.3 Features

There are a number of features available within the Elevator Solution Software for both open loop and closed loop operation. Some of these features as listed are available through both the F Menu and advanced parameters, and some are only available through the advanced parameters in the Unidrive SP. The most common used features for creep-to-floor positioning mode (default) have been made available in the current F Menu.

Table 4-2 Elevator Solution Software features

Elevator Solution Software feature	Creep-to-floor	Direct-to-floor	F Menu	Advanced Menu	Drive Mode			Default
					OL	VT	SV	
Creep-to-floor	✓		✓	✓	✓	✓	✓	ON
Operational rpm configuration	✓	✓	✓	✓	✓	✓	✓	ON
Brake control and compensation	✓	✓	✓	✓	✓	✓	✓	ON
Start locking position control	✓	✓	✓ *	✓		✓	✓	ON
Start optimizer	✓	✓	✓ *	✓	✓	✓	✓	ON
Variable speed loop gains	✓	✓	✓ *	✓		✓	✓	ON
Variable current loop gains	✓	✓	✓ *	✓		✓	✓	OFF
Variable current loop filter	✓	✓	✓*	✓		✓	✓	ON
Advanced door opening	✓	✓	✓*	✓	✓	✓	✓	ON
Direct-to-floor		✓		✓		✓	✓	OFF
Floor sensor correction	✓	✓		✓		✓	✓	OFF
Peak curve operation	✓	✓		✓		✓	✓	OFF
Short floor landing	✓			✓	✓	✓	✓	OFF
Motor contactor control	✓	✓		✓	✓	✓	✓	OFF
Variable stator resistance	✓			✓	✓			OFF
Fast stop	✓	✓		✓	✓	✓	✓	OFF
Fast start	✓	✓		✓		✓	✓	OFF
Load measurement	✓	✓		✓		✓	✓	OFF
Inertia compensation	✓	✓		✓	✓	✓	✓	OFF
Load cell compensation	✓	✓		✓	✓	✓	✓	OFF
Releasing blocked elevator	✓	✓		✓	✓	✓	✓	OFF
Stationary autotune	✓	✓		✓			✓	OFF
ENP electronic nameplate	✓	✓	✓	✓		✓	✓	OFF

✓ * Features are available in the F Menu but also have further adjustment in the advanced parameter menus. Refer to the relevant sections following for further detailed information.

Optimization of the different segments of the creep-to-floor and direct-to-floor positioning modes are available as detailed.

- **Operational rpm configuration**

The operational rpm configuration sets up the motor rated speed in rpm using the elevator parameters entered by the user e.g. elevator speed mm/s, roping, sheave diameter.

- **Brake control features**

Brake control can be set-up to be controlled from both the drive and the Elevator Solution Software, or from the elevator controller. In addition to providing the brake control function, the Elevator Solution Software can also carry out brake monitoring using two digital inputs on the drive. In the case of incorrect operation, the Elevator Solution Software will generate a t0xx trip.

The brake contact monitoring is available with software V01.22.00 and later.

Automatic compensation for brake loading applied during stopping sequence is active from V01.23.00 Elevator Solution Software. The brake load compensation is enabled with Pr **71.62,** and carries out automatic compensation during the next start using the value of the load present during the previous stop, displayed in Pr **71.63** in 0.01 % units.

- **Start locking position control**

With both gearless elevators and planetary gears a position controller is particularly suitable for the start. This prevents any movement of the motor during brake opening.

- **Start optimizer**

This feature can be enabled to overcome such things as static friction in the elevator shaft and other general starting issues to ensure a smooth controlled start.

- **Fixed and variable speed and current loop gains for Start, Travel and Positioning**

Multiple gains are available which can be used to achieve high starting torque, speed holding during brake operation and high levels of ride comfort.

- **Multiple current loop filters for start travel and positioning**

The multiple current loop filters can be implemented to reduce acoustic noise & instability generated for example by low resolution speed feedback high speed loop and/or current loop gains.

- **Advanced door opening**

Advanced door opening is available which allows the user to define a speed in mm/s at which door opening begins. This feature is used to reduce elevator journey times.

- **Floor sensor correction**

Independent of the selected profile (creep-to-floor or direct-to-floor), additional floor sensor correction can be implemented. This provides improved accurate distance correction if a floor sensor can be detected in the range of 50-500 mm before the flush or level with floor target position. Floor sensor correction should be used with direct-to-floor positioning on elevators with speeds in excess of 1m/s. This ensures maximum accuracy.

- **Peak curve operation**

This function guarantees a constant stopping distance, independent of the moment when the signal to stop occurs. This allows the use of a single speed for different floor levelling distances.

- **Short distance landing**

If the floor distance is smaller than the braking time distance from the selected speed, then the peak curve operation cannot be used. This is the case if the floor distance is less than 0.7 m, the Elevator Solution Software provides the short distance landing with real distance control.

- **Motor contactor control**

Motor contactor control can be set-up to be controlled from both the drive and the Elevator Solution Software, or from the Elevator controller. In addition to providing the motor contactor control the Elevator Solution Software can also monitor the motor contactor using a digital input on the drive, in the case of incorrect operation the Elevator Solution Software will generate a t0xx trip.

The motor contactor control monitoring is available with software V01.22.00 and later.

- **Variable stator resistance**

For operation with creep-to-floor in open loop mode, there is a variable stator resistance feature which allows both a start and stop stator resistance to be defined to ensure maximum torque on the motor.

- **Fast stop**

The fast stop is available mainly for commissioning / start up and inspection of the elevator. This feature allows the User to define a fast stop deceleration rate that is greater than the standard stop rate.

- **Fast start**

The fast start allows the motor to be magnetized and the brake opened while the elevator car doors are closing.

- **Load measurement**

Load measurement and direction of load is implemented in the Elevator Solution Software. This feature measures the percentage load along with the direction of the load to allow rescue operation in the direction with least load.

- **Load cell – torque feed forward**

The Elevator Solution Software allows for load cell compensation to be connected to the Unidrive SP which can overcome starting issues inherent in the mechanical configuration.

- **Inertia compensation**

Inertia compensation can be implemented to overcome elevator system inertia. Without inertia compensation high speed loop gains may be required due to the inertia which can result in acoustic noise and reduced ride comfort.

- **Blocked elevator releasing function**

The blocked elevator releasing function allows for a blocked elevator (locked in mechanical brackets due to an overspeed) to be released. The Unidrive SP and Elevator Solution Software will attempt to release the elevator during the next start using creep speed and shaking the elevator while monitoring the blocked elevator enable Pr **19.45** = On.

- **Stationary autotune for PM synchronous motors**

A stationary autotune is available for PM synchronous motors which avoids the need to remove the ropes to complete the phasing test.

The stationary autotune feature is available with software V01.23.00 and later.

- **ENP electronic nameplate**

An electronic nameplate feature is available which allows the parameter set to be saved to a SC.Endat encoder installed to the motor in the system. The electronic nameplate feature then allows the parameter set to be uploaded from the SC.Endat encoder to the drive. This feature is typically used by motor manufacturers to pre-program motors and also in the event of drive replacement.

The electronic nameplate feature is available with software V01.22.00 and later.

4.4 Creep-to-floor operation

Positioning with creep-to-floor positioning is the most commonly used operating mode, and is therefore selected as the default setting for the Elevator Solution Software Pr **20.13** = 0.

For all sections of the velocity profile shown following there are independent parameters available for the jerks, acceleration and deceleration which allow the ride comfort of the elevator to be optimized. In addition to controlling the velocity profile the Elevator Solution Software also calculates the required deceleration distance in mm dependent upon the speed selected in **F50,** Pr **18.10** and the profile settings. The deceleration distance is calculated and displayed in Pr **19.08** for the activated speed. The measured deceleration distance is displayed after every travel in Pr **19.10** in mm. The measured creep distance is also available and displayed in Pr **20.21**.

The deceleration distance is independent of the load assuming drive sizing is correct, as it is not possible to control the distance without considering this. From Elevator Solution Software version 1.12 onwards the deceleration distances for all speeds are displayed in the parameters as listed Table 4-3.

The creep speed by default is set-up as parameter **F24**, Pr **18.11**. To change to another parameter refer to Pr **20.12** *Creep speed parameter number*.

Table 4-3 Operating speeds and deceleration distance

Speed selected		Deceleration distance (mm)
V1 Creep speed	**F24**, Pr **18.11**	Pr **19.05**
V2 Inspection speed	**F25**, Pr **18.12**	Pr **2.13**
V3 Nominal speed	**F26**, Pr **18.13**	Pr **2.14**
V4 Medium speed 1	**F27**, Pr **18.14**	Pr **2.15**
V5 Relevelling speed	**F28**, Pr **18.15**	Pr **2.16**
V6 Medium speed 2	**F29**, Pr **18.16**	Pr **2.17**
V7 Additional speed 1	**F30**, Pr **18.17**	Pr **2.18**
V8 Additional speed 1	Pr **20.22**	Pr **2.23**
V9 Additional speed 1	Pr **20.23**	Pr **2.24**
V10 Additional speed 1	Pr **20.24**	Pr **2.25**

For creep-to-floor operation the operating speed is selected according to the elevator landing distance. The operating speeds **V1** to **V10** are set-up in the Elevator Solution Software parameters as shown above and selected by the elevator controller via the control terminals on the Unidrive SP.

The real time demand on the elevator control system is low with creep-to-floor positioning being used. With a typical cycle time of the elevator controller of 5 ... 20 ms and the Unidrive SP of 8 ms the minimal positioning distance with creep-to-floor is calculated as follows:

The maximum creep speed distance =

Positioning distance [mm] $\geq$ **V** $_{\text{Nominal}}$ **[m/s] x 30 ms**

The stop accuracy =

Accuracy [mm] $\leq$ **V** $_{\text{creep speed}}$ **[m/s] x 30 ms**

The time required for the creep speed =

Time creep speed [ms] = positioning distance [mm] / $V_{\text{creep speed}}$ **[m/s]**

Figure 4-2 Velocity profile for creep-to-floor positioning

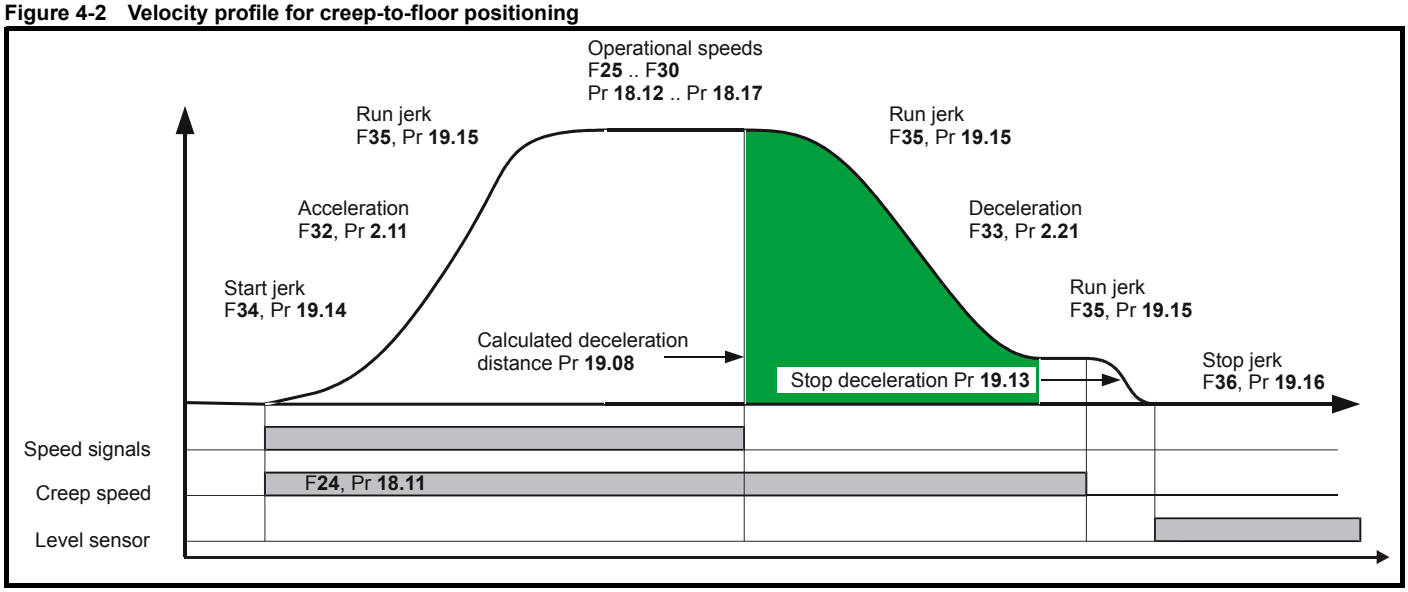

Figure 4-3 Creep-to-floor

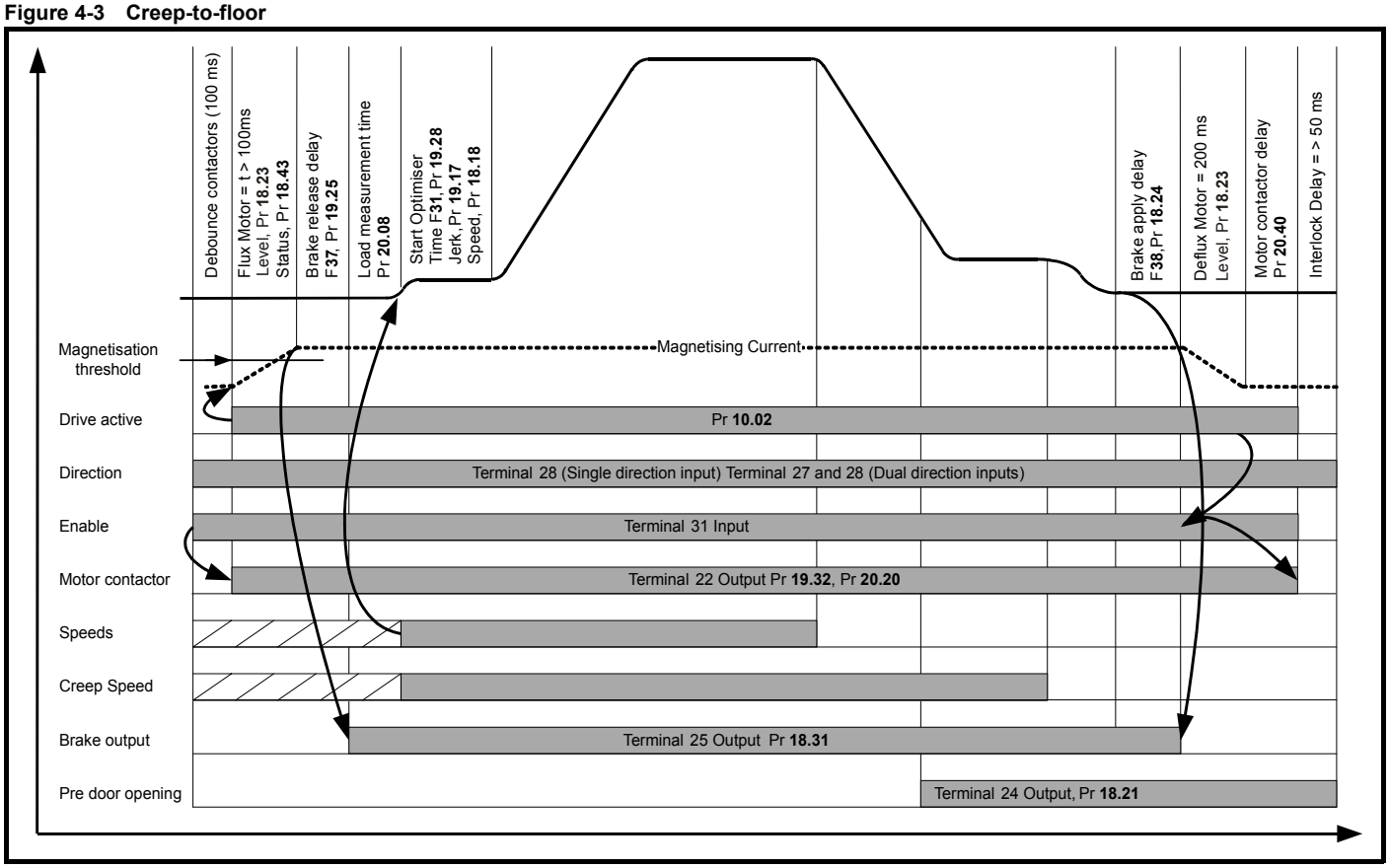

Pr **18.23** is used to adjust the magnetization current threshold level for both open loop and closed loop vector operation. For servo operation Pr **18.23** the magnetization current threshold is not required. This parameter in servo mode is therefore used to define the time taken to deflux the motor and reduce the current limits in Pr **4.05** and Pr **4.06**.

4.5 Direct-to-floor operation

For some applications, especially high-speed elevators and long travel distance elevators, direct-to-floor positioning control is often used to overcome inherent delays associated with creep-to-floor elevators.

Direct-to-floor positioning alone should only be used on elevators up to 1m/s due to the accuracy and sampling of both the Unidrive SP and elevator controller, above 1m/s floor sensor correction should be enabled in addition.

For all sections of the velocity profile shown following there are independent parameters available for the acceleration and associated jerks, with which the performance of the direct-to-floor operation can be optimized. The relevant parameters are as shown below.

The direct-to-floor positioning speed is applied according to the selected floor distance. As a function of the distance to the desired final position the elevator controller will disable the speed signal on detection of the floor stop signal and then direct decelerate to the target position. Creep speed positioning is not executed nor required.

To go directly to the target position, the deceleration is dependent on the required stopping distance. The maximum deceleration is limited by Pr **2.21** deceleration. If the correction of the deceleration rate is not sufficient, it is possible that the car will stop too late and hence overshoot the floor level.

The direct-to-floor positioning mode uses as a reference the selected speed and profile settings to calculate and display the calculated deceleration distance in Pr **19.08** in mm. The deceleration distance is controlled to this value independent of the load.

The actual distance moved is displayed in Pr **19.10** in mm reference deceleration distance.

From Elevator Solution Software version 1.12 onwards the deceleration distances for all speeds are displayed in the following parameters:

Table 4-4 Operating speeds and deceleration times

Speed selected		Deceleration distance (mm)
V1 Creep speed	N/A	N/A
V2 Inspection speed	**F25**, Pr **18.12**	Pr **2.13**
V3 Nominal speed	**F26**, Pr **18.13**	Pr **2.14**
V4 Medium speed 1	**F27**, Pr **18.14**	Pr **2.15**
V5 Relevelling speed	**F28**, Pr **18.15**	Pr **2.16**
V6 Medium speed 2	**F29**, Pr **18.16**	Pr **2.17**
V7 Additional speed 1	**F30**, Pr **18.17**	Pr **2.18**
V8 Additional speed 1	Pr **20.22**	Pr **2.23**
V9 Additional speed 1	Pr **20.23**	Pr **2.24**
V10 Additional speed 1	Pr **20.24**	Pr **2.25**

4.5.1 Position accuracy

The final deceleration distance is calculated in the Elevator Solution Software from the activated speed. If the speed signal is deactivated Pr **20.13** = 4 mode) or a stop input signal is activated (Pr **20.13** = 1...3 modes) the calculated deceleration distance will be controlled independent of the load level.

At higher travel speeds the actual position at which the car will stop is highly dependent on the time when deceleration begins. For example, if the I/O read cycle time of the drive inputs is 1 ms, and if the cycle time of the elevator controller is 1ms the position accuracy is:

Accuracy [mm] = $V_{Nominal}$ [mm/s] x 2 ms

Because of this, the direct-to-floor positioning is limited to approximately 1 m/s. At higher speeds, additional distance control for accurate stopping can be used, this being floor sensor correction which when implemented controls the final distance moved.

Figure 4-4 Velocity profile with direct-to-floor positioning

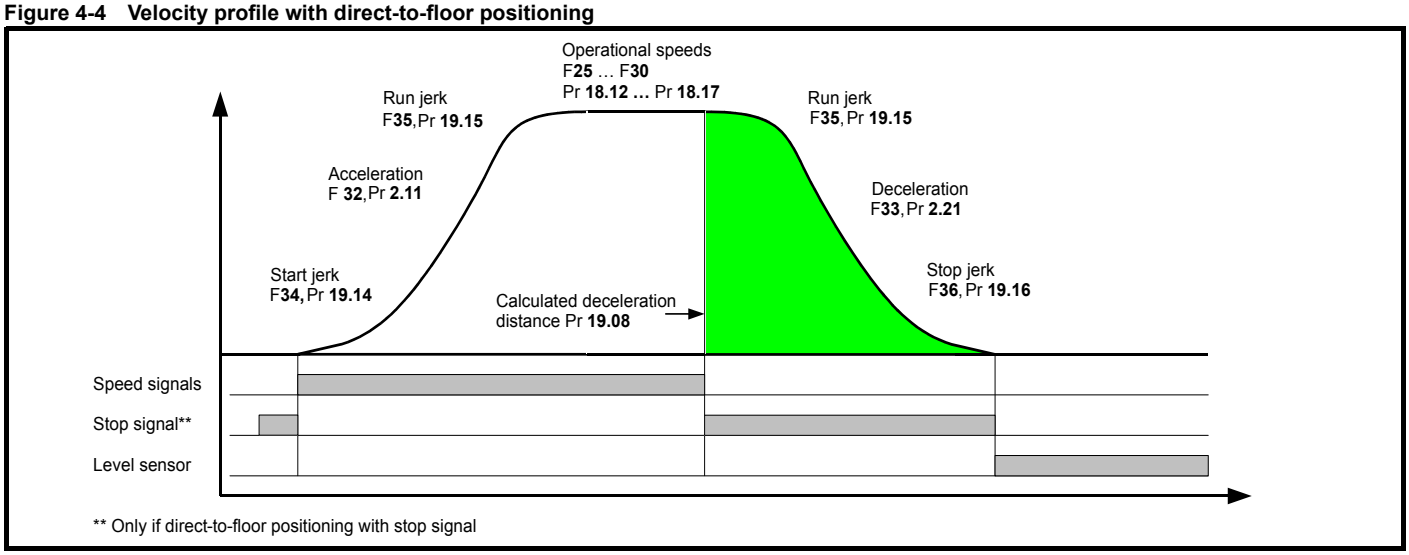

Figure 4-5 Direct-to-floor

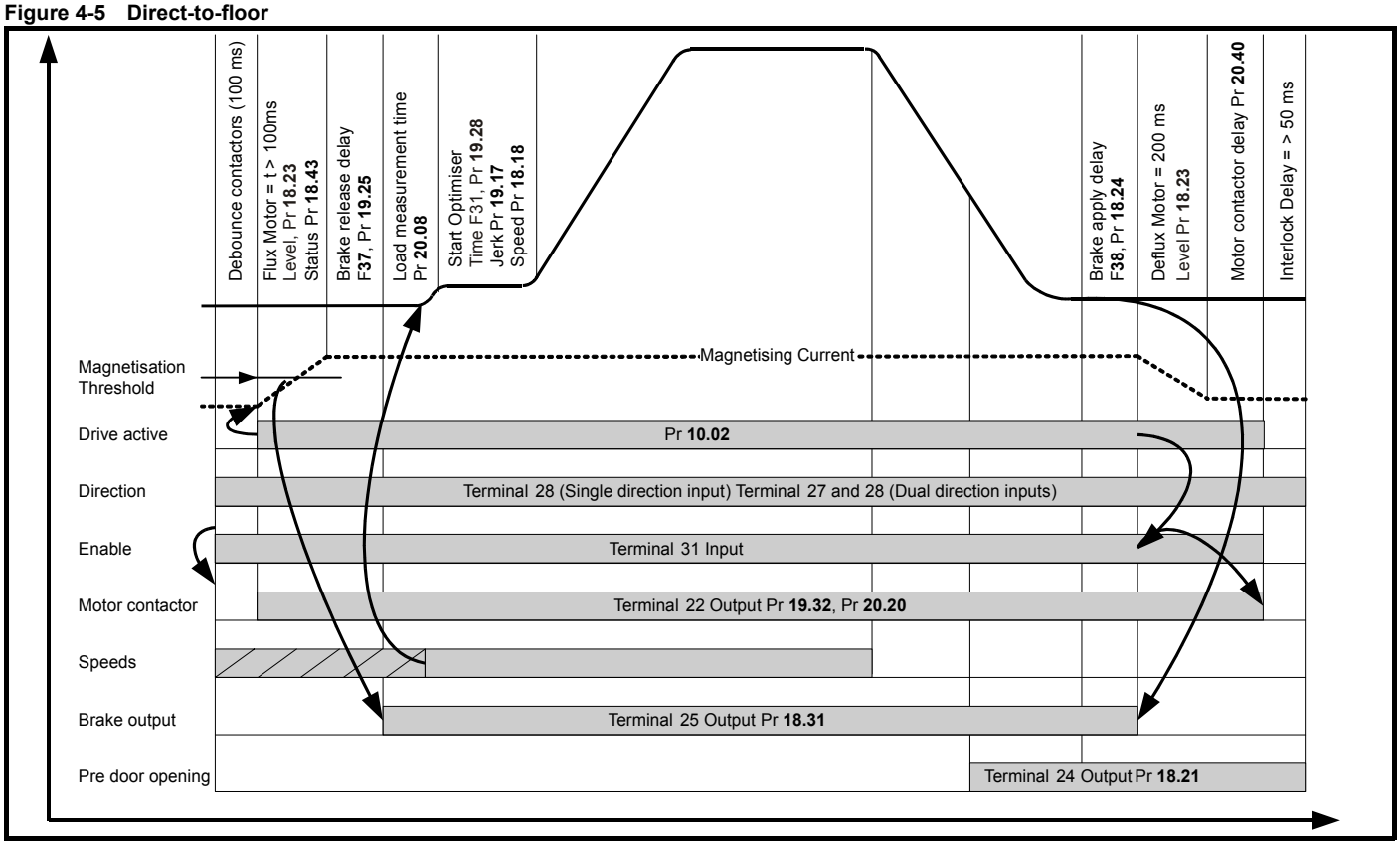

NOTE

Pr **18.23** is used to adjust the magnetization current threshold level for both open loop and closed loop vector operation.

For servo operation Pr **18.23** the magnetization current threshold is not required. This parameter in servo mode is therefore used to define the time taken to deflux the motor and reduce the current limits in Pr **4.05** and Pr **4.06**.

4.6 Start optimization

For geared and gearless elevator applications operating in either creep-to-floor or direct-to-floor, the velocity profile during the start can be optimized where required using the additional features available in the Elevator Solution Software.

Feature	Details
Start locking	The start locking is available for closed loop applications and is used in addition to the variable speed loop gains for the start. The start locking feature is mainly used for gearless applications.
Start optimizer	The start optimizer is available for both open and closed loop operation in either geared or gearless applications. Optimized speed loop gains should be set-up prior to applying the Start optimizer for closed loop applications.
Variable stator resistance	The variable stator resistance control is available for open loop applications and provides improved performance with increased levels of starting torque.

For closed loop operation these features are used in addition to the speed loop gains which alone will also prevent rollback and provide higher levels of ride comfort.

NOTE

For adjustment of the start speed loop gains refer to Pr **18.27** and Pr **18.28**.

4.6.1 Start locking, brake release

For both gearless and geared elevator applications, a position controller is available in the Elevator Solution Software for the start sequence. This can be optimized to prevent roll back of the motor following brake opening. The start locking will attempt to hold the elevator car in position following the drive enable and during opening of the brake. Once the brake is opened and the profile is started the Start locking is then disabled. If "STOP" is displayed, the position controller does not operate as no speed is selected and the motors brake is applied.

The start locking feature in the Elevator Solution Software consists of both a proportional Kp and derivative Kd term. The start locking feature is independent of the start speed loop gains and may be required where increased start gains are not achievable due to instability associated with low resolution speed feedback devices.

The maximum values for the start locking Kp and Kd gains will be limited by the stiffness of the start speed loop gains. The start speed loop gains being **F43**, Pr **18.27** and **F44**, Pr **18.28** maximum level will be determined by the speed feedback device used, [SinCos encoders being far superior (higher resolution) to standard incremental encoders or resolvers (lower resolution)]. The speed loop Ki integral gain Pr **18.28** determines the holding torque at zero speed and therefore minimizes movement during brake opening.

Under normal operating circumstances the variable speed loop gains alone should be sufficient to hold the motor at zero speed and prevent rollback during opening of the brake. It is therefore essential that the start speed loop gains are firstly optimized for the application before adjustment of the start locking.

Table 4-5 Start locking parameters

Parameter	Details
Pr **18.27**	Speed loop proportional gain. Increase to provide a smooth acceleration, excessive values will result in instability during acceleration, low values will result in damped acceleration.
Pr **18.28**	Speed loop integral gain. Increase value to prevent roll back during brake release. The maximum limit for the gain will be defined by current instability, acoustic noise and vibration on brake release.
Pr **19.12**	Start locking proportional gain. Setting the Kp proportional gain to > 0 results in the elevator car being held into position during opening of the brake. The maximum detectable position error is determined by the level of Kp proportional gain. The recommended settings for the Kp proportional gain are from 3 up to 30.
Pr **19.20**	Start locking derivative gain. The Kd derivative gain counteracts a detectable quick change of position, this helps the Kp proportional gain by introducing a lower level of compensation with slight deviations. Recommended settings for the Kd derivative gain are from 10 up to 100.

To disable the start locking both the Kp proportional gain **F47**, Pr **19.20** and Kd derivative gain Pr **19.12** should be set = 0.

Figure 4-6 Start locking

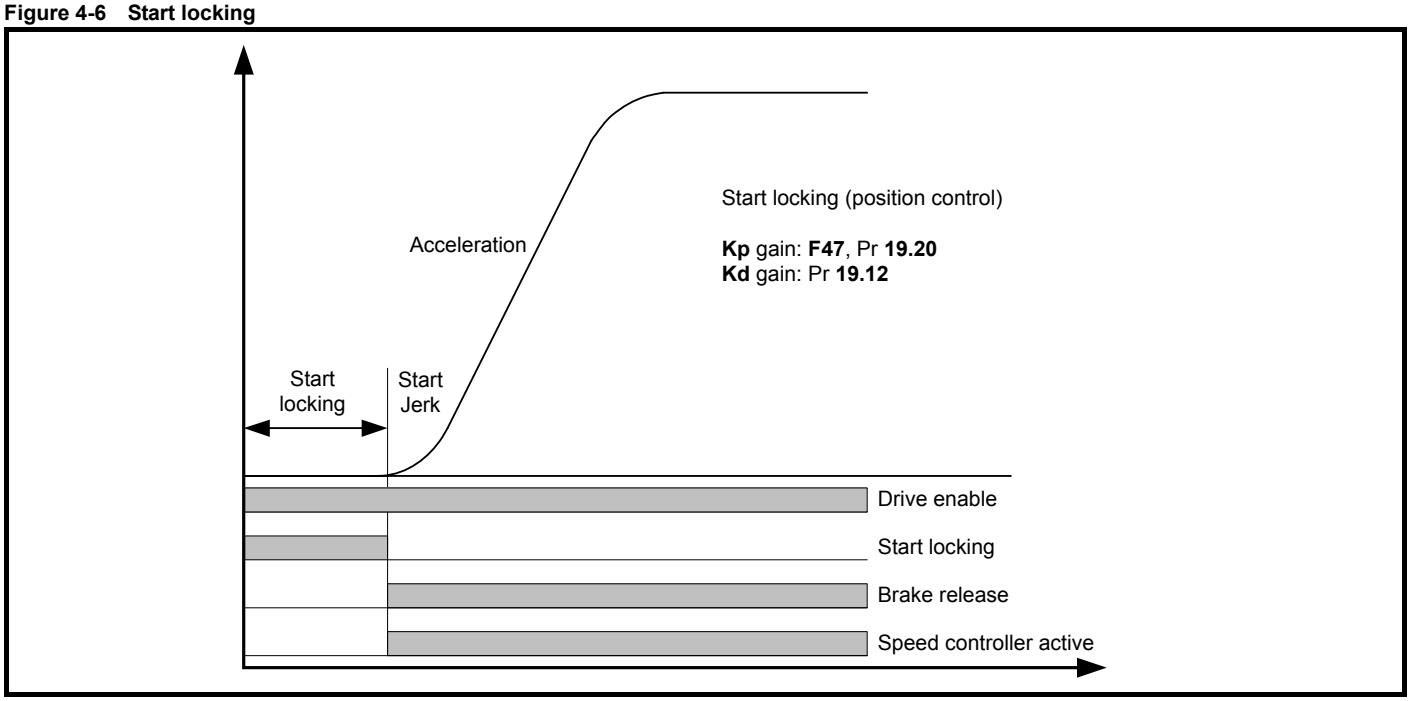

4.6.2 Start optimizer, open and closed loop operation

The start optimizer feature can be enabled to overcome starting difficulties arising from static friction or mechanical imperfections with the elevator system. This feature would typically be enabled for open loop applications, geared applications and applications with imperfections resulting in reduced start ride level quality. For closed loop gearless applications, the start optimizer is not required as correct optimization of the start speed loop gains provide the required compensation.

The start optimizer has a jerk, speed and time setting as shown below which can be adjusted to achieve the required ride comfort during the start. The start optimizer is disabled at default with software versions > V01.22.00 to enable this the time for the start optimizer **F31**, Pr **19.28** should be > 0. Once the start optimizer is enabled the start optimizer jerk Pr **19.17** is used for the time defined in **F31**, Pr **19.28** at the speed set in Pr **18.18**. On completion of the start optimization defined by the time **F31**, Pr **19.28**, the elevator will continue a transition to the normal acceleration profile using the standard start jerk in **F34**, Pr **19.14**.

If the target speed for the start optimizer set in Pr **18.18** is not reached during the start optimizer time defined in **F31**, Pr **19.28** there will be a continuous transition to the normal acceleration profile.

Table 4-6 Start optimizer parameters

Parameter	Details
Pr **18.18**	Start optimizer speed in mm/s, default setting = 10, recommended range 5 to 15
Pr **19.17**	Start optimizer jerk mm/s^3, default setting = 10, recommended range 10 to 20. Value selected must be less than the start jerk in F**34**, Pr **19.14**.
F**31** Pr **19.28**	Start optimizer time in ms, default setting = 0 start optimizer disabled. To enable start optimizer value should be > 0, recommended range 500 to 800 ms.

Figure 4-7 Start optimization

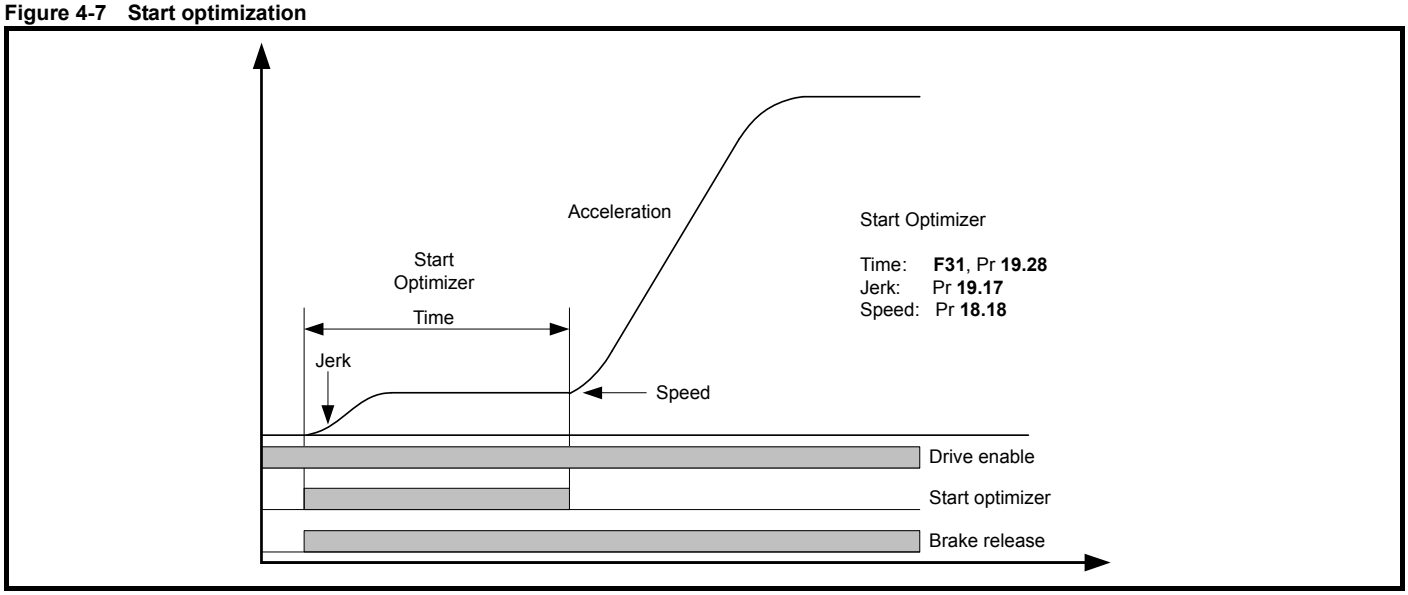

4.6.3 Brake load compensation

Automatic compensation for brake loading applied during stopping sequence is active from V01.23.00 Elevator Solution Software. The brake load compensation is enabled with Pr **71.62,** and carries out automatic compensation during the next start using the value of the load present during the previous stop, displayed in Pr **71.63** in 0.01 % units.

4.6.4 Variable stator resistance control, open loop operation

For open loop operation there is a variable stator resistance control function provided which allows the autotune stator resistance value for the motor to be modified. The autotune value for the stator resistance is modified (increased in Pr **5.17**) to provide increased levels of torque at the initial start with the value then being ramped down to the end value Pr **21.12** which is the autotune value for the motors stator resistance. The following parameters are used for this control.

Table 4-7 Variable stator resistance

Parameter	Details
Pr **5.17**	Stator resistance start value, user adjusted from autotune
Pr **18.48**	Enable variable stator resistance control
Pr **19.11**	Transition time between start and end stator resistance values
Pr **21.12**	Stator resistance end value derived from autotune

The variable stator resistance control function is enabled with Pr **18.48** = On (1), both Pr **5.17** and Pr **21.12** = 0 at default.

For the variable stator resistance control function to operate correctly, an autotune is required to measure the actual value of the motors stator resistance. The stationary autotune Pr **5.12** = 1 is sufficient to measure the stator resistance and set-up both Pr **5.17** and Pr **21.12**. Once the autotune has been completed Pr **5.17** and Pr **21.12** are set-up with the measured value of the motor's stator resistance. Pr **5.17** can be optimized to provide increased levels of starting torque. Pr **21.12** should remain at the autotune value for the motors stator resistance. The actual value used for the motor stator resistance between the start and end values can be viewed during operation in Pr **5.17**.

The ramp from the start value in Pr **5.17** to the end value in Pr **21.12** begins when a speed reference is applied. The ramp time between the start value in Pr **5.17** and the end value in Pr **21.12** is determined by the transition time in Pr **19.11** in ms. On completion of the travel and removal of the drive enable, Pr **5.17** is reset to the user defined optimized start value for the next travel.

Figure 4-8 Variable stator resistance control

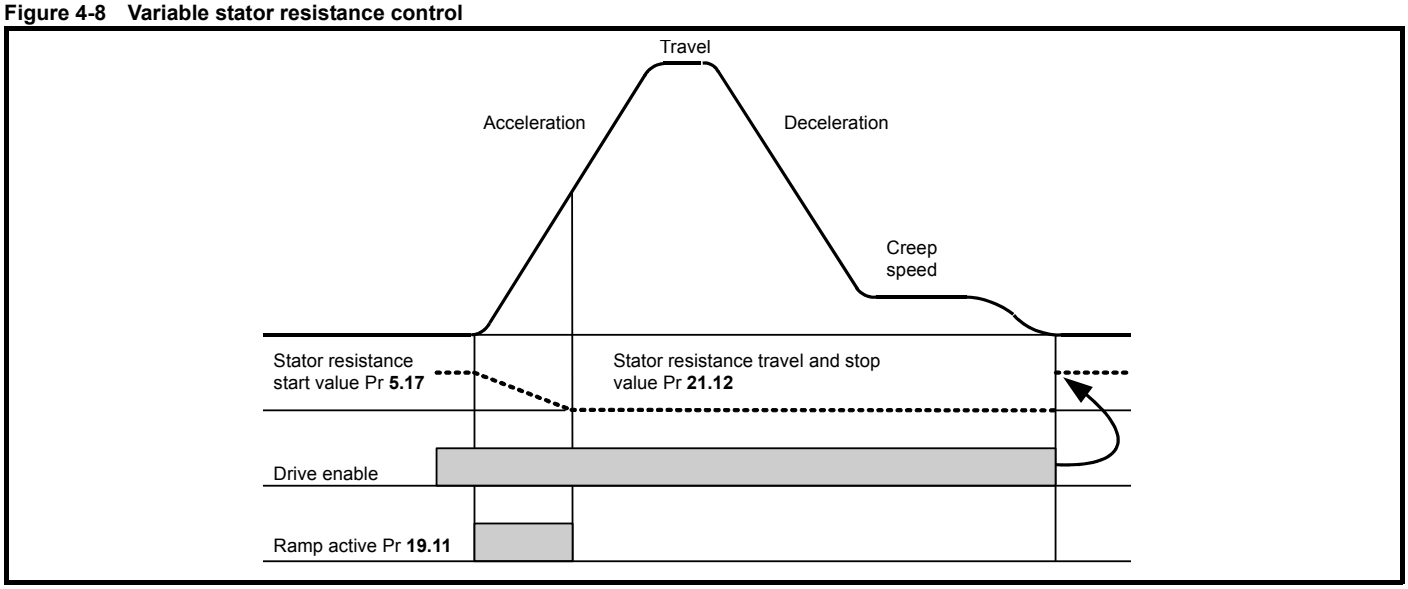

4.7 Floor sensor correction

Independent of the positioning profile selected (direct-to-floor or creep-to-floor), additional floor sensor correction can be implemented when operating in closed loop mode. This feature provides improved accuracy for the final positioning at the floor target position. The floor sensor correction is not available in open loop mode. When operating in open loop mode a standard deceleration with the programmed ramp is carried out.

Floor sensor correction allows:

- Rope slip to be compensated (as long as the normal stopping distance is short without the additional compensation provided by the direct-to-floor positioning mode).
- High levels of floor target position accuracy with elevator speeds in excess of 1m/s
- Quasi direct-to-floor positioning can be achieved if an additional sensor is detected before positioning at creep speed, creep-to-floor positioning mode (Pr **20.14** = 1, 2, 3). Creep speed is disabled when Pr **20.14** = 4.

The floor sensor correction requires a sensor that can be detected in the range of 50 to 500 mm before the flush or level with floor target position. Floor sensor correction can be implemented if the sensor can be detected during deceleration or creep speed with creep-to-floor positioning.

NOTE

Floor sensor correction should be used with direct-to-floor positioning control on elevators with speeds in excess of 1 m/s. This ensures maximum accuracy.

Table 4-8 Floor sensor correction parameters

Parameter	Description
Pr **18.09**	Remaining floor sensor correction distance
Pr **18.19**	Floor sensor correction target distance
Pr **19.09**	Speed at floor sensor correction active
Pr **20.05**	Time from floor sensor correction active to stop
Pr **20.14**	Floor sensor correction input _ drive control terminal

Pr **20.14** = 4 Floor sensor correction is enabled when the creep speed is disabled and uses Pr **18.19** floor sensor target distance.

The source for the floor sensor correction must be set-up in the Elevator Solution Software in Pr **20.14** as shown in Table 4-9.

Table 4-9 Floor sensor correction source

Floor sensor correction source	Parameter	Notes
Disabled	Pr **20.14** = 0	No floor sensor correction
Analog input 1	Pr **20.14** = 1	Floor sensor correction active using floor sensor connected to the drive analog input
Analog input 2	Pr **20.14** = 2	
Analog input 3	Pr **20.14** = 3	
Distance controlled stopping distance	Pr **20.14** = 4	Distance controlled using programmed deceleration ramps and jerk

Table 4-10 Floor sensor correction distance parameters

Parameter	Distance controlled creep speed	Direct-to-floor
Pr **18.09**	Remaining floor sensor distance	
Pr **20.05**	Time from floor sensor active	
Pr **19.09**	N/A	Speed at floor sensor correction activation mm/s
Pr **19.05**	Stopping distance in mm V_1 to V_0	Stopping distance in mm
Pr **19.08**	Calculated deceleration distance in mm V_{SET} to V_1	Calculated deceleration distance in mm V_{SET} to V_0
Pr **19.10**	Measured deceleration distance in mm V_{SET} to V_1	Measured deceleration distance in mm V_{SET} to V_0

4.7.1 Deceleration and stopping distance calculation

If the speed or profile parameters are changed both the deceleration and stopping distances will also change. The elevator controller can compensate for these changes by recalculating the final deceleration to achieve the floor sensor correction distance through a “learn” if this is possible. To change the parameters in the elevator controller correctly, the Elevator Solution Software calculates the deceleration and stop distances and displays them as shown in Table 4-10.

The Elevator Solution Software calculates the deceleration distance Pr **19.08** for the travel based upon the speed selected. On removal of the speed selection for deceleration and stop the measured deceleration distance Pr **19.10** begins to increment to the calculated deceleration distance in Pr **19.08**.

To reach the target distance, profile parameters are limited for deceleration to 2 x **F33**, Pr **2.21** and the stop jerk to a maximum value of **F36**, Pr **19.16**. If the stop distance is too low or the floor sensor signal was given at too high a speed the elevator may not be able to stop smoothly and therefore a hard stop will be implemented.

The floor sensor correction uses the floor sensor target distance defined by the user in Pr **18.19** (distance from floor sensor correction sensor to floor level). This target distance is controlled independent of the load. The point at which the floor sensor correction signal becomes active is between 50 and 500 mm before the floor level. Settings above 500 mm will reduce the accuracy at the floor level.

Once the floor sensor correction signal becomes active, the remaining floor sensor distance Pr **18.09** begins to decrease from the target distance Pr **18.19** to 0, which is the floor level. The remaining distance to the floor sensor from the point when the floor sensor correction input became active is continuously displayed in Pr **18.09** along with the speed in Pr **19.09**. The time from the point where the floor sensor correction input became active to the stop is also displayed in Pr **20.05**.

On completion the remaining floor sensor correction distance Pr **18.09** = 0 (±1) and the reference selector **F50**, Pr **18.10** = 1810 indicating the floor sensor correction has completed and that no reference is now selected.

NOTE

If the floor sensor correction enable Pr **19.42** = 0 all values for the floor sensors can be used to check correct operation. All measured values which are required for the floor sensor correction for example the deceleration distance, time from the floor sensor and the speed at floor sensor correction are displayed and can be checked prior to the floor sensor correction being enabled.

4.7.2 Floor sensor correction, direct-to-floor, analog input

Conditions 1, 2, or 3: Pr **20.14** = 1, 2 or 3

When the floor sensor correction signal is activated, the floor sensor target distance is controlled independent of load. Because of direct deceleration from a higher speed, the real time demand on the control system is high, and dependent upon the parameter settings and I/O speed. For example, if the cycle time of the elevator controller is 1 ms, and the drive inputs are also 1 ms the position accuracy is:

$$\textbf{Accuracy [mm]} = V_{\text{speed at floor sensor active, Pr 0.22 [mm/s]}} \times 2\ \text{ms}$$

It should be noted that the floor sensor correction signal should be activated instantaneously at that position which is Pr **18.19** floor sensor target distance away from the floor sensor in mm. The stop signal can be used for all speeds.

Figure 4-9 Floor sensor correction, direct-to-floor

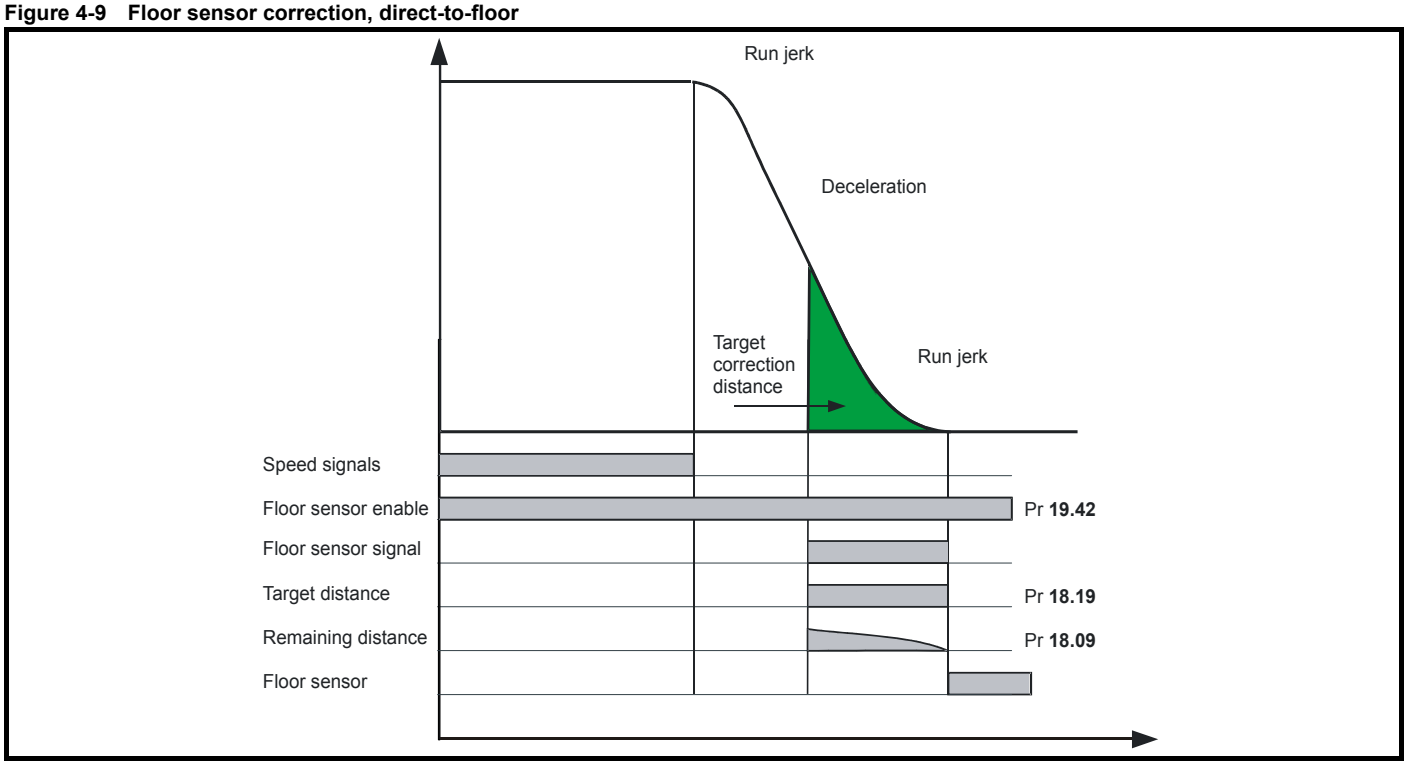

NOTE

If the stop distance is too low, or the floor sensor signal given at too high a speed, it is possible that the elevator may not stop smoothly and a hard stop will occur.

4.7.3 Floor sensor correction, distance controlled creep speed

Condition 4: Pr **20.14** = 4

When Pr **20.14** = 4 distance controlled creep speed is selected and the floor sensor correction is activated during the creep speed.

Figure 4-10 Floor sensor correction, distance controlled creep speed

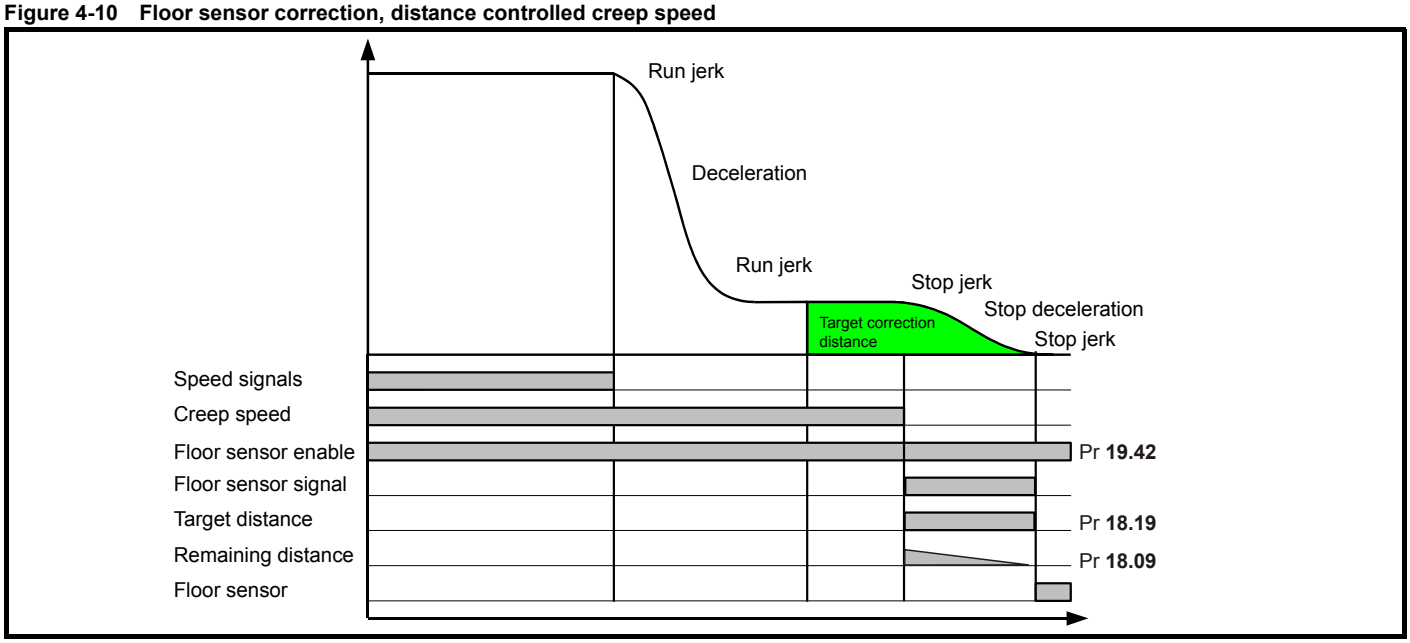

If the creep speed signal is deactivated, the controlled stopping distance in Pr **18.19** will be active. The relevant profile parameters are Pr **19.13** deceleration, and **F36** Pr **19.16** stop jerk (creep-to-floor). In this case, because the deceleration is from creep speed, the real time demand to the elevator controller is low. For example if the cycle time of the elevator controller is 10 ms and the elevator drive 1 ms, the accuracy can be calculated and the stop accuracy would be:

Accuracy [mm] $\geq$ $\mathbf{v_{creep\ speed}}$ **[mm/s] x 11 ms**

The profile parameters and the creep speed settings are used for calculating distances. At the default settings, the creep speed in **F24**, Pr **18.11** is used. This assignment can be changed through Pr **20.12** creep speed parameter.

NOTE

If the stop distance is too low or the floor sensor signal given at too high a speed, it is possible that the elevator may not stop smoothly and a hard stop will occur.

NOTE

The creep speed signal can be deactivated at any time after the floor sensor correction signal is activated. If the creep speed signal is still active at standstill, the motor will accelerate to creep speed on completion of the floor sensor correction.

4.8 Peak curve operation

Peak curve operation overview (V01.23.00 onwards)

Peak curve operation guarantees a constant stopping distance independent of the moment when the signal to stop occurs, for different elevator floor level distances. Peak curve operation allows the use of a single speed for different floor level distances with a modified maximum speed control where the demanded speed cannot be achieved due to the reduced floor level. The modified maximum speed is controlled for peak curve operation to avoid operating for extended periods at low speed and therefore reduces travel times for systems with different floor level distances.

Peak curve operation modifies the maximum operating speed based upon when the signal to stop occurs ensuring that the required stopping distance is always achieved and the floor level is reached with the programmed jerks and deceleration rate. Peak curve operation is available for both creep-to-floor and direct-to-floor modes of operation. Peak curve operation can be enabled and used along with floor sensor correction control.

Table 4-11 shows the peak curve mode configuration for both creep-to-floor and direct-to-floor operation.

Table 4-11 Peak curve operating modes

Peak curve operation mode	Setting
Creep-to-floor, standard peak curve operation	Creep-to-floor, enable Pr **18.47** = 1 Deceleration distances derived from normal deceleration determined by speed and profile settings
Creep-to-floor, comfort peak curve operation	Creep-to-floor, enable Pr **71.54** = 1 (Pr **18.47** not active). Deceleration distances derived from deceleration determined by speed and profile settings extended by acceleration reduction distance.
Direct-to-floor, peak curve operation	Direct-to-floor, enable Pr **20.13** = 1, 2, 3, 4 Stopping distances derived from normal stop determined by speed and profile settings
Direct-to-floor, user distance peak curve operation	Direct-to-floor, enable Pr **20.13** = 5 and stopping distances Pr **71.81** through to Pr **71.87** selected when > 0 using actual speeds V1 to V7.
Flat top control peak curve operation	Flat top control enabled when flat top distance time Pr **71.61** > 0 and Pr **18.47** = 1 Standard peak curve operation Pr **71.54** = 1 Comfort peak curve operation Pr **20.13** = 1, 2, 3, 4, 5 Direct-to-floor operation

NOTE

The highest priority is direct-to-floor operation, next is comfort peak curve following standard peak curve operation.

NOTE

For peak curve operation the standard run jerk Pr **19.15** is active. However the jerk for end of acceleration (Pr **19.15)** can also be replaced with Pr **20.36** end of acceleration jerk, which is enabled with Pr **19.47** if required.

NOTE

The profile parameters for peak curve operation have to be modified once the signal to stop arrives during the acceleration decrease. This ensures the measured peak curve distance and stopping distance are achieved and the target floor level reached.

4.8.1 Creep-to-floor, standard peak curve operation and direct-to-floor peak curve operation

The peak curve operating speed before and after speed limitation is used as the calculation base for the controlled stopping distance. The set-point peak curve distance is calculated from the profile parameters and displayed in Pr **19.06**. This deceleration distance value is for the applied speed. The deceleration distance is measured during peak curve operation and displayed in Pr **19.07**.

Table 4-12 Standard peak curve operation parameters

Parameter	Description
Pr **2.21**	Deceleration rate
Pr **18.47,** Pr **20.13**	Standard peak curve mode enable Pr **18.47** = 1, Pr **20.13** = 1, 2, 3 or 4
Pr **19.05**	Stop distance from creep speed **V1** to zero speed **V0** using stop jerk Pr **19.16**. Stop distance direct-to-floor from speed **Vx** to zero speed **V0** using stop jerk Pr **19.16**
Pr **19.06**	Set point peak curve distance, the distance used for peak curve operation before the controlled stopping distance (Pr **19.05**). The set point peak curve distance is calculated from the profile parameters.
Pr **19.07**	Measured peak curve distance: The measured distance during peak curve operation (braking distance) before the controlled stopping distance (Pr **19.05**). This value is the deceleration distance for the applied speed.
Pr **19.08**	Calculated deceleration distance: The deceleration distance based upon the speed and the profile setting is calculated and displayed in Pr **19.08**.
Pr **19.10**	Measured deceleration distance, displayed after every travel
Pr **19.15**	Run jerk

The final performance of the elevator with peak curve operation enabled will be dependant upon the speed at the point when the signal to stop occurs, as a result of this three different results can occur:

1. If the final demanded speed is achieved prior to the signal to stop occurring there is no influence on the speed profile and the normal deceleration to stop is implemented. This is the operation for a normal floor travel.
2. If there is increasing or constant acceleration when the signal to stop occurs (final demanded speed not achieved) peak curve operation will limit the maximum operating speed to achieve the measured peak curve distance and stopping distance. Therefore following the signal to stop the speed demand is limited, the profile parameters (jerk and acceleration) are automatically adjusted, and braking is carried out followed by deceleration to stop in the calculated peak curve operation distance.
3. If the signal to stop occurs as the acceleration decreases, the profile parameters (jerk and acceleration) are automatically adjusted to ensure the measured peak curve distance and stopping distance are achieved and the target floor level reached. This can in some cases result in increased jerk and acceleration which in turn can affect the ride quality.

Figure 4-11 Standard peak curve operation

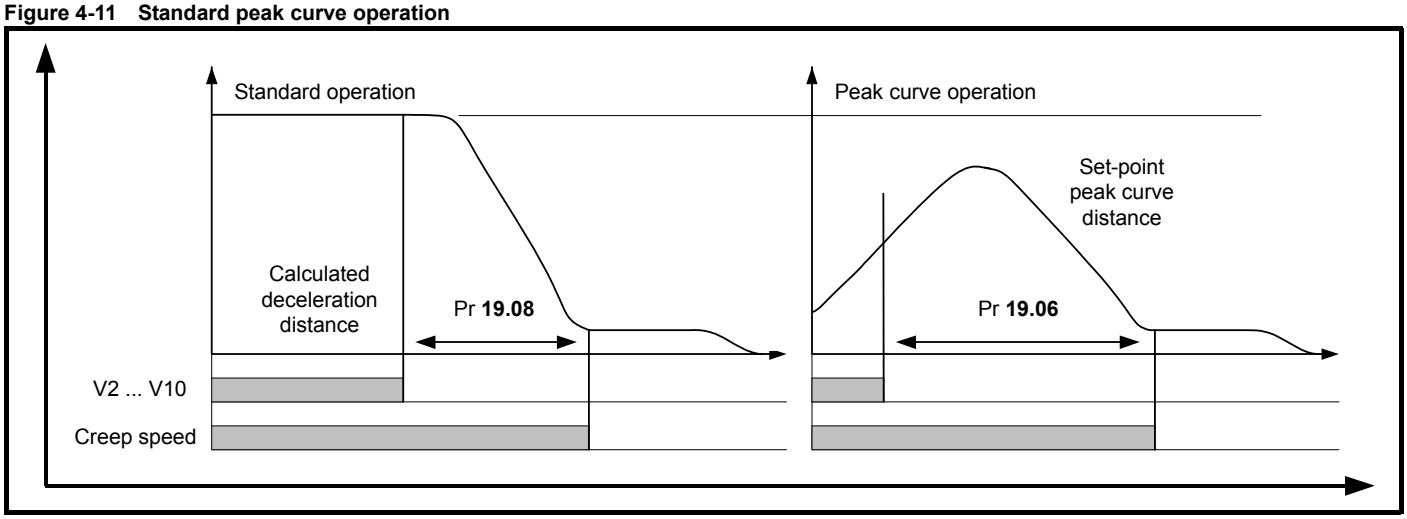

Figure 4-12 Standard peak curve operation timing

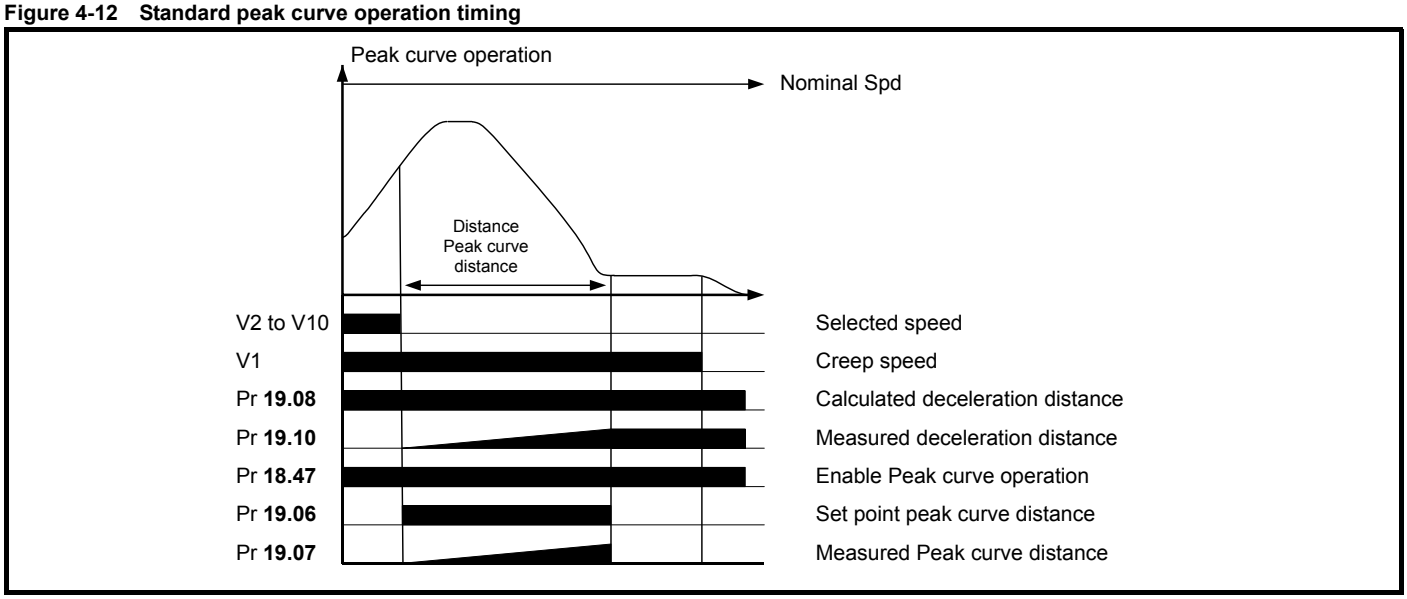

4.8.2 Creep-to-floor, comfort peak curve operation

If the travel command is removed during the reduction of the acceleration when approaching nominal speed with standard peak curve operation, the profile parameters acceleration and jerk have to be automatically adjusted to prevent overshooting the floor. This in turn could lead to excessive jerk and acceleration resulting in reduced ride quality. To avoid this adjustment of the profile parameters, the Elevator Solution Software includes the comfort peak curve operation.

The comfort peak curve operation is selected through Pr **71.54** = 1 (Pr **18.47** creep-to-floor enable is not used for this mode of peak curve operation). In this mode the calculated deceleration distance will be increased by the amount of distance from decreasing the acceleration to reaching constant speed.

The total deceleration consists of two parts, the first part is the delay of the deceleration by the time needed to travel the distance from decreasing deceleration to constant speed with the actual given speed, the second part is equal to the normal deceleration distance. The travel optimization is identical to the standard peak curve operation where it will accelerate further, if the creep speed / stop is applied and the reduction of the acceleration starts so that the total distance is equal to the extended deceleration. This will ensure that the distance will be travelled in the shortest time with the given profile parameters.

If the creep speed / stop is applied at the end of the acceleration the adjustment of the profile parameters are not needed. The lift will approach the target floor without changing the profile parameters.

This operation mode ensures the measured peak curve distance and stopping distance are achieved for the floor level and the target floor level is reached. The comfort peak curve control uses Pr **71.54** which is available using either CTSoft or the SM-Keypad Plus.

Table 4-13 Comfort peak curve operation

Parameter	Description
Pr **2.21**	Deceleration rate.
Pr **19.05**	Displays stop distance from creep speed **V1** to zero speed **V0** using stop jerk Pr **19.16**. Stop distance direct-to-floor from speed **Vx** to zero speed **V0** using stop jerk Pr **19.16.**
Pr **19.06**	Set point peak curve distance, the distance used for peak curve operation before the controlled stopping distance (Pr **19.05**). The set point peak curve distance is calculated from the profile parameters.
Pr **19.07**	Measured peak curve distance, the measured distance during peak curve operation (braking distance) before the controlled stopping distance (Pr **19.05**). This value is the deceleration distance for the applied speed.
Pr **19.10**	Measured deceleration distance, displayed after every travel.
Pr **19.15**	Run jerk.
Pr **71.54**	Comfort peak curve operation select.
Pr **71.61**	Flat top distance time in ms.

Figure 4-13 Comfort peak curve operation

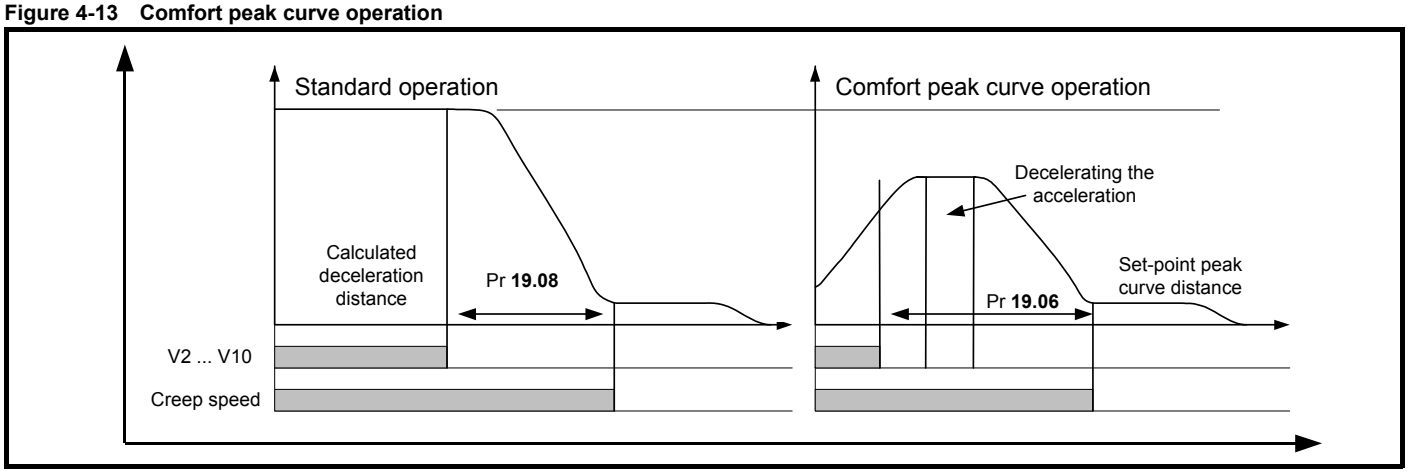

Figure 4-14 Comfort peak curve timing

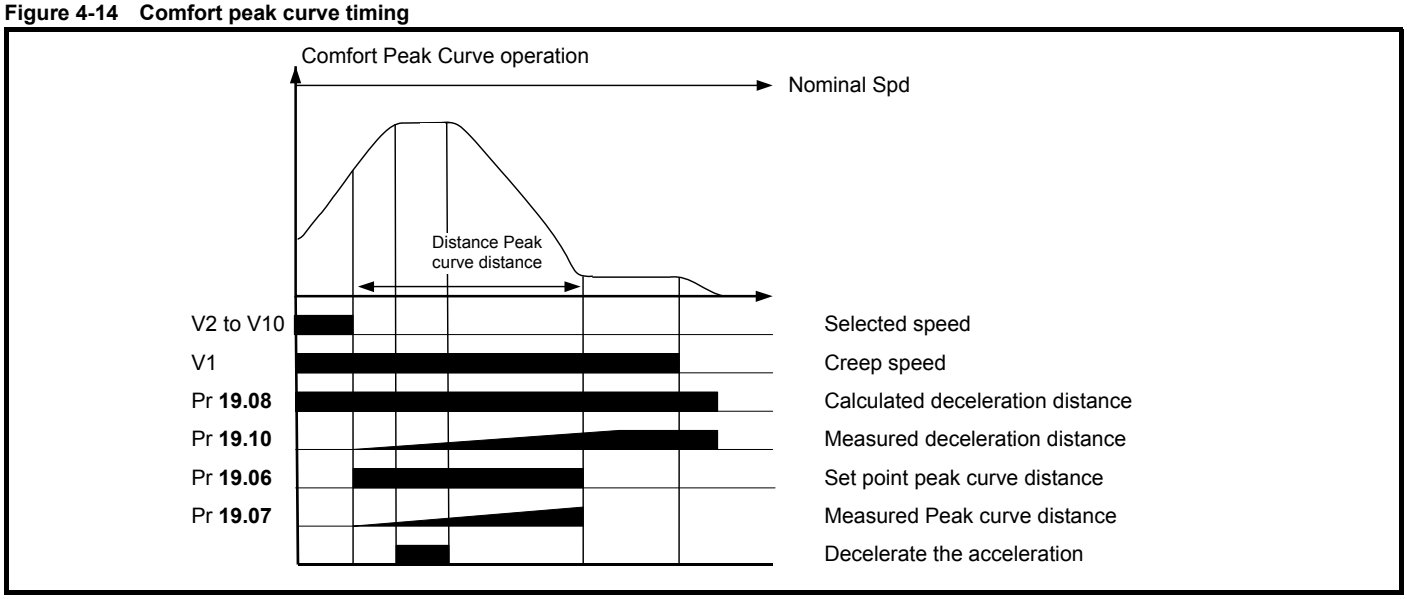

4.8.3 Direct-to-floor, user distance peak curve operation

To provide user defined adjustment of the profile parameters (deceleration distances) peak curve operation with user defined distance control is available. For operation here the user defined deceleration distances are set-up for each of the speeds V1 through to V7.

Table 4-14 User defined distances

Speed	User deceleration distance
V1, Pr **18.11**	Distance V1, Pr **71.81**
V2, Pr **18.12**	Distance V2, Pr **71.82**
V3, Pr **18.13**	Distance V3, Pr **71.83**
V4, Pr **18.14**	Distance V4, Pr **71.84**
V5, Pr **18.15**	Distance V5, Pr **71.85**
V6, Pr **18.16**	Distance V6, Pr **71.86**
V7, Pr **18.17**	Distance V7, Pr **71.87**

Each of the deceleration distances is selected separately based upon which speed is selected at the point where the stop is received. The peak curve with user defined distance control is enabled with Pr **20.13** = 5 and the required deceleration distances configured.

This operation mode also ensures the measured peak curve distance and stopping distance are achieved and the target floor level reached. The peak curve with user defined distance control uses Pr **71.81** through to Pr **71.87** which are available using either CTSoft or the SM-Keypad Plus.

Table 4-15 Peak curve operation user distance control parameters

Parameter	Description
Pr **2.21**	Deceleration rate.
Pr **20.13**	Flat top peak curve operation Pr **20.13** = 5.
Pr **19.05**	Displays stop distance from creep speed **V1** to zero speed **V0** using stop jerk Pr **19.16**. Stop distance direct-to-floor from speed **Vx** to zero speed **V0** using stop jerk Pr **19.16**.
Pr **19.06**	Set point peak curve distance, the distance used for peak curve operation before the controlled stopping distance (Pr **19.05**). The set point peak curve distance is calculated from the profile parameters.
Pr **19.07**	Measured peak curve distance, the measured distance during peak curve operation (braking distance) before the controlled stopping distance (Pr **19.05**). This value is the deceleration distance for the applied speed.
Pr **19.08**	Calculated deceleration distance, the deceleration distance based upon the speed and the profile setting is calculated and displayed in Pr **19.08**.
Pr **19.10**	Measured deceleration distance, displayed after every travel.
Pr **19.15**	Run jerk.
Pr **71.81** to Pr **71.87**	User control distances for each of the seven speeds V1 to V7.

NOTE

Peak curve operation with user defined distance control functions in the same way as the standard peak curve operation only in this mode the different deceleration distances are selected for the different operating speed V1 through to V7.

4.8.4 Flat top control peak curve operation

Flat top control peak curve operation is enabled when a flat top distance time is set-up in Pr **71.61** > 0, and will operate in standard peak curve operation Pr **18.47** = 1, comfort peak curve operation Pr **71.54** = 1 and direct-to-floor operation Pr **20.13** = 1, 2, 3, 4, 5.

To prevent the adjustment of profile parameters (jerk and acceleration) it can be required to take into account the distance from decreasing the acceleration, to reaching constant speed for the deceleration distance. This will allow profile parameters to remain constant when the signal to stop arrives during the decrease of the acceleration. This also ensures the measured peak curve distance and stopping distance are achieved and the target floor level reached. Flat top peak curve operation is enabled with Pr **20.13** = 1, 2, 3 or 4 and Pr **71.61** > 0. The flat top peak curve operation uses the flat top time defined in Pr **71.61** with this parameter available using either CTSoft or the SM-Keypad Plus.

Table 4-16 Peak curve operation with flat top control parameters

Parameter	Description
Pr **2.21**	Deceleration rate
Pr **18.47,** Pr **20.13**	Flat top peak curve operation Pr **18.47** = 1, Pr **20.13** = 1,2,3, 4 or 5
Pr **19.05**	Displays stop distance from creep speed **V1** to zero speed **V0** using stop jerk Pr **19.16**. Stop distance direct-to-floor from speed **Vx** to zero speed **V0** using stop jerk Pr **19.16**
Pr **19.06**	Set point peak curve distance: The distance used for peak curve operation before the controlled stopping distance (Pr **19.05**). The set point peak curve distance is calculated from the profile parameters.
Pr **19.07**	Measured peak curve distance: The measured distance during peak curve operation (braking distance) before the controlled stopping distance (Pr **19.05**). This value is the deceleration distance for the applied speed.
Pr **19.08**	Calculated deceleration distance: The deceleration distance based upon the speed and the profile setting is calculated and displayed in Pr **19.08**.
Pr **19.10**	Measured deceleration distance: Displayed after every travel
Pr **19.15**	Run jerk
Pr **71.61**	Flat top peak curve operation Pr **71.61** > 0 defines the time for operation at constant speed

Figure 4-15 Peak curve operation flat top control

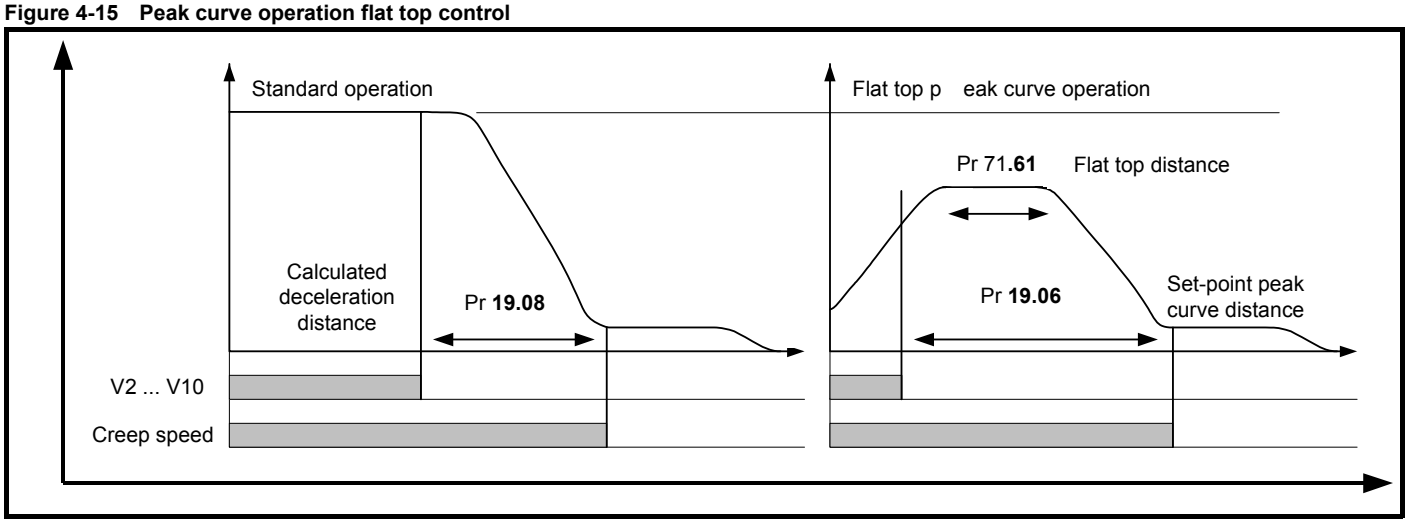

Figure 4-16 Peak curve operation with flat top timing control

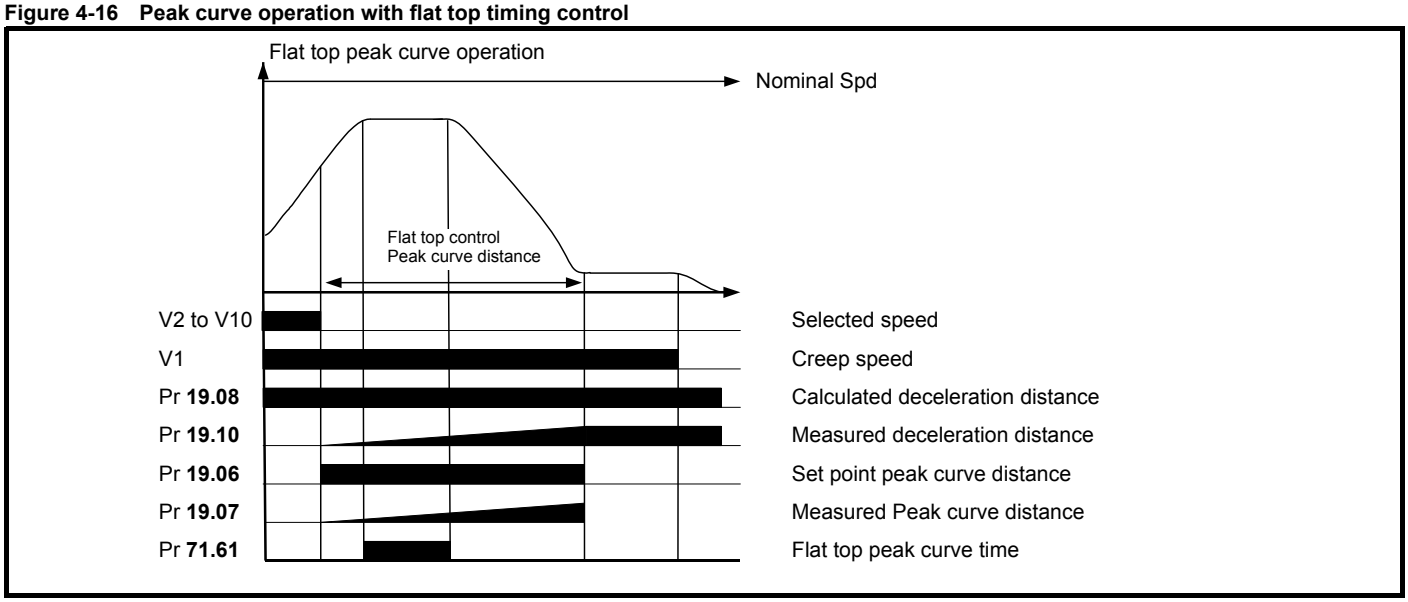

4.9 Short floor landing

Short floor landing has been created to allow operation with a short floor distance which is lower than the braking distance from the normal floor selected speed. In this case peak curve operation cannot be used where the short floor distance is less than 0.7 m for example. For these short floor distances, the Elevator Solution Software provides the short floor landing with real distance control.

The short floor landing distance is defined in Pr **18.20** (mm), this is the distance to the floor (door) zone as shown in Figure 4-17. The maximum operating speed is derived from both the short floor distance and the profile settings. Once the short floor landing distance has been reached the elevator will complete the travel operating at the selected creep speed to stop.

Short floor landing is selected using a digital input from the elevator controller routed to Pr **18.35** for operation with short floor less then 0.7 m for example. The control signals for the creep speed and short floor landing enable must be applied simultaneously. The speed operating speed is internally calculated so that the creep speed is reached after the short floor landing distance (Pr **18.20)** and when the floor (door) zone is reached.

Table 4-17 Short floor landing parameters

Parameter	Details
Pr **18.35**	Enable short floor landing, using a digital input from lift controller to drive routed directly to Pr **18.35** and synchronised with the drive enable.
Pr **18.20**	Short floor landing distance used for distance control during the short floor travel to the floor (door) zone.

NOTE

If the creep speed is removed during operation the elevator will stop with the set jerk and deceleration.

Figure 4-17 Short floor landing operation

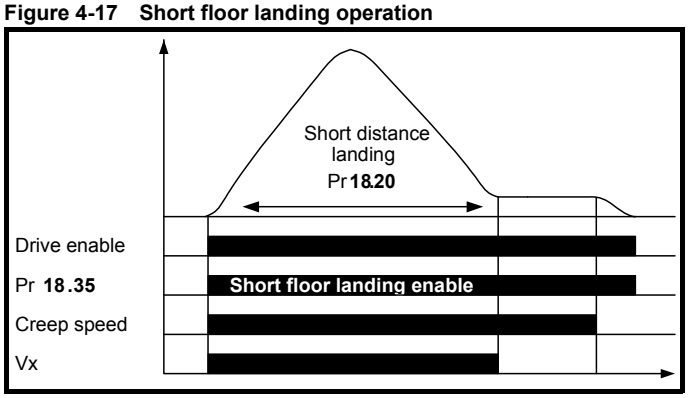

4.10 Fast stop

A fast stop is available for commissioning / start up and inspection of the elevator system. The fast stop allows the user to define a fast stop deceleration rate that is greater than the standard stop deceleration rate. The fast stop function has been introduced with Elevator Solution Software version 1.10 onwards and in default is disabled, to enable the fast stop set Pr **19.49** = On.

The fast stop feature allows:

- User defined fast stop deceleration rate
- Faster stopping available compared to the standard deceleration and jerk for commissioning / start up and inspection.
- Can be used to overcome hard stops due to standard deceleration and jerk during commissioning / start up and installation.

4.10.1 Speed selection

When the fast stop is enabled and a speed is selected of 0 mm/s for the deceleration, the deceleration rate in Pr **21.05** is active for the fast stop deceleration only (closed loop in m/s^2 /open loop in cm/s^2). The deceleration jerk **F36** Pr **19.16** is no longer used, and a fixed time of 200 ms is used in order to run as smoothly as possible from inspection speed to deceleration, and deceleration to stop.

4.10.2 Direction control

Direction control is active from software version V01.21.07 when a direction signal is removed (single or dual directions) a fast stop is carried out using the deceleration jerk of 200 ms and the deceleration rate defined in Pr **21.05**.

Table 4-18 Fast stop parameters

Function	Parameter	Detail
Enable fast stop	Pr **19.49**	Enables the fast stop function
Deceleration rate	Pr **21.05**	Fast stop deceleration rate active when Pr **19.49** = On and speed selected is 0 mm/s
Fast stop speed	**F26**, Pr **18.13**	Speed selected for fast stop must be zero

Figure 4-18 Fast stop

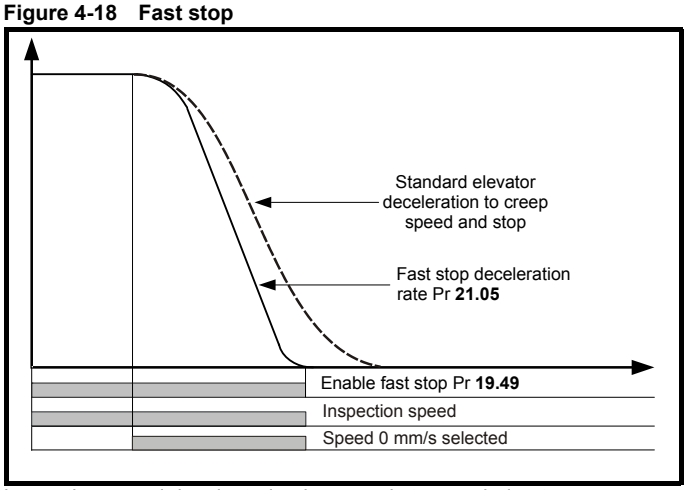

Inspection speed deselected only, normal stop carried out.
Inspection speed deselected and speed = 0 mm/s selected, fast stop carried out.

4.10.3 Fast stop during acceleration

With fast stop modes (a) Speed selection or (b) Direction control, no stop is implemented during acceleration where a stop may be requested, the speed will continue to increase to the nominal speed before a stop / deceleration is carried out. Fast stop during acceleration is available with Elevator Solution Software ≥ V01.22.22. When the speed signals are removed during acceleration, the acceleration will be set to 0 and the speed will not increase with the deceleration starting immediately. The Fast stop during acceleration is enabled with Pr **71.59** = 1, (Pr **19.49** the enable for the standard fast stop is not required for this mode).

The stop / deceleration carried out with the Fast stop during acceleration can follow the standard profile or Speed control / Direction control Fast stop.

4.11 Fast start function in closed loop operation

The fast start function reduces the elevator start time by magnetizing the motor and releasing the brake while the elevator car doors are closing. For standard operation the magnetization of the motor and brake release are only carried out once the elevator car doors are closed. The fast start is enabled with Pr **19.46** = On using an additional digital input.

The fast start enable, Pr **19.46** should follow the standard enable input on control terminal 31 from the elevator controller. On enable of the drive Pr **19.46** = On, and on disable of the drive Pr **19.46** = OFF.

Figure 4-19 Fast start

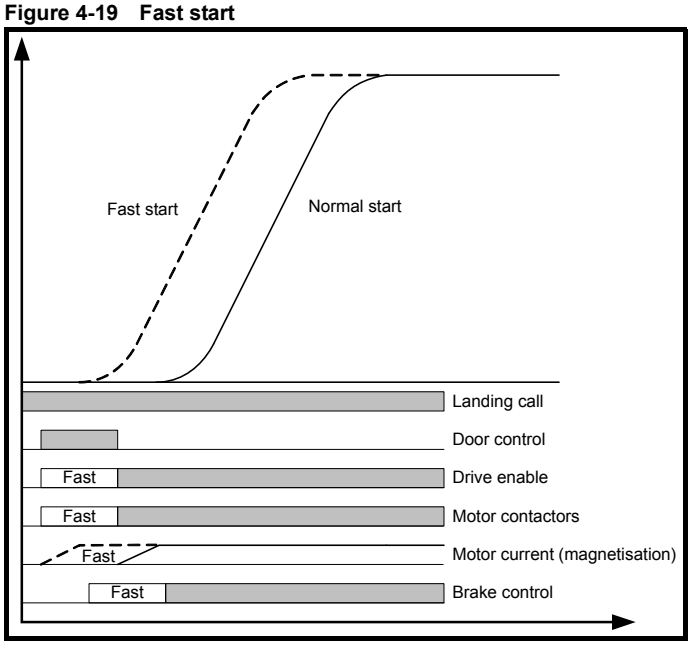

4.12 Nominal elevator rpm calculation

In order to set up the nominal elevator speed **F21** Pr **18.29** in the Elevator Solution Software there is an operational rpm configuration, which uses the roping, sheave diameter and gearing data entered into the following parameters. The nominal elevator speed rpm in **F21** Pr **18.29** is the final speed of the motor which must be set-up correctly to ensure the nominal elevator speed mm/s in **F19** Pr **18.30** is achieved.

The following parameters for the elevator need to be entered to allow the operational rpm configuration to calculate the nominal elevator rpm **F21** Pr **18.29.**

NOTE

Parameter **F20** Pr **19.31** the operational rpm configuration by default is set to On. This can be disabled if required to manually adjust the nominal elevator speed rpm in parameter **F21** Pr **18.29.**

Table 4-19 Nominal elevator parameters

Function	Parameter	Detail
Nominal elevator speed rpm **n**	**F21,** Pr **18.29**	Calculated from operational rpm configuration
Nominal elevator speed mm/s **V**	**F19,** Pr **18.30**	Final operating speed of elevator in mm/s
Roping **Z**	**F16**, Pr **20.10**	Elevator roping 1:1, 2:1, 3:1, 4:1
Sheave **D**	**F15**, Pr **19.29**	Sheave diameter in mm
Gearing **iG**	**F17**, Pr **19.30**	Gear ratio numerator
Gearing **GZ**	**F18**, Pr **19.27**	Gear ratio denominator

The nominal elevator rpm in **F21**, Pr **18.29** is calculated based upon the elevators mechanical conditions as follows:

n = **V** x **iG** x **Z** x **60** / (π x **D** x **GZ**)

Therefore:

Pr **18.29** = Pr **18.30** x Pr **19.30** x Pr **20.10** x **60** / (π x Pr **19.29** x Pr **19.27**)

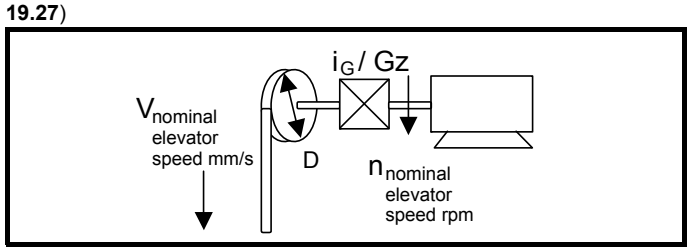

4.13 Load measurement for evacuation

The load measurement can be used both for determining the direction for evacuation with least load and also to generate an overload signal. From default the load measurement feature is enabled with Pr **20.08** set to 200 ms. To disable load measurement set Pr **20.08** “time for load measurement” to zero.

The load difference between the car and the counterweight is measured and displayed in Pr **20.19** as a % of the nominal torque after the brake release delay **F37**, Pr **19.25** and time for load measure Pr **20.08** has elapsed.

Figure 4-20 Load measurement

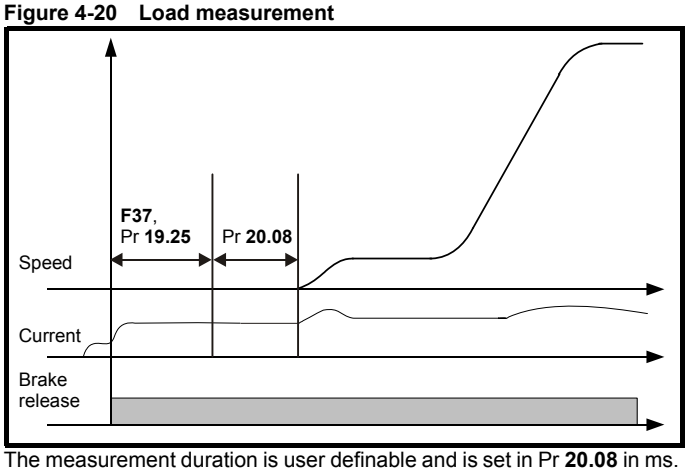

The measurement duration is user definable and is set in Pr **20.08** in ms. This measurement is set at 200 ms as default, this being sufficient for determining the load and direction. The measurement duration if set to be longer, for example 500 ms, will result in more accurate results. This does however result in a longer time required for the measurement and therefore should be considered when planning / setting up for the application.

To start the evacuation in the direction of least load, the measured load value when the brake was last opened, is saved in Pr **20.19** in the unlikely event that there should be a mains power failure. The direction is displayed in Pr **19.37**. This signal should be sent to the elevator controller using a programmable digital output, Pr **8.xx** = 19.37.

Pr **19.37** from default has a direction set-up as follows; this configuration can be inverted if required using Pr **19.39**.

Pr **19.37** = On, Load in Motoring direction

Pr **19.37** = OFF, Load in Regenerative direction

Figure 4-21 Load measurement

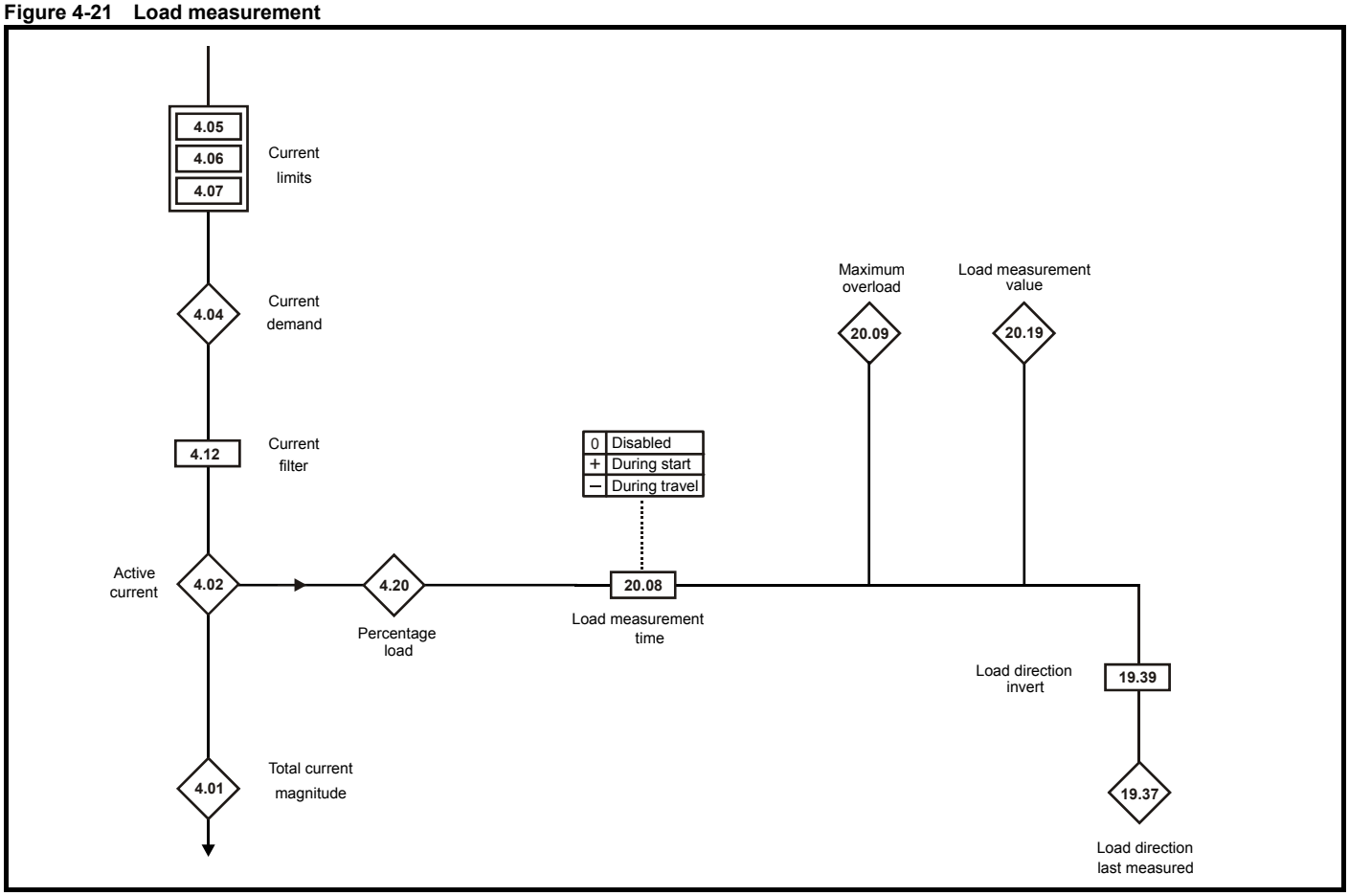

4.13.1 Overload display

The overload bit Pr **19.36** is created by comparing the measured load in Pr **20.19** with the overload threshold that is set in Pr **20.18** as a % of nominal torque.

4.14 Load cell compensation

The Elevator Solution Software has a feature which allows load cell compensation to be implemented to overcome starting issues. The load cell or measuring transducer is installed to the elevator and connected directly to analog input 2 on the Unidrive SP. The load cell can be either a bipolar voltage or unipolar current type.

The load cell from the elevator to the Unidrive SP provides load feedback that is used by the Elevator Solution Software to pre torque the motor prior to the brake being released. The load cell when connected to analog input 2 on the Unidrive SP can be calibrated for both zero load and full load using the load cell offset Pr **19.22** and load cell scaling Pr **19.21**.

Table 4-20 Load cell parameters

Parameter	Description
Pr **04.09**	Torque offset % for compensation
Pr **04.10**	Enable software compensation
Pr **07.02**	% Load cell input on analog input 2
Pr **19.21**	Scaling for load cell input
Pr **19.22**	Offset for load cell input
Pr **19.23**	Filter for load cell input

Figure 4-22 Load cell compensation

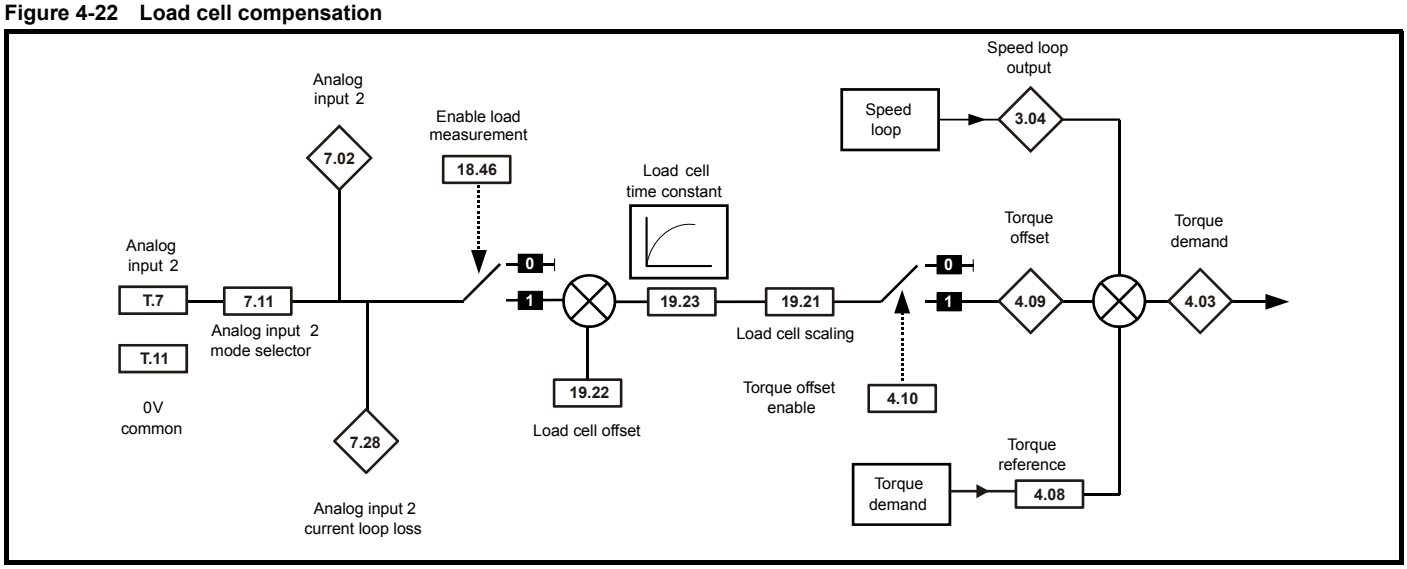

NOTE

When using unipolar load cell devices the Elevator Solution Software must be configured to operate as a bipolar device internally to indicate both positive and negative torque compensation.

Torque offset Pr **4.09** = Pr **19.21** (Scaling) x Pr **19.23** (Filter) x (Pr **7.02** – Pr **19.22** (Offset))

Balanced car

Pr **19.22** (Offset) must be set-up for Pr **4.09** = 0 for balanced car. If Pr **4.09** is not 0 for a balanced car Pr **19.22** should be adjusted.

Empty car

The scaling in Pr **19.21** should be adjusted as follows so Pr **19.21**new = Pr **19.21**old x Pr **4.03** / Pr **4.09**.

4.15 Inertia compensation

Inertia compensation can be implemented to overcome system inertia resulting in high speed loop gains. Implementing the inertia compensation will allow the speed loop gains to be reduced and overcome any increased acoustic noise. The inertia compensation feature allows the acceleration torque in Pr **4.08** to be dynamically optimized.

The inertia compensation is enabled with Pr **18.49** = 1 and the compensation applied directly to Pr **4.08**. Once the inertia compensation is enabled, the reference acceleration is generated during the Start jerk and displayed in Pr **19.04**.

Scaling can be applied to the inertia compensation through Pr **19.19** this should be adjusted so that the speed controller output Pr **3.04** is nearly constant after the brake has opened and also during both the starting and stopping.

The inertia compensation scaling Pr **19.19** can be calculated from the mechanical data as follows:

Pr **19.19 = 1000 x (J_G x i) / (M_N x R)**

Where:

J_G Inertia of the system in kgm^2 apply to the motor shaft

M_N Rated motor torque in Nm

R Radius of the sheave in m

i Gear ratio

Figure 4-23 Inertia compensation

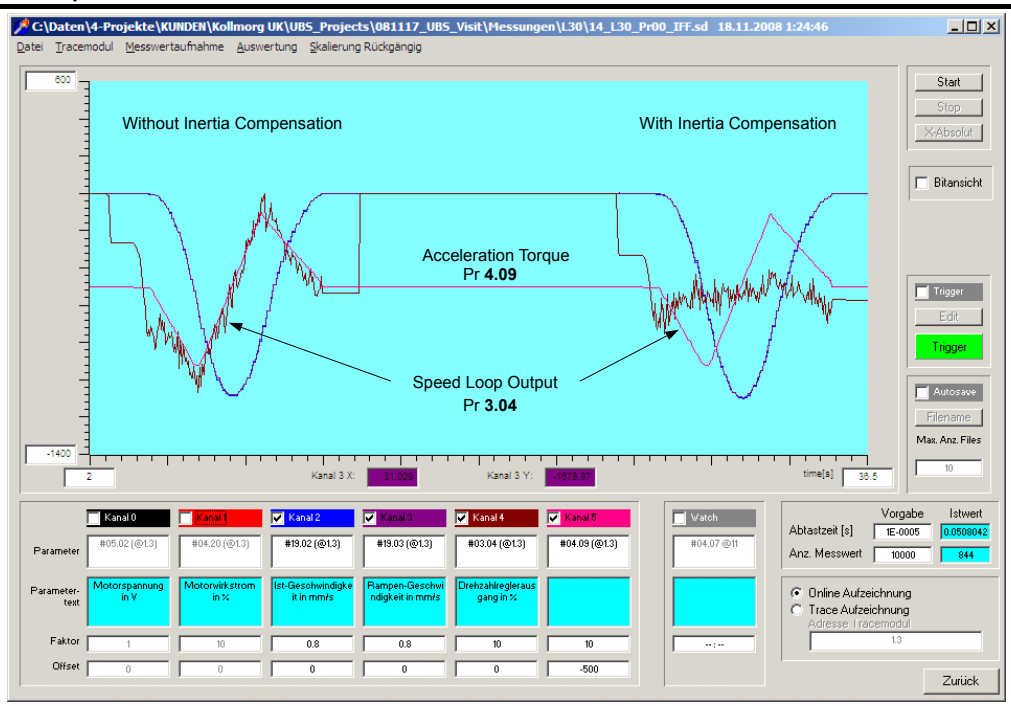

Figure 4-24 Inertia compensation

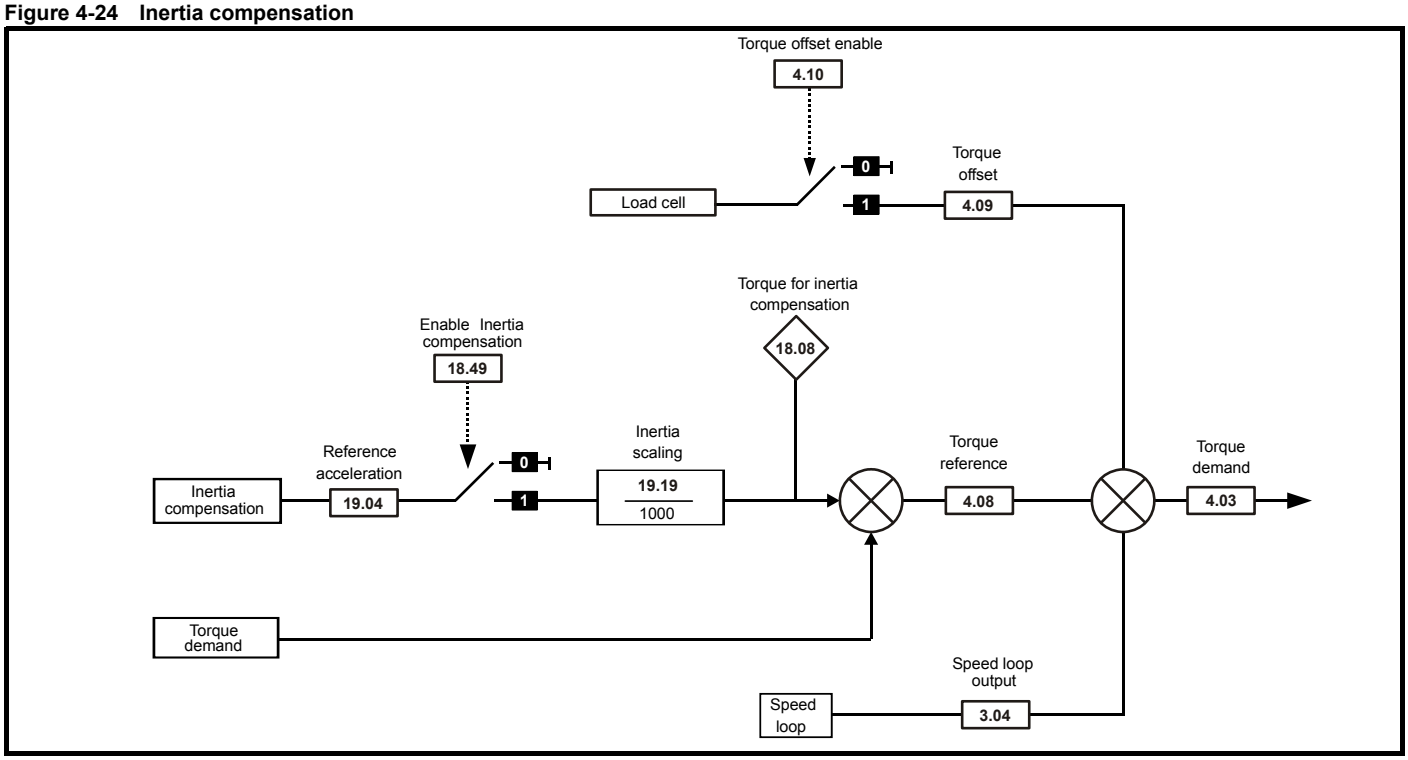

4.16 Variable speed loop gains, current loop gains, current loop filters

In order to optimize control of the Unidrive SP and Elevator Solution Software, a number of gain selections for the speed loop and current loop are provided. Also included are variable current loop filters, which can be used in line with the variable gains. A total of three selections for the speed and current loop gains are provided as follows. The selections allow gains to be defined for the Start, Travel and Positioning using Pr **18.48** and Pr **19.48.**

Table 4-21 Variable gains and Elevator Solution Software versions

Mode	Elevator Solution Software version
Constant gains	Available in all software versions
Variable Gains 1	Available in all software versions
Variable Gains 2	Available in software version V01.07 onwards
Variable Gains 2	Available in software version V01.13 onwards

NOTE

The active speed loop and current loop gains are shown in the following parameters (Speed loop) Pr **3.10** Kp, Pr **3.11** Ki, (Current loop) Pr **4.13** Kp, Pr **4.14** Ki.

NOTE

From Elevator Solution Software version V01.23.00, speed loop gains can be increased using Pr **71.56** as shown in the Table 4-22 .

Table 4-22 Speed loop gain control

Pr **71.56**	1	Speed loop Ki gain x 2
	2	Speed loop Kp gain x 2
	3	Speed loop Ki and Kp gain x 2

4.16.1 Constant gains

Pr **18.48** = OFF, Pr **19.48** = OFF

Constant gains provide fixed values for the speed and current loop for the Start, Travel and Positioning. The current loop filter is also fixed across the Start, Travel and Positioning.

Parameter	Detail
Speed loop	
Pr **0.07**, Pr **3.10**	Speed loop proportional gain Kp
Pr **0.08**, Pr **3.11**	Speed loop integral gain Ki
Pr **3.42**	Speed loop speed feedback filter
Current loop	
Pr **4.13**	Current loop proportional gain Kp
Pr **4.14**	Current loop integral gain Ki
F40, Pr **4.12**	Current loop filter

4.16.2 Variable gains 1

Pr **18.48** = On, Pr **19.48** = OFF

Variable gains 1 provides a speed loop gain setting for the Start and a setting for the Travel and Positioning. The current loop gains are fixed across the Start, Travel and Positioning.

The current loop filter can be defined for the Start and a setting for the Travel and Positioning. If required the variable current loop filter can be enabled/disabled and a fixed current loop filter selected with Pr **19.34.**

From default, the variable current loop filter is enabled Pr **19.34** = OFF. For this setting Pr **4.23** is the Start current loop filter and Pr **4.12** is the Travel and Positioning current loop filter.

The transition time between the Start, Travel and Positioning gains and current loop filter are defined in Pr **19.11**.

Parameter	Detail
Speed loop	
F43, Pr **18.27**	Speed loop proportional gain Kp **start**
F44, Pr **18.28**	Speed loop integral gain Ki **start**
F45, Pr **18.25**	Speed loop proportional gain Kp **travel**
F46, Pr **18.26**	Speed loop integral gain Ki **travel**
Pr **3.42**	Speed loop speed feedback filter
Current loop	
Pr **4.13**	Current loop proportional gain Kp
Pr **4.14**	Current loop integral gain Ki
F39, Pr **4.23**	Current loop filter **start**
F40, Pr **4.12**	Current loop filter **travel**
Pr **19.11**	Gain and filter transition time ms

Figure 4-25 Variable gains 1

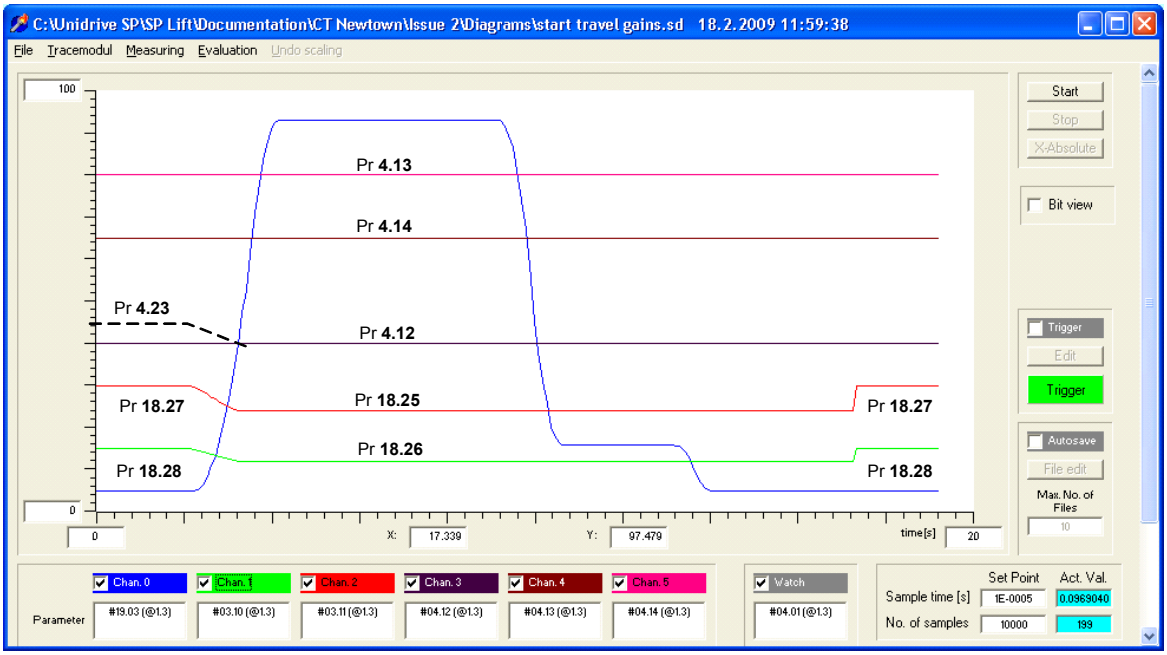

4.16.3 Variable gains 2

Pr **18.48** = On, Pr **19.48** = On

Variable gains 2 provide speed and current loop gain settings for the Start, Travel and Positioning. The current loop filter is also variable with settings available for the Start, Travel and Positioning. The transition time between the Start, Travel and Positioning gains and filters can either be carried out linearly with speed Pr **19.11** and Pr **20.30 = 0**, or using defined transition times set in Pr **19.11** and Pr **20.30** in (ms).

Parameter	Detail
Speed loop	
F43, Pr **18.27**	Speed loop proportional gain Kp **start**
F44, Pr **18.28**	Speed loop integral gain Ki **start**
F45, Pr **18.25**	Speed loop proportional gain Kp **travel**
F46, Pr **18.26**	Speed loop integral gain Ki **travel**
Pr **20.27**	Speed loop proportional gain Kp **positioning**
Pr **20.28**	Speed loop integral gain Ki **positioning**
Pr **3.42**	Speed loop speed feedback filter
Current loop	
Pr **20.25**	Current loop proportional gain Kp **start**
Pr **20.26**	Current loop integral gain Ki **start**
Pr **4.13**	Current loop proportional gain Kp **travel**
Pr **4.14**	Current loop integral gain Ki **travel**
Pr **21.22**	Current loop proportional gain Kp **positioning**
Pr **21.23**	Current loop integral gain Ki **positioning**
F39, Pr **4.23**	Current loop filter **start**
F40, Pr **4.12**	Current loop filter **travel**
Pr **21.16**	Current loop filter **positioning**
Pr **19.11**	Gain and filter transition time ms **start**
Pr **20.30**	Gain and filter transition time ms **positioning**

Figure 4-26 Variable gains 2

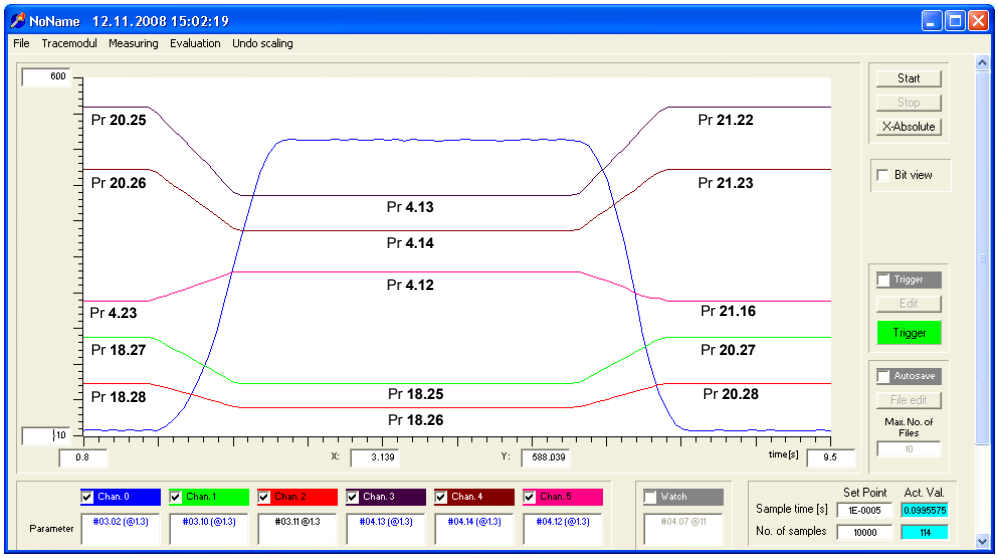

Figure 4-27 Variable speed loop

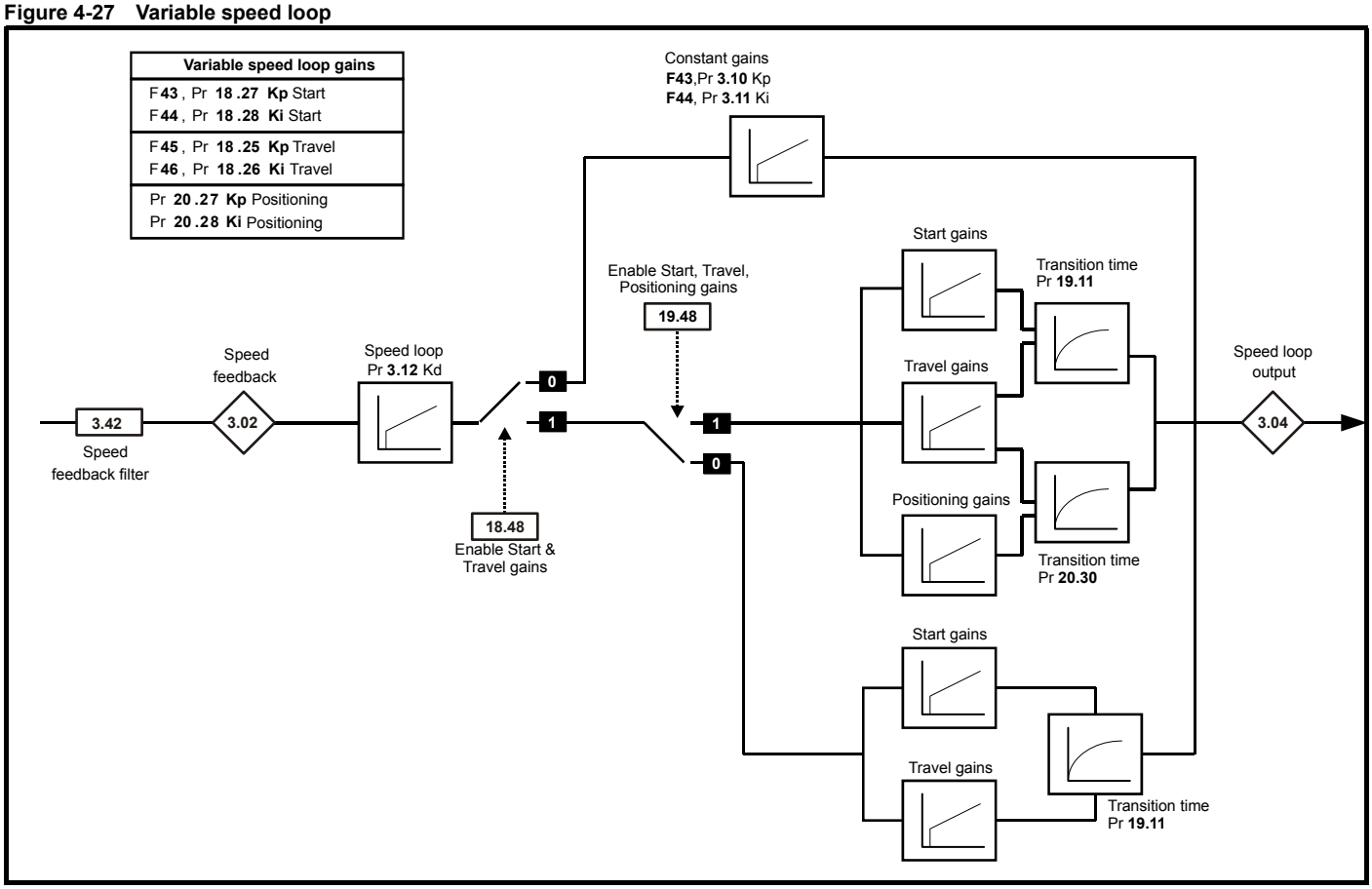

4.16.4 Variable current loop

Figure 4-28 Variable current loop

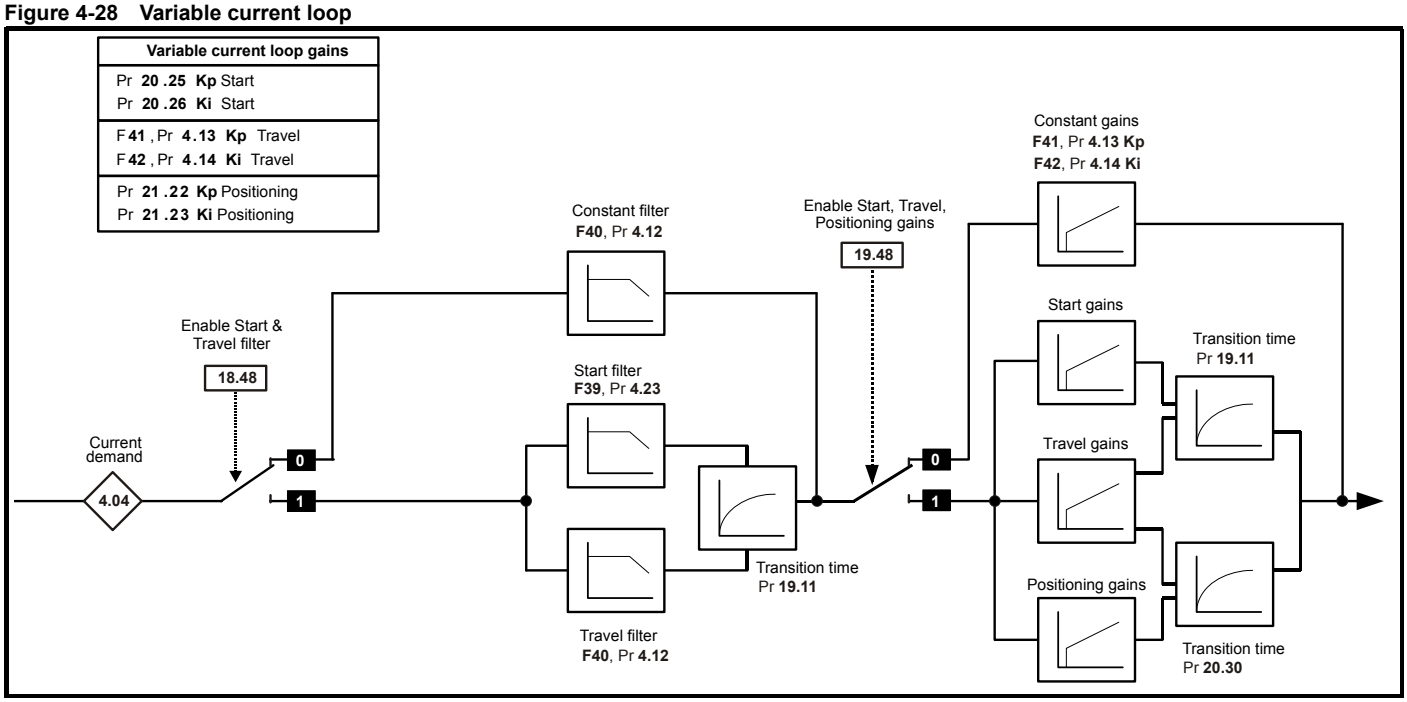

4.16.5 Gain transition times

For the variable gains there are two options for the transition times between the gain values as shown in the following table. Setting values in Pr **20.30** and Pr **19.11** will define a time in ms for the transition of gains during the start and positioning.

Parameter	Detail
Speed loop, Current loop	
Pr **19.11**	Gain and filter transition time ms **start**
Pr **20.30**	Gain and filter transition time ms **positioning**

Transition times

Setting both Pr **20.30** and Pr **19.11** to 0 will disable the timed defined transition as shown in Figure 4-29, and the variable gains will change following the speed linearly and using the speed threshold defined in Pr **20.29**.

For the variable gains transition time that follows the speed linearly as shown following, Pr **20.29** can be used to define the speed level at which the transition is completed from the Start to Travel or started during deceleration from Travel to Positioning.

Figure 4-29 Variable gains transition - following speed linearly

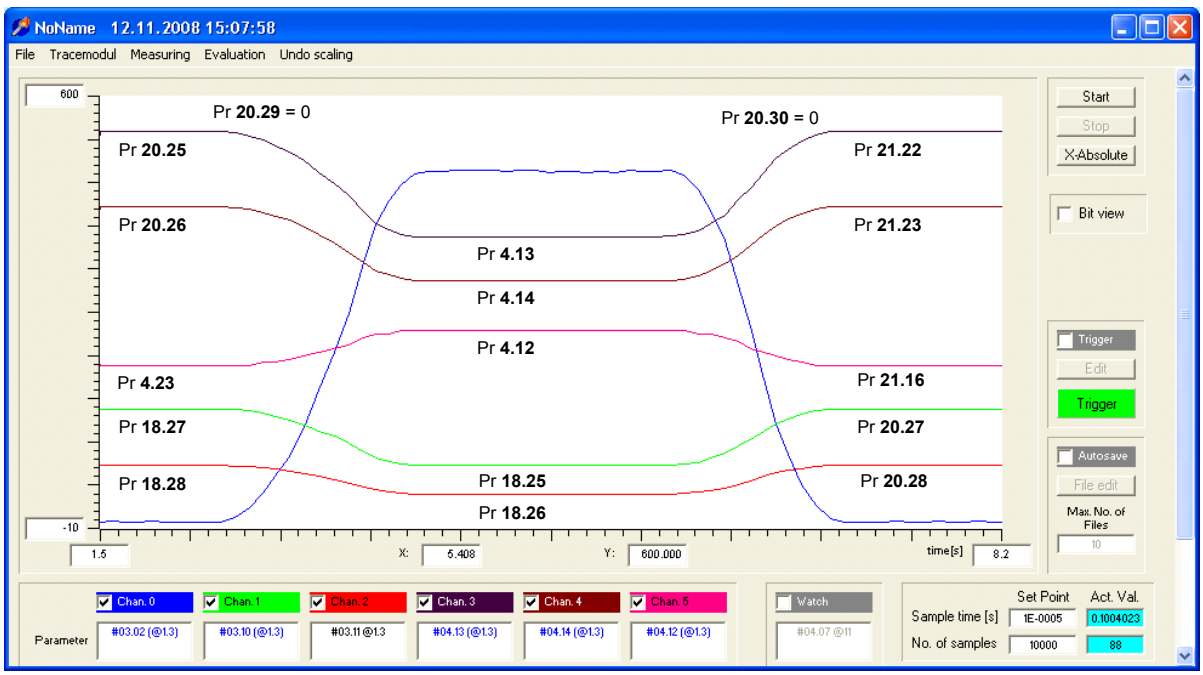

Figure 4-30 Variable gains transition Pr 20.30 and Pr 19.11 = time (ms)

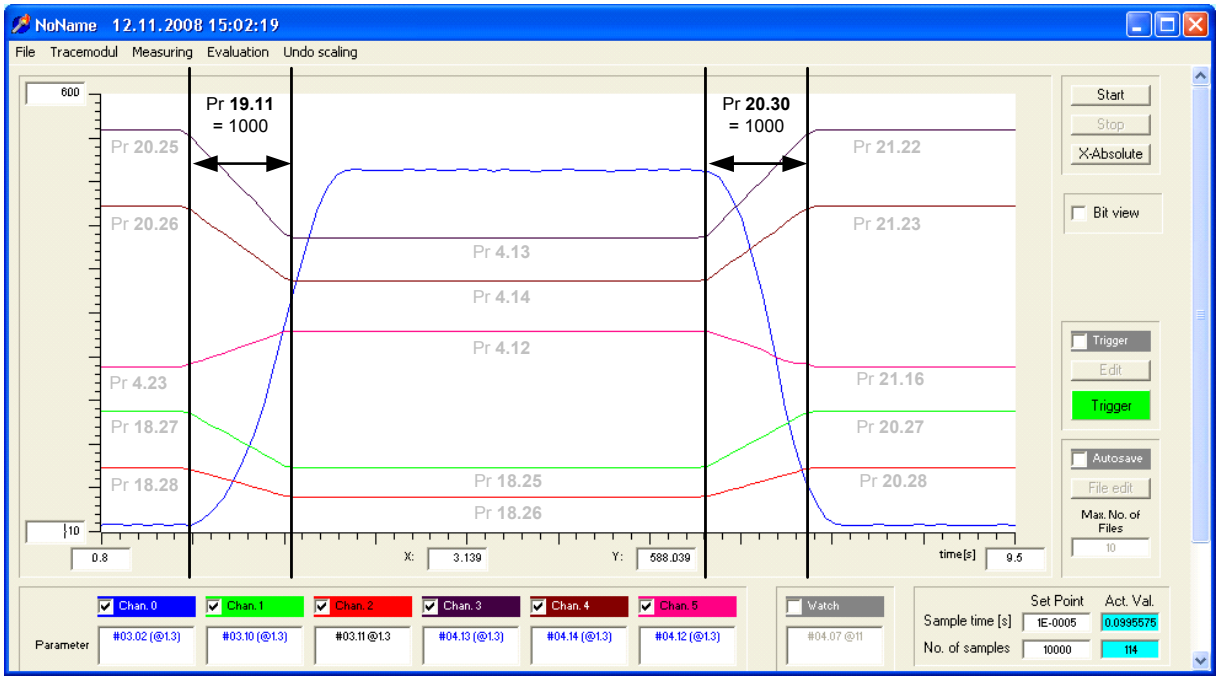

4.17 Brake control

The brake control for the elevator can be controlled either from the Unidrive SP and the Elevator Solution Software or from the elevator controller. From default the brake control output from the Unidrive SP and Elevator Solution Software is configured for a digital output on control terminal 25.

Table 4-23 Brake control parameters

Parameter	Detail
Pr **18.31**	Elevator Solution Software brake control output signal
Pr **8.22** = 18.31	Brake control on digital output, control terminal 25
Pr **8.27** = 18.31	Brake control on drive relay output, control terminals 41 and 42

4.17.1 Unidrive SP brake control from Elevator Solution Software

The parameter set-up for the brake control from the Elevator Solution Software function is Pr **8.22** = 18.31, or Pr **8.27** = 18.31. The control and timing sequence for the brake is shown in the following control diagrams. The brake apply delay can be adjusted in **F38**, Pr **18.24** and the brake release delay in **F37**, Pr **19.25**. If the Unidrive SP trips at any stage, the brake control will become inactive and the brake will be forced to close.

Table 4-24 Brake sequence - drive control

Step	Detail
	Elevator Start
1	The elevator controller applies direction and speed signals.
2	The elevator controller applies the drive enable and the motor contactor is closed by either elevator controller or Unidrive SP and Elevator Solution Software (control terminal 22 output).
3	The Elevator Solution Software applies 100 ms de-bounce delay for motor contactor and then enables the drive output.
4	Motor is magnetized with 100 ms delay time.
5	Brake release output becomes active on Unidrive SP along with brake release delay **F37**, Pr **19.25**
6	The Unidrive SP holds zero speed until brake-release delay and load measurement times have elapsed. The Elevator Solution Software now generates the speed profile.
	Elevator Stop
1	The elevator controller removes the speed signals on deceleration to the floor.
2	The elevator decelerates and positions at the floor level.
3	Brake output is de-activated and brake applied. Brake apply delay is active during stop Pr **18.24**.
4	The elevator controller removes the drive enable after **F38**, Pr **18.24** has elapsed. The motor is then demagnetized within a 200 ms delay period, and the motor contactor opened.
5	The elevator controller or Elevator Solution Software output opens the output motor contactor(s).

Figure 4-31 Brake control from the Elevator Solution Software – creep-to-floor

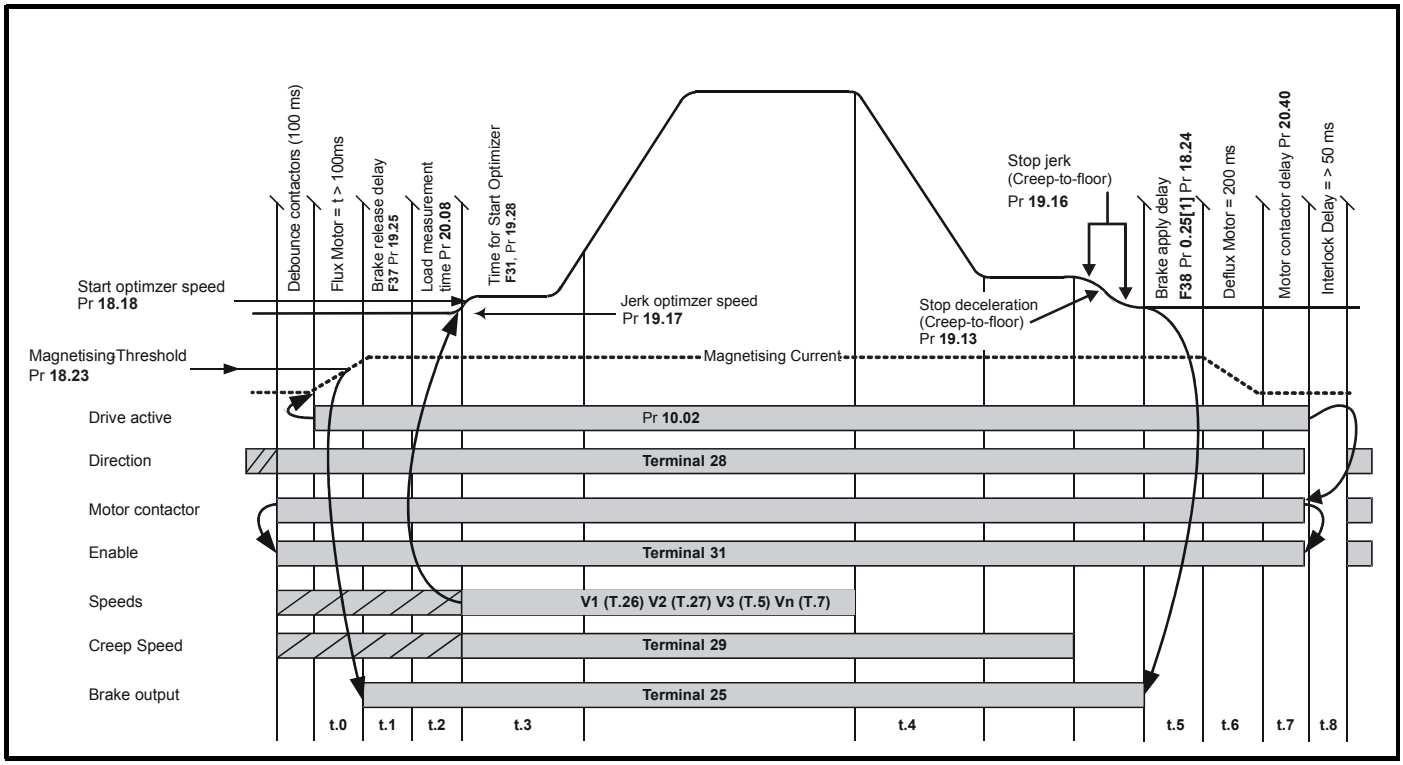

Figure 4-32 Brake control from the Elevator Solution Software – direct-to-floor

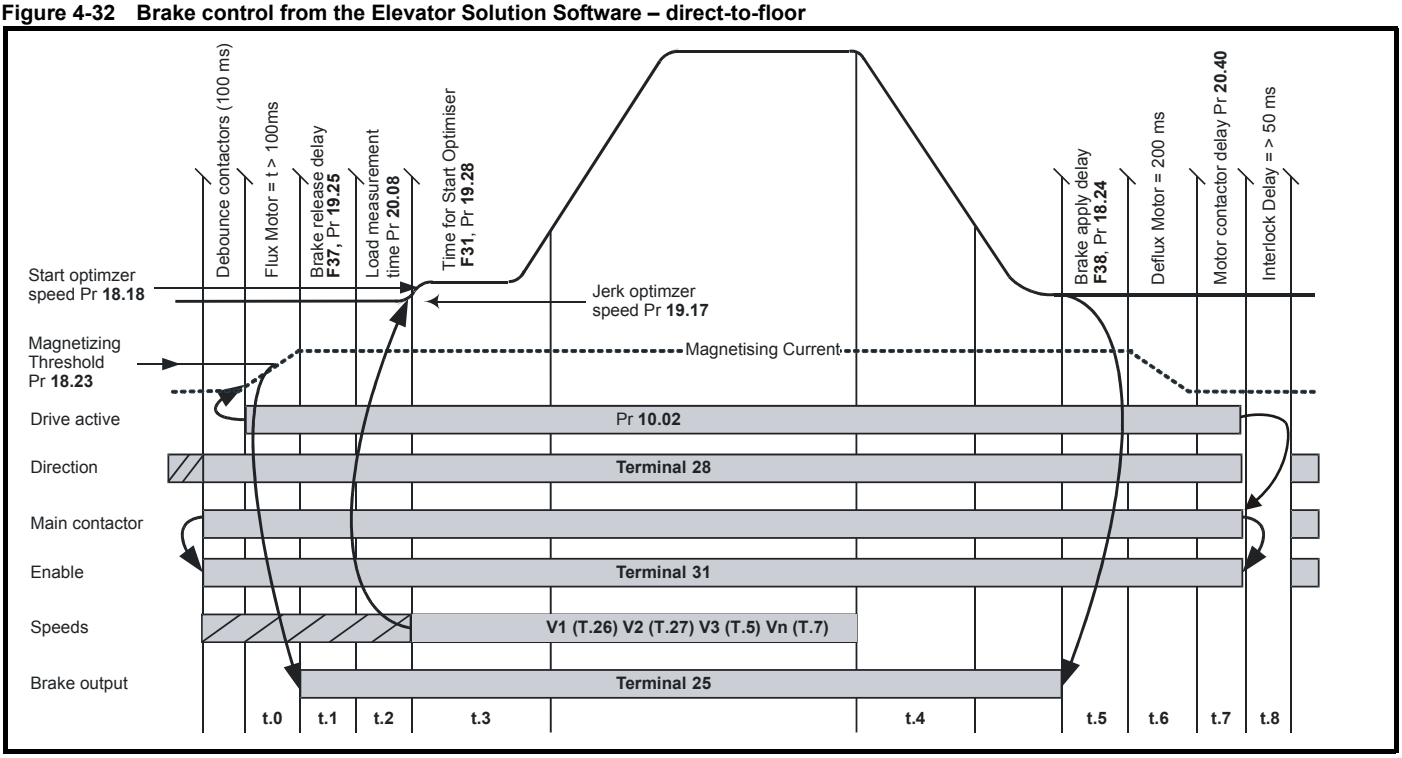

4.17.2 Brake control provided by the elevator controller

If the elevator controller is required to control the brake this has to be configured through Pr **8.22** = 18.43. This setting changes the function of Terminal 25 output to now be "motor magnetized" indication. Only once the motor is magnetized can the elevator controller release the motor's brake.

The control sequence is as follows:

Table 4-25 Brake sequence - elevator controller

Step	Detail
Elevator Start	
1	The elevator controller applies the drive enable.
2	The Unidrive SP magnetizes the motor and sets a digital output active when the motor is fully magnetized. Motor magnetized bit Pr **18.43**.
3	The elevator controller releases the brake and waits for any brake release delay external to the Unidrive SP and Elevator Solution Software.
4	After the brake release delay the elevator controller applies the direction and speed signals.
Elevator Stop	
1	The elevator controller removes the speed signals on deceleration to the floor.
2	The elevator decelerates and positions at the floor level
3	The brake output from the elevator controller is de-activated following a wait for any brake apply delay external to the Unidrive SP and Elevator Solution Software.
4	The elevator controller removes the drive enable and the motor is demagnetized with the 200 ms delay and motor contactors opened.
5	The elevator controller or Elevator Solution Software opens the output motor contactor(s).

It is recommended to set the brake release delay, **F37**, Pr **19.25** to a non-zero minimum value (for example 100). If the elevator controller removes the drive enable, the brake will be applied at that point, and the output motor contactor(s) will also be opened shortly afterwards.

4.17.3 Brake control monitoring

In addition to providing the brake control the Elevator Solution Software can also carry out brake monitoring using up to 2 digital inputs on the drive control terminals. In the case of incorrect operation, the Elevator Solution Software will generate a t083 trip.

To activate the brake contact monitoring, one or two digital input terminals from control terminal T24 to T29 of the drive can be assigned to the function. These are set-up by setting the terminal function Pr **8.2x = 19.34** (for Brake contact 1) and / or setting the terminal function Pr **8.2x = 19.36** (for Brake contact 2). The digital input terminal is monitored by the Elevator Solution Software to follow the brake output state Pr **18.31**. If the state of the activated brake contact monitoring does not follow inside the brake release delay Pr **19.25** or brake apply delay Pr **18.24** the Elevator Solution Software will generate a t083 trip.

The brake contact monitoring is available with Elevator Solution Software V01.22.00 and later.

4.18 Advanced door opening

From the default setting for the Elevator Solution Software there is an advanced door opening feature available. This feature begins to open the elevator car doors prior to the elevator car reaching the floor level. This allows the elevator travel times to be reduced.

The advanced door opening signal is generated by the Elevator Solution Software based upon a speed threshold and output to the elevator controller via control terminal T24 on the Unidrive SP.

The advanced door opening speed is configured by the User in Pr **18.21**. There are also invert and status bits available for the advanced door opening as detailed following.

Table 4-26 Advanced door opening parameters

Parameter	Detail
Pr **18.21**	Advanced door opening speed in mm/s defined by the User.
Pr **8.21**	Advanced door opening set-up for the output on T24 of Unidrive SP. Pr **8.21** = 18.32.
Pr **8.11**	Advanced door opening output signal invert.
Pr **18.32**	Advanced door opening status

Figure 4-33 Advanced door opening

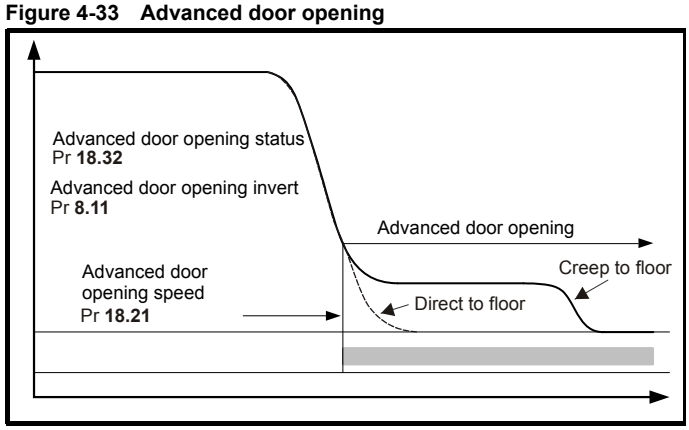

4.19 Motor contactor control

The motor contactors in an elevator application can consist of following possible configurations:

1. The standard two output motor contactors
2. A single output motor contactor. Can be achieved with Unidrive SP and in accordance with SAFE TORQUE OFF and EN81-1.
3. Zero output motor contactors. Can be achieved with Unidrive SP and in accordance with SAFE TORQUE OFF and EN81-1.

NOTE

Also refer to UNISP067 Unidrive SP, Safe Torque Off, LIft (Elevator) applications and output motor contactor solutions.

WARNING

If the cable between the drive and the motor is to be interrupted by a contactor or circuit breaker, ensure that the drive is disabled before the contactor or circuit breaker is opened or closed.

A recommended motor contactor to be installed between the drive and motor for safety purposes can be an AC3 type.

Switching the motor contactor when the drive output is active can lead to high amounts of excess voltage due to the high levels of inductance, especially with gearless elevator motors.

This can lead to:

1. Spurious OI.AC trips (which cannot be reset for 10 s)
2. High levels of radio frequency noise emission
3. Increased contactor wear and tear
4. Motor wear and tear / damage
5. In extreme repetitive cases drive failure can also occur

Output motor contactor control can be implemented through either the elevator controller or the Elevator Solution Software. The Elevator Solution Software feature generates an output to the elevator controller that allows the output motor contactor control to be synchronized with the drive enable. This feature prevents the output motor contactor being operated while the enable is active and overcomes the above issues.

The Elevator Solution Software can be set-up to control the output motor contactor using either a digital output on control terminal T22 or using the drive relay on control terminal T41, T42. For the output motor contactor control using the digital output on T22 Pr **8.28** should be set to Pr **19.32**, for output motor contactor control on the drive relay Pr **8.27** should be set to Pr **19.32**.

Following are the associated parameters for the output motor contactor control.

Table 4-27 Motor contactor control parameters

Parameter	Detail
Pr **19.32**	Motor contactor control output
Pr **19.33**	Feedback from motor contactor [Trip **t078** generated three seconds after reaching the floor level if motor contactor does not open]
Pr **19.40**	Enable motor contactor feedback monitor
Pr **20.20**	Motor contactor control delay time
Pr **20.40**	Motor contactor control release delay time
F38, Pr **18.24**	Brake closing time which also applies to motor contactor closing time

To ensure the output motor contactor is closed before the drive is enabled, or the drive is disabled before the output motor contactor is opened, auxiliary contacts should be used with the enable signal.

The auxiliary contacts should be connected in series with the drive SAFE TORQUE OFF (T31) as shown following. The following diagrams show the two options for connection of the auxiliary contacts when using either single or dual output motor contactors.

The Elevator Solution Software sequencing of the enable on the Unidrive SP is delayed by approximately 100 ms after the drive enable at T31 is active to allow for de-bouncing of the output motor contactor. This prevents any spurious trip during start due to arcing of output motor contactor. When ending a normal travel, the contactor control output is also delayed internally by the same time defined for the brake closing time.

The delay for the control of the motor contactor is shown in Pr **20.20** (ms). Negative values mean the motor contactor is opened on enable, which must be prevented.

With negative delays the brake closing time **F38**, Pr **18.24** should be reduced by at least the time displayed in Pr **20.20**. The ideal value for Pr **20.20** is 50 to 100 ms. Then even with normal travel the output motor contactor will open without current present on the motor.

If the elevator controller opens the safety circuit and motor contactor during a fault condition or an inspection run, the SAFE TORQUE OFF on T31 should be opened immediately. This should be opened by an additional fast relay or other suitable measure (delay < 4 ms) in order to prevent the output motor contactor being operated when power is flowing to the motor. In addition the motor should be protected using suitable voltage limiters (varistors).

4.19.1 Drive enable

The drive enable on control terminal 31 of the drive when opened provides a SAFE TORQUE OFF function. This can, in many cases replace one or both of the standard two output motor contactors with the SAFE TORQUE OFF being compliant with EN81-1.

The SAFE TORQUE OFF function provides a means for preventing the drive from generating any torque at the motor, with a very high level of integrity. It is suitable for incorporation into a safety system for a machine. It is also suitable for use as a conventional drive enable input. The SAFE TORQUE OFF function makes use of the special property of an inverter drive with an induction motor, which is that torque cannot be generated without the continuous correct active behavior of the inverter circuit. All credible faults in the inverter power circuit cause a loss of torque generation.

The SAFE TORQUE OFF function is fail-safe, so when the SAFE TORQUE OFF input is disconnected the drive will not operate the motor, even if a combination of components within the drive have failed. Most component failures are revealed by the drive failing to operate. SAFE TORQUE OFF is also independent of the drive firmware.

4.19.2 Motor contactor control options

The following figures show the three possible configurations which can be applied:

1. Standard dual output motor contactors
2. Single output motor contactor + single travel safety relay + drive SAFE TORQUE OFF input
3. Zero output motor contactors + dual travel safety relays + drive SAFE TORQUE OFF input

NOTE

For more detailed information on these possible configurations, refer to the application note *Unidrive SP, SAFE TORQUE OFF, Lift (Elevator) applications & output motor contactor solutions* available from your drive supplier.

NOTE

If an output shorting contactor is being used in the system with any of the following three possible configurations (as shown in Figure 4-34, Figure 4-35 and Figure 4-36), this is acceptable however the FAST disable must be used on the Unidrive SP.

Figure 4-34 Standard dual output motor contactor solution

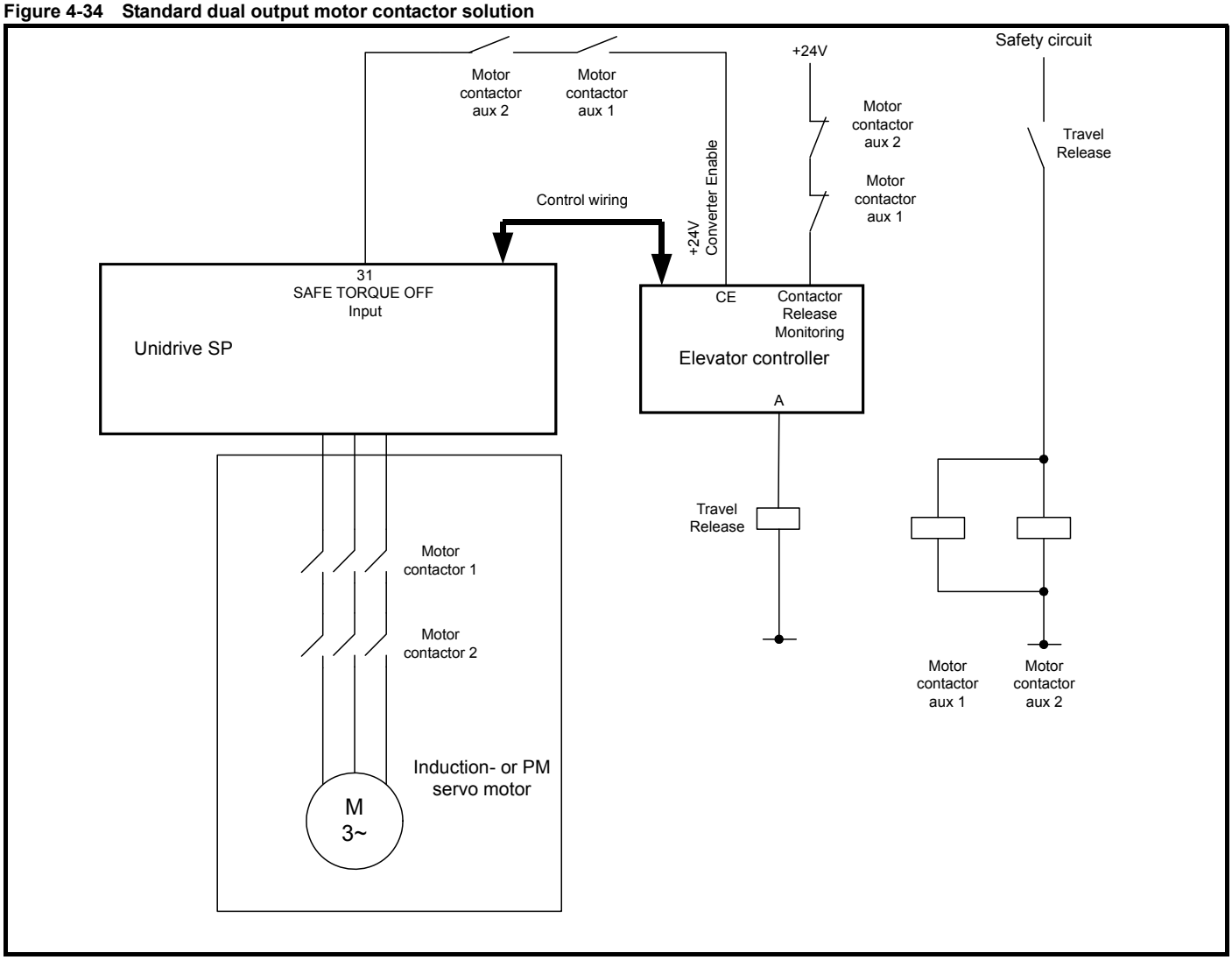

The SAFE TORQUE OFF function on Unidrive SP, provides a highly secure method for preventing the motor from being driven when the enable signal is absent. It can be used in place of one of the two output motor contactors, or both output motor contactors normally used for this purpose in a Lift (Elevator) system, giving conformity to European standard EN 81-1:1998 (Safety rules for the construction and installation of lifts. Electric lifts) and providing savings in space, cost and maintenance requirements.

The SAFE TORQUE OFF function is available on the Unidrive SP on control terminal T31. A motor supplied by a Unidrive SP can only produce torque if +24 V is applied to the this input. The SAFE TORQUE OFF function only operates in positive logic (+24 V) on Unidrive SP.

According to the EN81 requirements, energy flow to the Lift (Elevator) motor from the drive must be interrupted with two independent switching devices. Using the SAFE TORQUE OFF function, this is achieved using external travel relays with forcibly guided contacts or with a self-monitoring safety device interrupting the SAFE TORQUE OFF input as shown following. The coils of the travel relays are supplied by the safety circuit. If a safety device interrupts the safety circuit the relay contacts will open the SAFE TORQUE OFF input on the Unidrive SP and interrupt the supply to the motor, switching the power transistors in the Unidrive SP "OFF" and preventing torque being generated in the motor.

The Lift (Elevator) controller or the Unidrive SP monitors the forcibly guided travel relay contacts. If the forcibly guided relay contacts do not open after the travel, or during the next requested start of the Lift (Elevator) operation must be prevented.

Figure 4-35 TÜV approved single output motor contactor, single travel relay solution

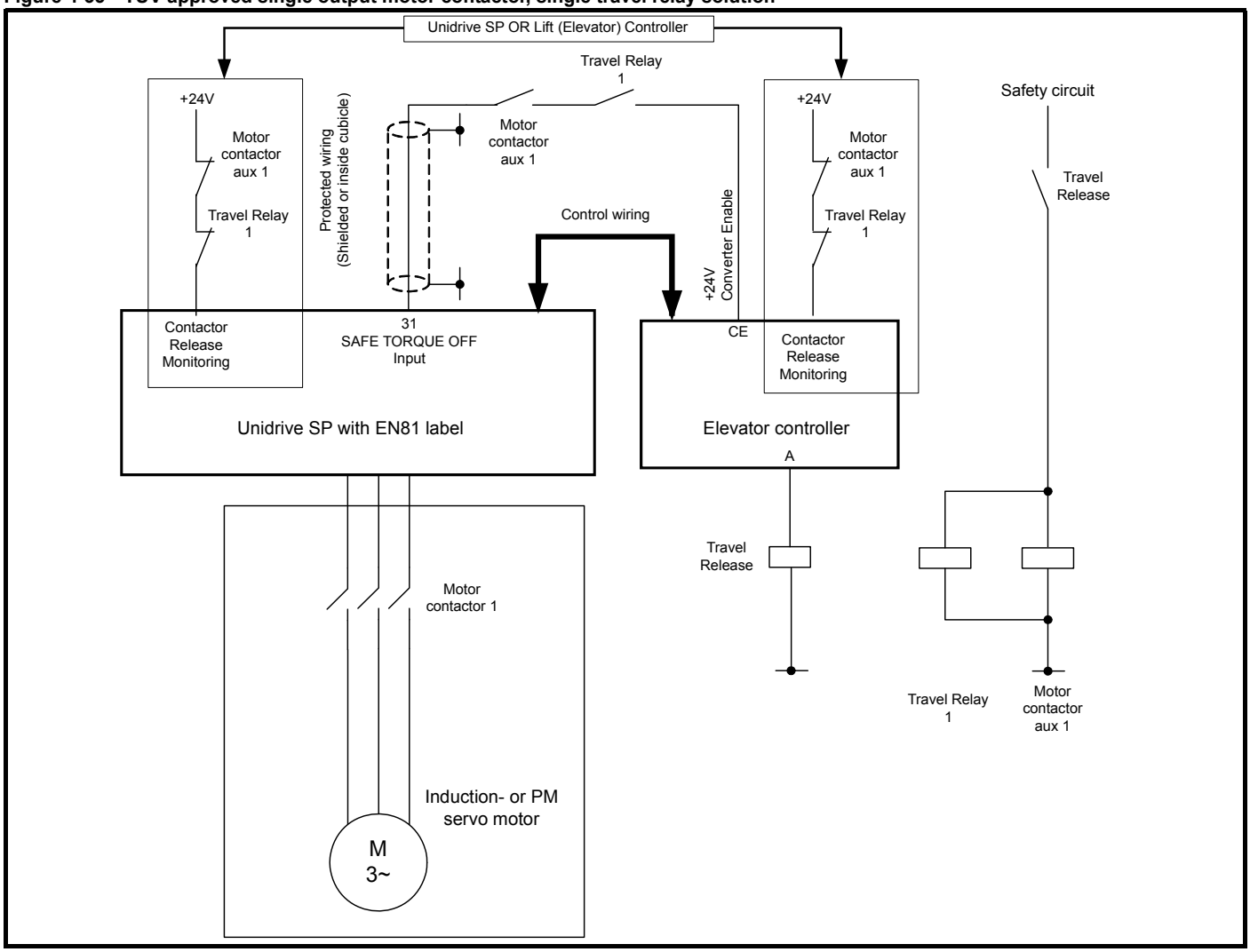

4.19.3 Monitoring functions by the drive

Opening of the relay contacts is monitored by the Lift (Elevator) controller or another suitable device. If one relay does not open after a travel, the next travel has to be prevented. Additional to the monitoring device, the Lift (Elevator) software for both STD (V01.14 onwards) and DCP (V01.26 onwards) for the Unidrive SP monitor these signals after each start and each stop as follows:

1. After each start is initiated by a speed selection over STD or DCP interface inside 3 seconds.
   The STO input is closed … and
   If used the Fast Disable input is closed
2. After each stop and after the travel is initiated by zero speed inside 3 seconds
   The STO input is opened … and
   If used the Fast Disable input is opened … and
   The current in the motor decreases to < 25%

If one of these conditions is not met, the Unidrive SP Lift (Elevator) software will trip the drive and show a trip code identifying the cause and save this to the trip log. With the trip active the drive is disabled, and can only be activated following a drive reset. The relevant trip codes are:

- Trip t075, Incorrect control of STO input (control terminal 31) or incorrect control of speed selection.
- Trip t074, Incorrect control of Fast Disable input or incorrect selection of control terminal (digital input control terminal user defined, routed to 6.29 (Fast Disable)).
- Trip t072, No current decay or failure of the internal disable function

NOTE

The SAFE TORQUE OFF (STO) input state is monitored and displayed in Pr **8.09** from drive software V01.14.00 onwards (July 2007) for Unidrive SP.

NOTE

The monitoring function from either the Unidrive SP or Lift (Elevator) controller for the travel relay contact(s) must be regularly checked during inspections of the Lift (Elevator).

NOTE

The output motor contactor monitoring in the Unidrive SP with the Lift (Elevator) software is enabled with Pr **19.40** and the feedback is routed to Pr **19.33** using a digital input.

Figure 4-36 TÜV approved zero output motor contactors, dual travel relay solution

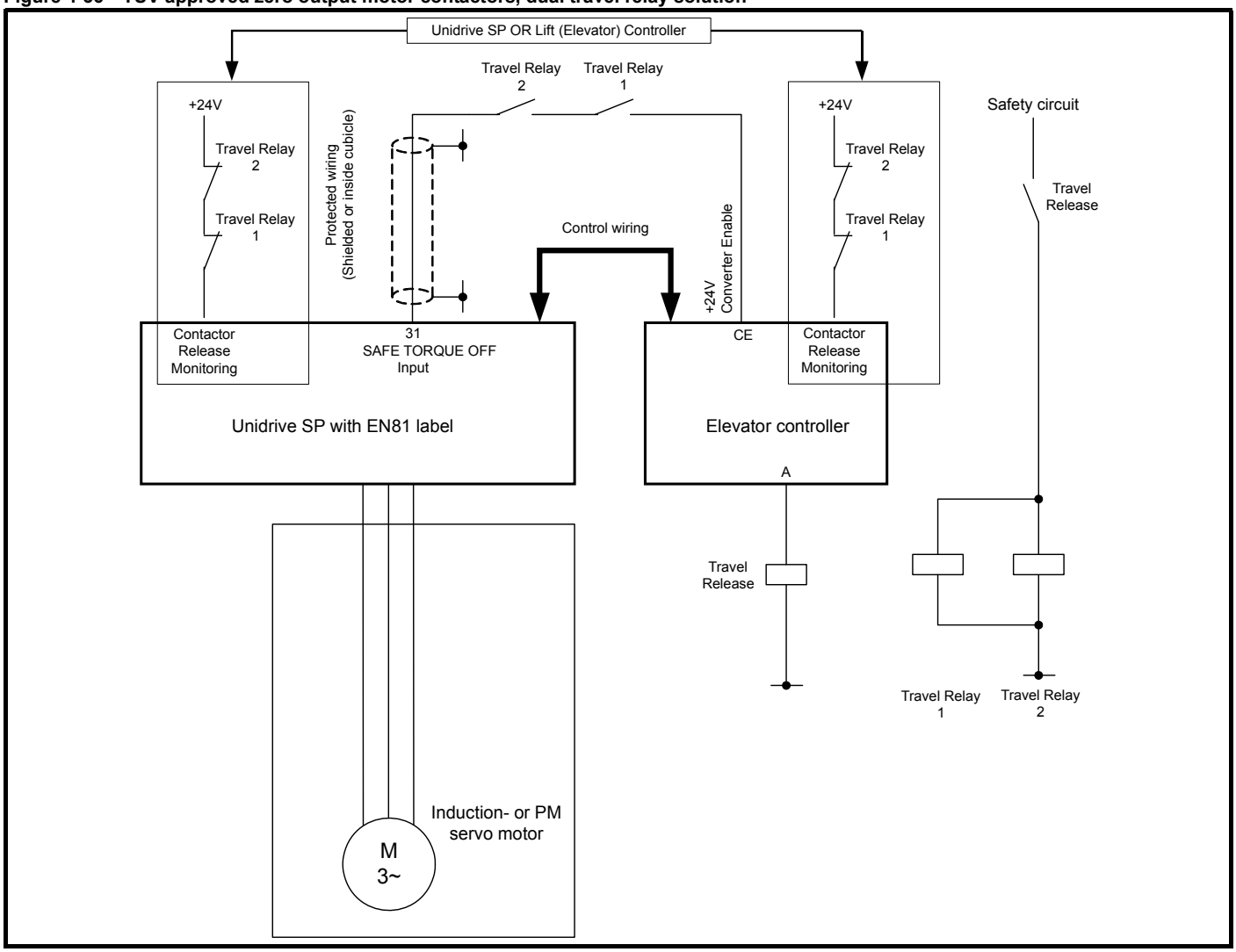

4.19.4 Motor contactor control monitoring

In addition to providing the motor contactor control the Elevator Solution Software can also carry out motor contactor control monitoring using a digital input on the drive control terminals. In the case of incorrect operation the Elevator Solution Software will generate a t0xx trip.

The motor contactor control release monitoring according to EN81 can be done by the drive. To activate the motor contactor control release monitoring one digital input, control terminal T24 to T29 of the drive is assigned to this function by setting the control terminal function Pr **8.2x = 19.33**. The digital input terminal is monitored to be "On" (+24 V) when contactors are released and to be "OFF" (0 V), when the contactors are closed. If the correct control state does not follow within 3 seconds a t078 trip will be generated.

The motor contactor control monitoring is available with Elevator Solution Software V01.22.00 and later.

4.19.5 Fast disable

The Unidrive SP has a FAST disable feature that can be used to disable the Unidrive SP in under 650 µs, compared to the standard disable time of 10 ms with the drive SAFE TORQUE OFF input. This feature can be used for all operating modes and only requires an additional control input on the drive to be routed to Pr **6.29**. The FAST disable would typically be used to avoid OI.AC trips where for example an output shorting contactor is being used in the application, or to avoid OI.AC trips during operation in inspection mode.

The FAST disable can be configured as follows:

1. In series with the standard SAFE TORQUE OFF signal from the elevator controller, the SAFE TORQUE OFF signal from the elevator controller is connected to control terminal 31 on the Unidrive SP. T31 is then linked across to another free digital input, which is then routed to Pr **6.29**. In this configuration the system no longer complies with EN81 for a single or zero output motor contactors and dual output motor contactors are required.
2. In parallel with the standard SAFE TORQUE OFF signal from the elevator controller, an additional Enable / Disable signal from the elevator controller is connected to a free digital input, which is then routed to Pr **6.29** (FAST disable). In this configuration, the system complies with EN81 for either a single output motor contactor or zero output motor contactor configuration.

4.20 Blocked elevator releasing

The blocked elevator releasing function is available in the Elevator Solution Software to release the elevator following an overspeed condition where the mechanical lock has been activated. The software feature is designed to release the elevator following removal of the mechanical lock.

By default the blocked elevator releasing function is disabled Pr **19.45** = OFF, the blocked elevator releasing function is enabled by setting Pr **19.45** = On.

The attempt to release the blocked elevator is carried out during the next start following the removal of the elevator mechanical lock and enable of the software function Pr **19.45** = On, the blocked elevator releasing can be enabled using a digital input on the drive from the elevator controller.

To generate maximum torque and jerk, the following sequence is also carried out:

- Following error detection disabled
- Soft start function disabled
- Ramps disabled
- Creep speed selected

150 ms after current limit is reached at zero speed, the direction is reversed to free the elevator for a further 50 ms.

The blocked elevator function detects the blocked elevator condition using the current limit active Pr **10.09** and the zero speed active Pr **10.03** following an attempt to run with Pr **19.45** = On. The detection time for the blocked elevator condition is 150 ms.

Once the drive is enabled along with the blocked elevator function, and a blocked elevator condition is detected the ramps are disabled, creep speed is selected and the direction of the elevator is reversed to release the elevator.

This sequence will continue where the elevator operates for 150 ms in one direction and 50 ms in the opposite direction, as long as the elevator is blocked and the drive enable along with the blocked elevator releasing function Pr **19.45** are active. To stop the blocked elevator releasing function the drive enable should be removed this is then automatically followed by Pr **19.45** being set to OFF and the blocked elevator releasing function being disabled.

Figure 4-37 Blocked elevator releasing

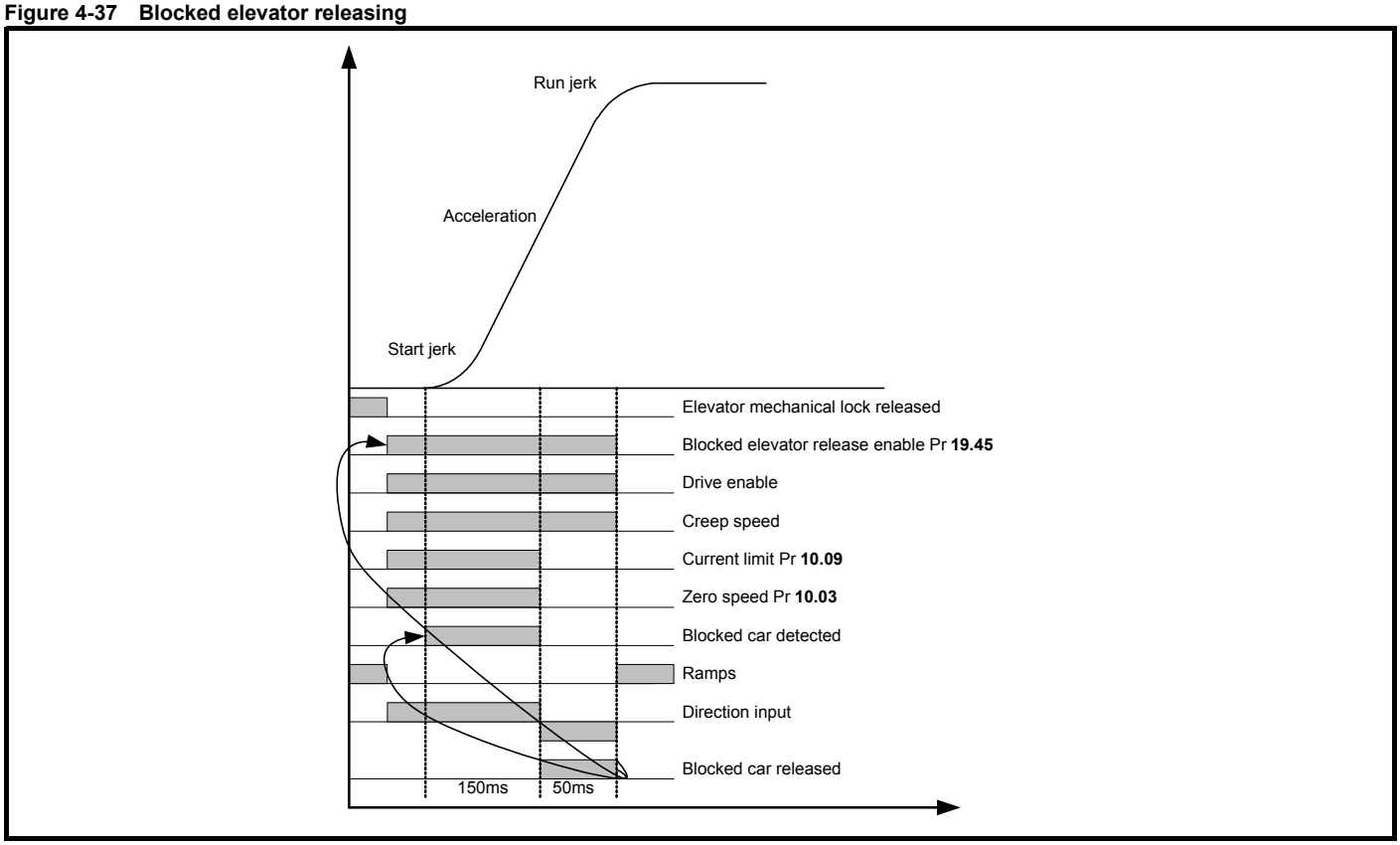

4.21 Unintended car movement (UCM) test support

For testing the monitoring and protection device against Unintended Car Movement (UCM) according to EN81 A3 in version V01.22.00, a function was added which allows a start to be carried out the with the maximum acceleration in the given direction. To get the maximum acceleration, some start functions are disabled, such as start optimization and load measurement. In addition the speed and position following error detection are also disabled (Pr **19.18**, Pr **19.24** = 0) to allow the test of the UCM monitoring unit.

The UCM test is carried out as a special travel and this is activated by two settings. These settings are not stored and therefore are not active during switch on. Both settings are disabled after each travel. If a new test is to be executed, the settings have to be repeated. All settings are disabled after 60 seconds.

The activation of the UCM test travel is as follows:

1. Pr **13.21** = 3333
2. Pr **1.44** = 1

The following travel is carried out as a simulation for the UCM movement. From the start, the car will be accelerated with the maximum current set in Pr **4.07** in the selected direction. To measure the maximum distance travelled the following should be tested:

1. Travel with empty cabin upwards
2. Travel with full cabin downwards

The torque level for the acceleration can be adjusted by Pr **4.07**. Starting with 100 % load in the cabin the maximum adjustable value in Pr **4.07** has to be checked. This can be calculated using a servo motor as follows:

Max (Pr 4.07) = 175 % x Nominal inverter current / Nominal motor current

The over speed detection of the inverter could lead to over speed trips if the threshold of Pr **1.06** + 10 % is exceeded. To prevent the drive tripping the Pr **1.06** has to be increased for the test.

The activation of Pr **1.44** can also be carried out using a digital input on the drive. If the terminal is used to activate Pr **1.44** only the code 3333 has to be entered in Pr **13.21** to activate the UCM simulation travel.

NOTE

To prevent a movement with open cabin doors, the fast start is disabled if the UCM simulation mode test is selected, and will therefore prevent a start of travel.

NOTE

This function must only be used where it can be verified that no person is in the lift, or can enter the lift. In addition it must be assured that the mechanics of the lift and the braking devices are suitable for the high acceleration rate of 3 - 6 m/s^2, and there must be sufficient travel distance in both directions.

4.22 Emergency evacuation operation

Emergency evacuation operation is possible with the Unidrive SP and the Elevator Solution Software. The emergency evacuation operation can be implemented in a number of ways as follows:

1. Low voltage DC back-up operation using batteries. The low voltage DC backup operation using batteries does have limited operation due to the maximum allowed battery voltage levels. Additional external circuitry is also required as detailed further on in this section.

NOTE

Careful consideration is required when proposing to use the Low voltage DC backup operation for emergency evacuation, due to the low voltage levels used. The low voltage DC levels along with the stator resistance of the motor can result in limited torque.

WARNING

When in low voltage DC operation the Unidrive SP may NOT be able to limit the speed of a servo motor with an overhauling load.

WARNING

If a permanent magnet motor is made to rotate at high enough speed due to external torque, the DC bus of the drive and its associated wiring could rise above the low voltage DC operating level.

2. UPS backup operation is possible using a single phase UPS e.g. 230 Vac and an autotransformer. The autotransformer is required to step the UPS output voltage up to the required operating level for Unidrive SP sizes 1 to 3. Additional external circuitry is also required as detailed later in this section.
3. UPS backup operation for the larger size Unidrive SP, size 4 upwards is possible also with a single Phase UPS e.g. 230 Vac. An autotransformer is required to step the voltage up to the required operating level for the Unidrive SP. In addition a bridge rectifier is also required to allow the Unidrive SP to be powered from its DC Bus.

NOTE

Unidrive SP size 4 and upwards has an intelligent input stage that requires all three phases to be present for the drive to start-up, therefore it is not possible to operate with a single phase AC backup power supply. For single phase UPS operation, an external bridge rectifier and inrush limiting circuit allows the AC output voltage from the UPS to be rectified and connected directly to the DC bus of the Unidrive SP.

To assist with the emergency evacuation operation the Elevator Solution Software also has the following features:

- Load measurement carried out for last travel
- Direction of load detected during last travel
- UPS protection, power limiting

4.22.1 Low voltage DC back-up operation

For Unidrive SP there is an option to operate with low voltage DC, this can be carried out using external batteries. Table 4-28, provides the maximum operating voltage levels for the low voltage DC back-up operation.

Table 4-28 Low voltage DC operation levels

<table>
<tr><th rowspan="2">Drive size</th><th rowspan="2">Under voltage trip level</th><th rowspan="2">Minimum start up voltage</th><th colspan="2">Continuous operating voltage (Pr 6.46)</th><th colspan="2">Braking IGBT turn on voltage (Pr 5.05)</th><th colspan="2">Over voltage trip threshold (Pr 5.05)</th><th rowspan="2">Required current rating of low voltage DC supply</th></tr>
<tr><th>200</th><th>400
575
690</th><th>200</th><th>400
575
690</th><th>200</th><th>400
575
690</th></tr>
<tr><th>V</th><th>V</th><th>V</th><th>V</th><th>V</th><th>V</th><th>V</th><th>V</th><th>A</th></tr>
<tr><td>1</td><td rowspan="7">35</td><td rowspan="7">40</td><td>48</td><td>48</td><td>63</td><td>63</td><td>69</td><td>69</td><td rowspan="7">2 x drive output current (heavy duty current rating)</td></tr>
<tr><td>2</td><td rowspan="2">48 to 72</td><td rowspan="2">48 to 72</td><td rowspan="2">95</td><td rowspan="2">95</td><td colspan="2">104</td></tr>
<tr><td>3</td></tr>
<tr><td>4</td><td rowspan="4">N/A</td><td rowspan="4">48 to 96</td><td rowspan="4">N/A</td><td rowspan="4">127</td><td>104</td><td rowspan="4">139</td></tr>
<tr><td>5</td><td rowspan="3">N/A</td></tr>
<tr><td>6</td></tr>
<tr><td>SPMA</td></tr>
<tr><td>SPMD</td></tr>
</table>

- Minimum and maximum voltage values include ripple and noise. Ripple and noise levels must not exceed 5 %.
- Minimum start up voltage, this is the minimum voltage that is required to initially start up the drive.
- Braking IGBT turn on voltage, this is the voltage level that the drive braking IGBT will operate at.
- Over voltage trip threshold, this is the voltage level that the drive will trip O V (Over Voltage).

WARNING

The AC supply and DC supply must not be connected at the same time, seamless change over from AC to DC or DC to AC is not possible.

For Unidrive SP sizes 1 to 6, a 24 V external power supply must be connected to the 24 V external input on the control terminal of the drive. This supplies the control circuitry and may be connected permanently.

In addition for Unidrive SP4 and upwards a 24 V external power supply also needs to be connected to the 24V low voltage DC mode enable terminal of the drive. This supply should only be connected when in low voltage DC operation (this supply is in addition to the +24 V external input). For further detailed information on operation and set-up refer to the *Low voltage DC operation Installation Guide* which is available for Unidrive SP.

NOTE

Careful consideration is required when proposing to use the Low voltage DC operation for emergency evacuation operation, due to the low voltage levels used. The low voltage DC levels along with the stator resistance of the motor can result in limited torque.

Figure 4-38 System configuration diagram for Unidrive SP size 1 to 3

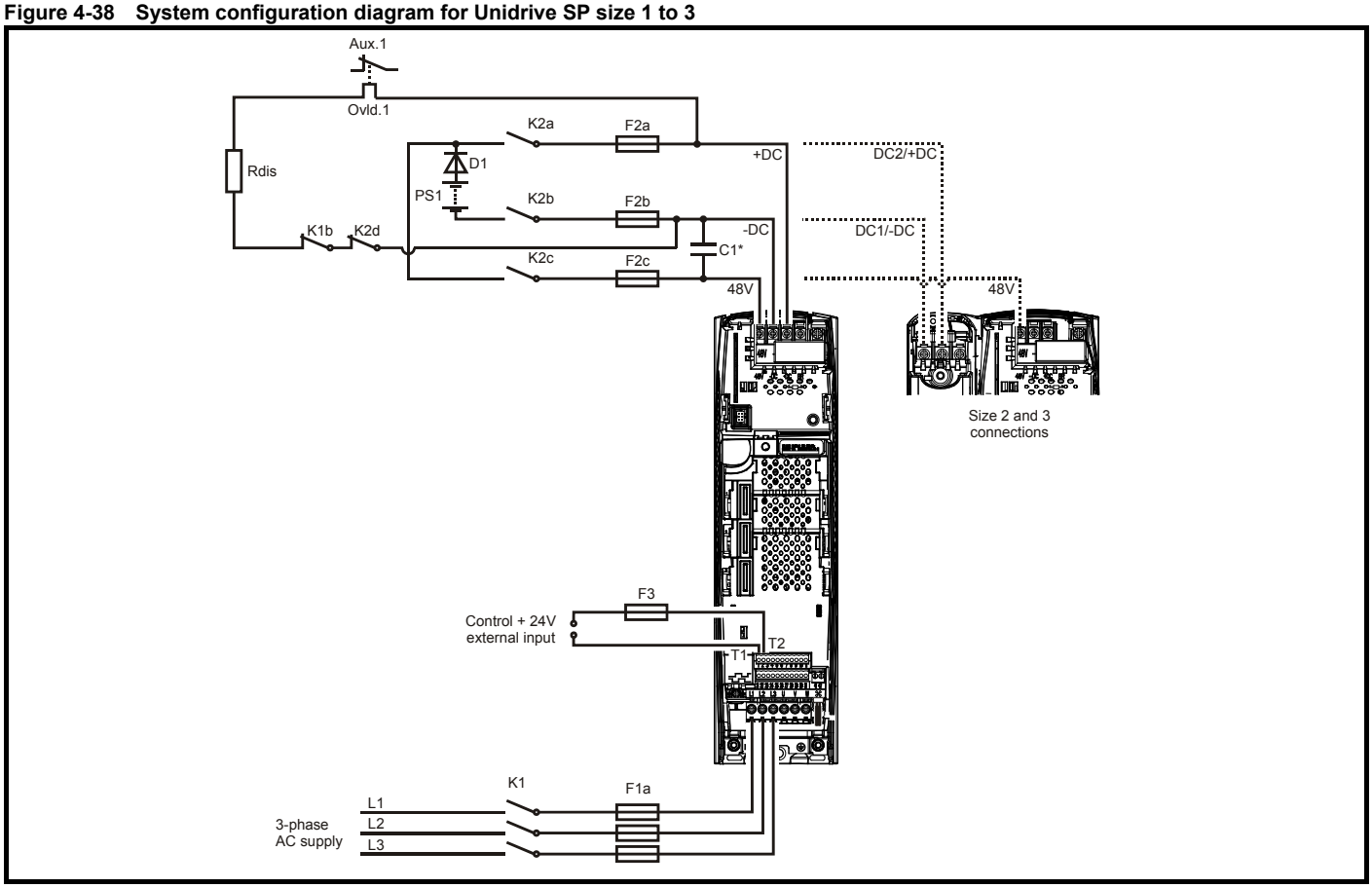

Figure 4-39 System configuration diagram for Unidrive SP size 4 to 6, SPMA/D

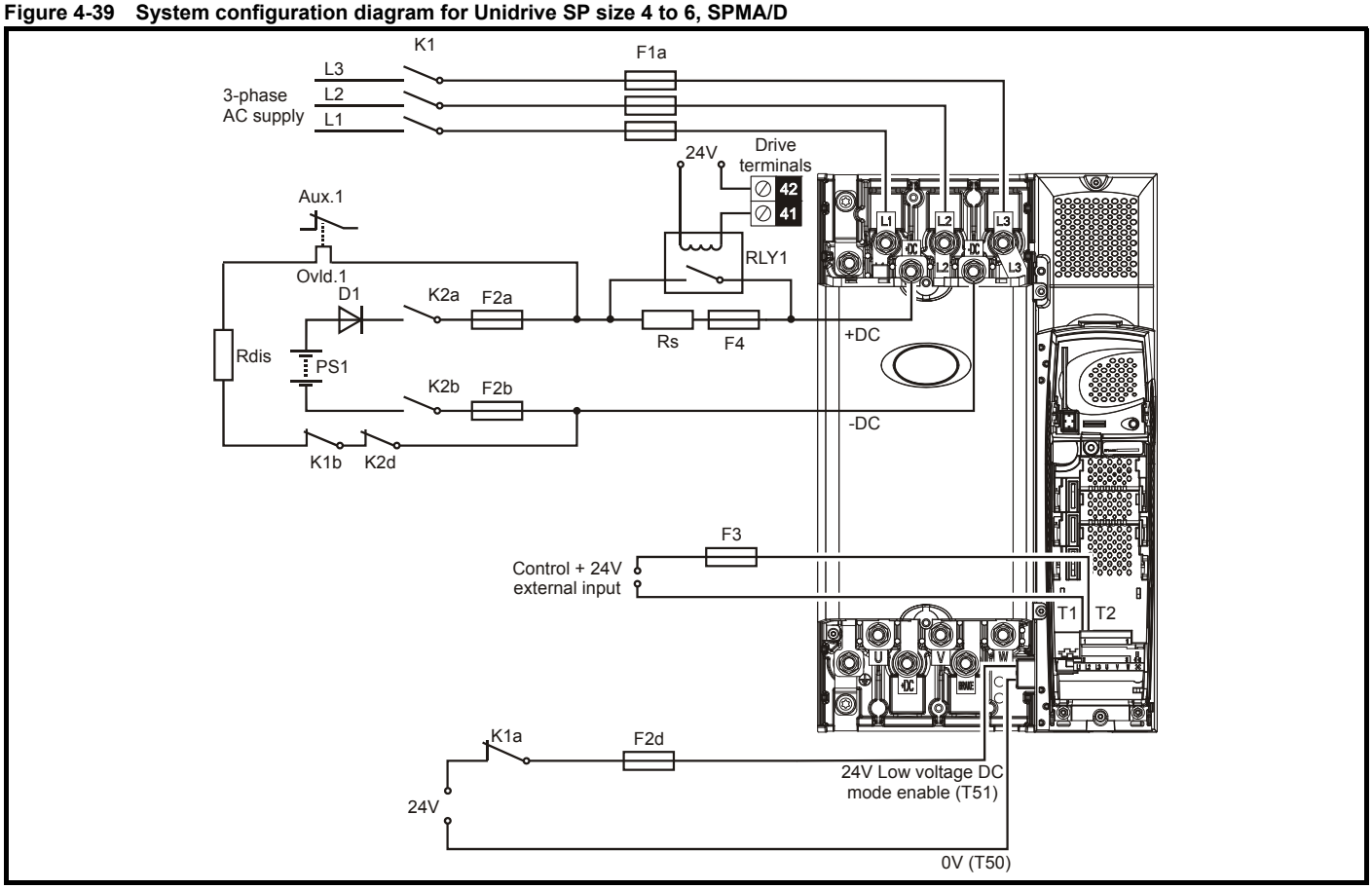

Operation with an induction motor

When operating with an induction motor the drive will start to field weaken at the point when the output voltage (based on the programmed V/F) reaches the maximum DC bus voltage of the drive can support (about 34 V based on a DC bus of 48 V). e.g. The drive would begin to field weaken the motor at around 4 Hz for a 50 Hz 400 V motor. The drive may continue to rotate the motor up to base speed. However, even with no external load (just a bare motor shaft) the motor could stall due to the reduced torque available while so far into field weakening. Be aware that reduced torque may be experienced in instances where the motor requires significant volts to magnetize. The reasons for this are listed below.

- The external low voltage DC power supply has reached it's maximum supply voltage to the drive.
- The drive has reached the maximum allowable output voltage available in this mode of operation.

WARNING

The drive can only provide rated torque at low speeds as described above. It is very important to consider this when operating with an overhauling load such as elevator applications. Even with the correct braking resistor selection, the drive may not be able to maintain control of the load if the drive goes into field weakening.

Operation with a servo motor

The speed of a servo motor is limited based on the Ke (voltage constant) value as shown in the example below. A Unidrive SP with a low voltage DC supply of 48 V running a 3000rpm servo motor having a Ke value of 98 V/Krpm.

- Calculate rpm per Volt. = **1000 rpm / 98 V = 10.2 rpm per volt**
- Calculate drive output voltage = **48 V / (√2) = 34 V**
- From the above calculations the motor speed will be limited to **10.2** x **34** = **347 rpm** (no load conditions). Under load, the maximum motor speed will be reduced.

NOTE

The calculation above gives an estimated value and does not take into account motor volt drops, load etc.

WARNING

When in low voltage DC operation the Unidrive SP may NOT be able to limit the speed of a servo motor with an overhauling load.

WARNING

If a permanent magnet motor is made to rotate at a high enough speed due to external torque, the DC bus of the drive and it’s associated wiring could rise above the low voltage DC operating level.

4.22.2 UPS back-up operation

The Unidrive SP Elevator Solution Software will allow emergency evacuation operation to be carried out using a back-up AC power supply system. Unidrive SP back-up AC power supply UPS operation is restricted based upon the drive size being used as detailed following:

SP0xxx to SP3xxx

Drives in these ranges have a diode rectifier input stage with no direct monitoring of each supply input phase. Mains loss and phase loss detection is derived from the DC Bus voltage only. Therefore a single phase UPS can be used with these drives, provided there is not excessive DC bus ripple and operation is not required at full load.

SP4xxx and upwards

Drives in these ranges have an active rectifier input stage. Mains loss and phase loss detection is derived from the DC bus voltage. However the rectifier stage requires that all three phases of the supply be present in order for the drive to start-up, therefore a single phase UPS cannot be used to supply these drives.

Figure 4-40 on page 71 shows a typical UPS system that could be used for a Unidrive SP size 0 to size 3. This system uses a single phase UPS rated at 240 Vac supplying a 400 V drive, in order to achieve the correct operating voltage an autotransformer is used to step this up to 480 Vac.

Figure 4-41 on page 71 shows a typical UPS system that could be used for a Unidrive SP size 4 and up. This system uses a single phase UPS rated at 240 Vac supplying a 400 V drive. In order to achieve the correct operating voltage, an autotransformer is used to step this up to 480 Vac along with an external rectifier and inrush limiting circuit to provide the drive with the required DC Bus voltage.

Figure 4-40 Single phase back-up AC power supply system

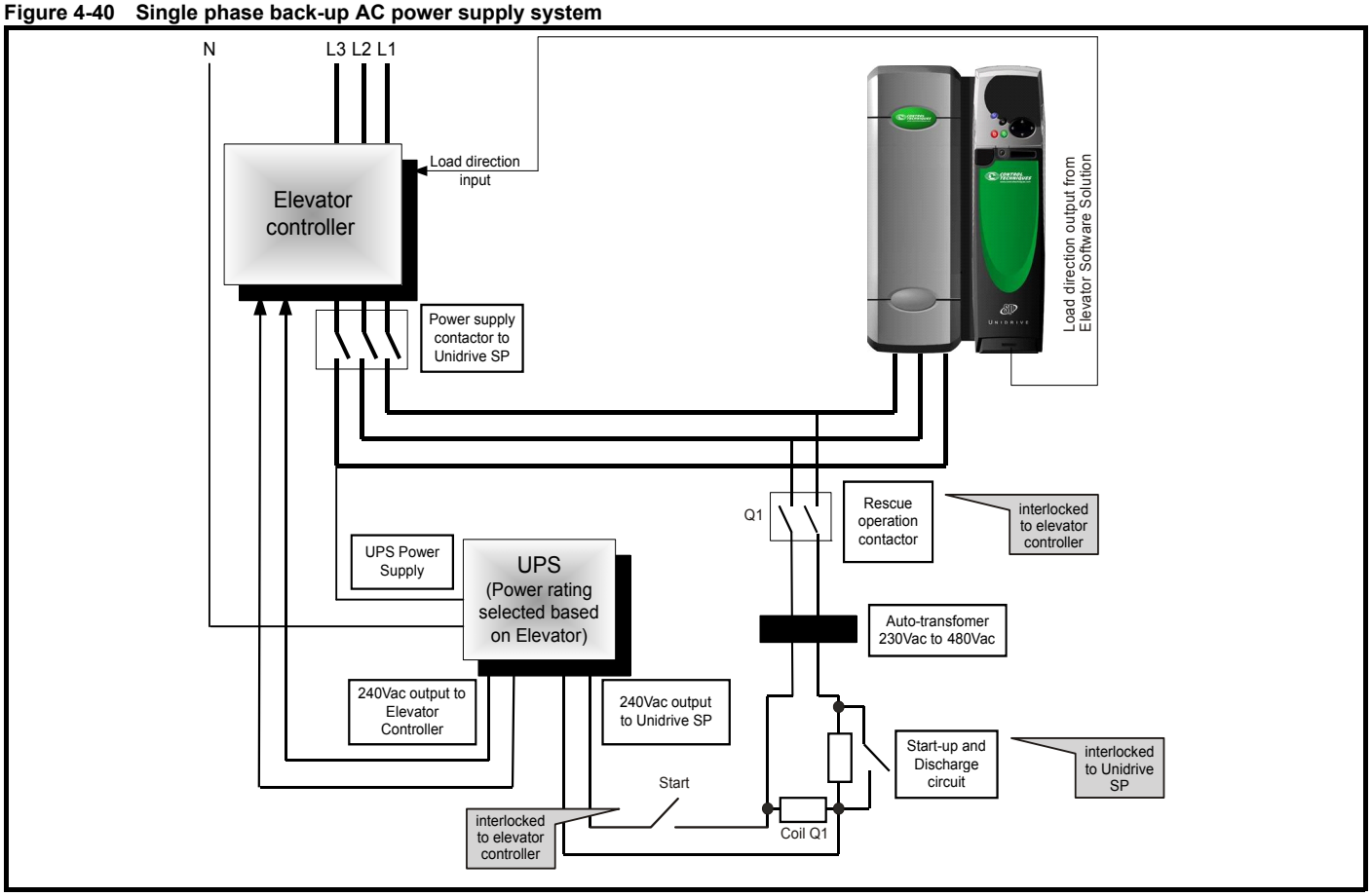

Figure 4-41 Single phase back-up AC power supply system - DC output

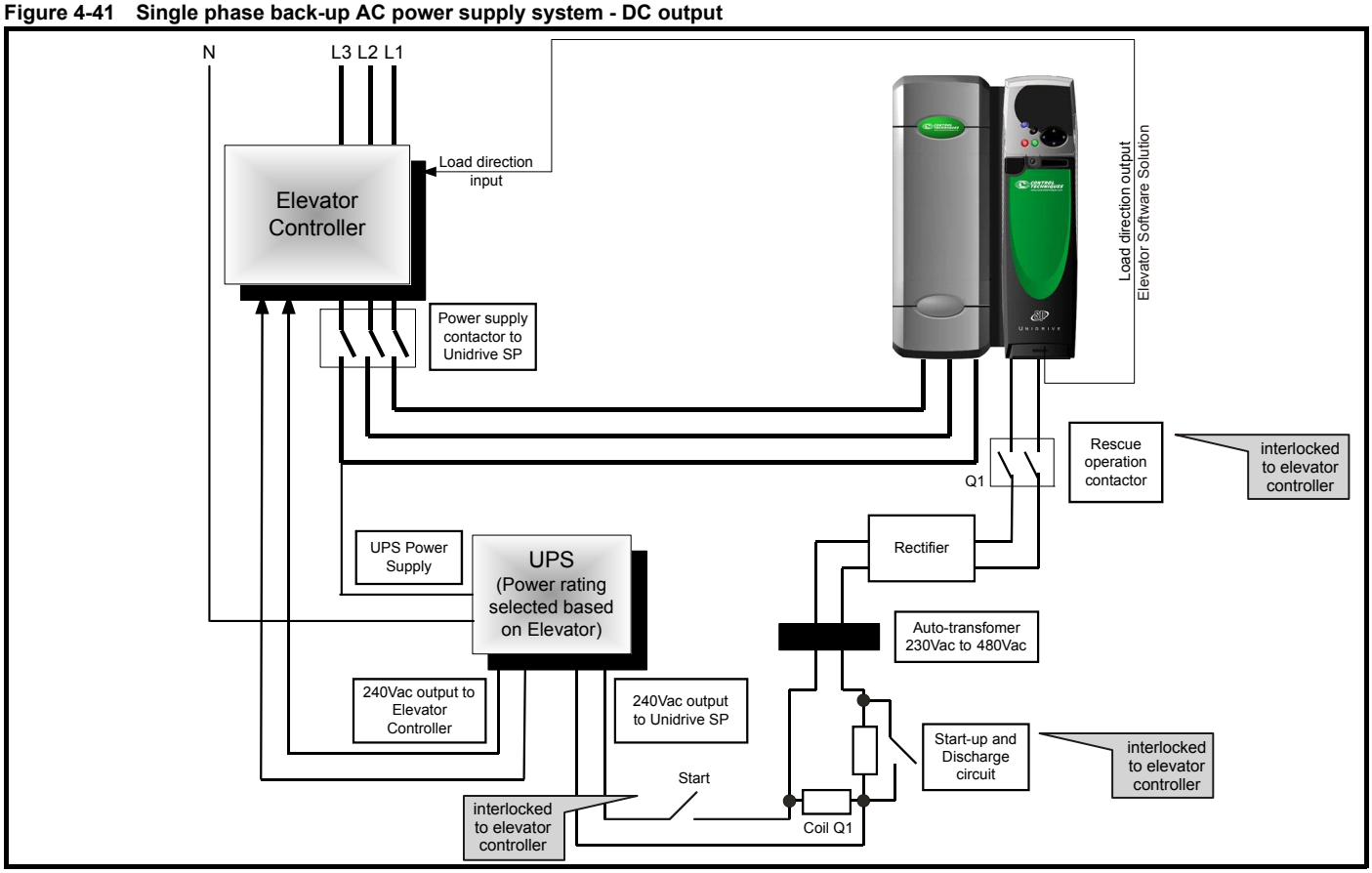

4.22.3 Elevator Solution Software UPS protection

In order to prevent the UPS system from being overloaded during operation the Elevator Solution Software has two features which limit the current output from the drive and also limit the elevator power demand from the UPS system.

The UPS protection is enabled and disabled by the elevator control, this activates a digital input on the Unidrive SP which is routed to the elevator software Pr **19.38**.

The UPS protection requires the user to enter the UPS power rating into Pr **20.15** UPS maximum power control set point. The protection uses this value as the maximum allowed power and compares this with the drive output power in Pr **5.03**. If the demanded power exceeds the value in Pr **20.15**, the current speed selection is removed and set to zero, the final speed set point in Pr **19.01** becomes 0.

Figure 4-42 UPS protection - Elevator Solution Software power control

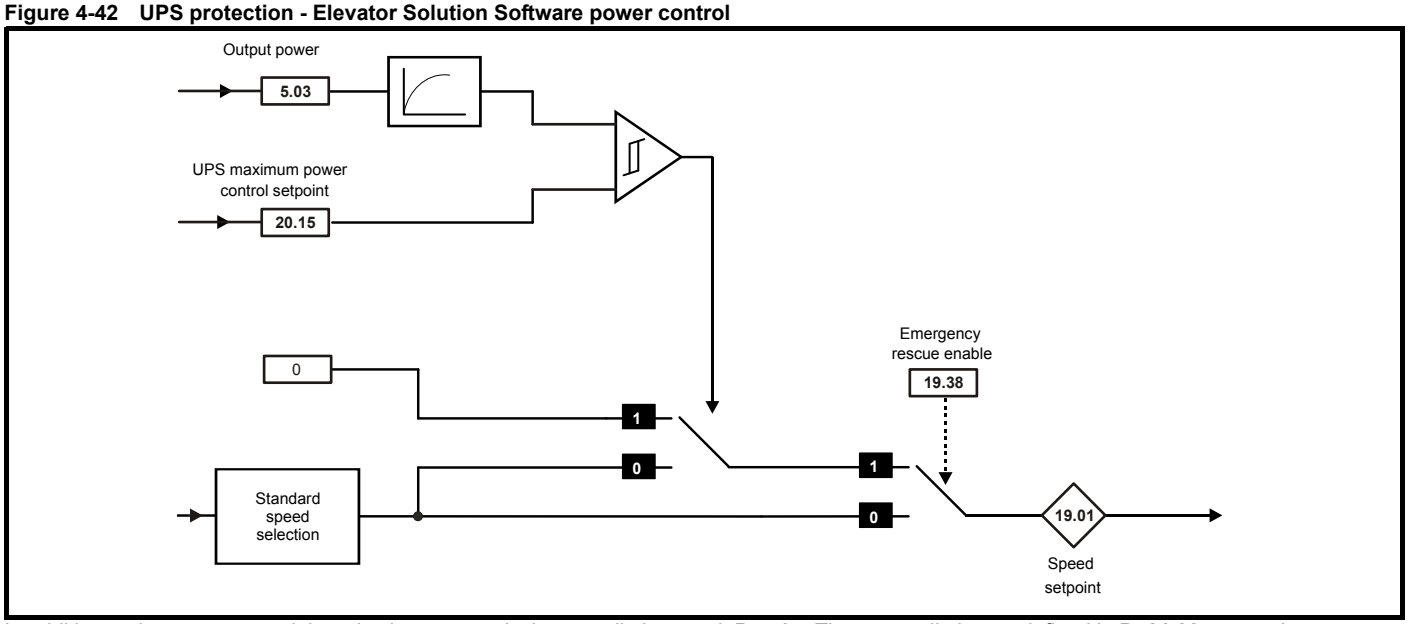

In addition to the power control there is also symmetrical current limit control, Pr **4.07**. The current limits are defined in Pr **21.28** evacuation current limit full load, and Pr **21.29** evacuation current limit no load. This feature is also enabled and disabled through Pr **19.38** and active at the same time as the maximum power control.

Before the transition to the emergency evacuation operation the symmetrical current limit in Pr **4.07** during normal operation is stored into memory. On activation of the emergency evacuation operation by setting Pr **19.38** = 1 the evacuation current limits become active, Pr **21.28** and Pr **21.29** based on the DC bus voltage level as shown in Figure 4-43.

Figure 4-43 UPS protection - Elevator Solution Software current limit control

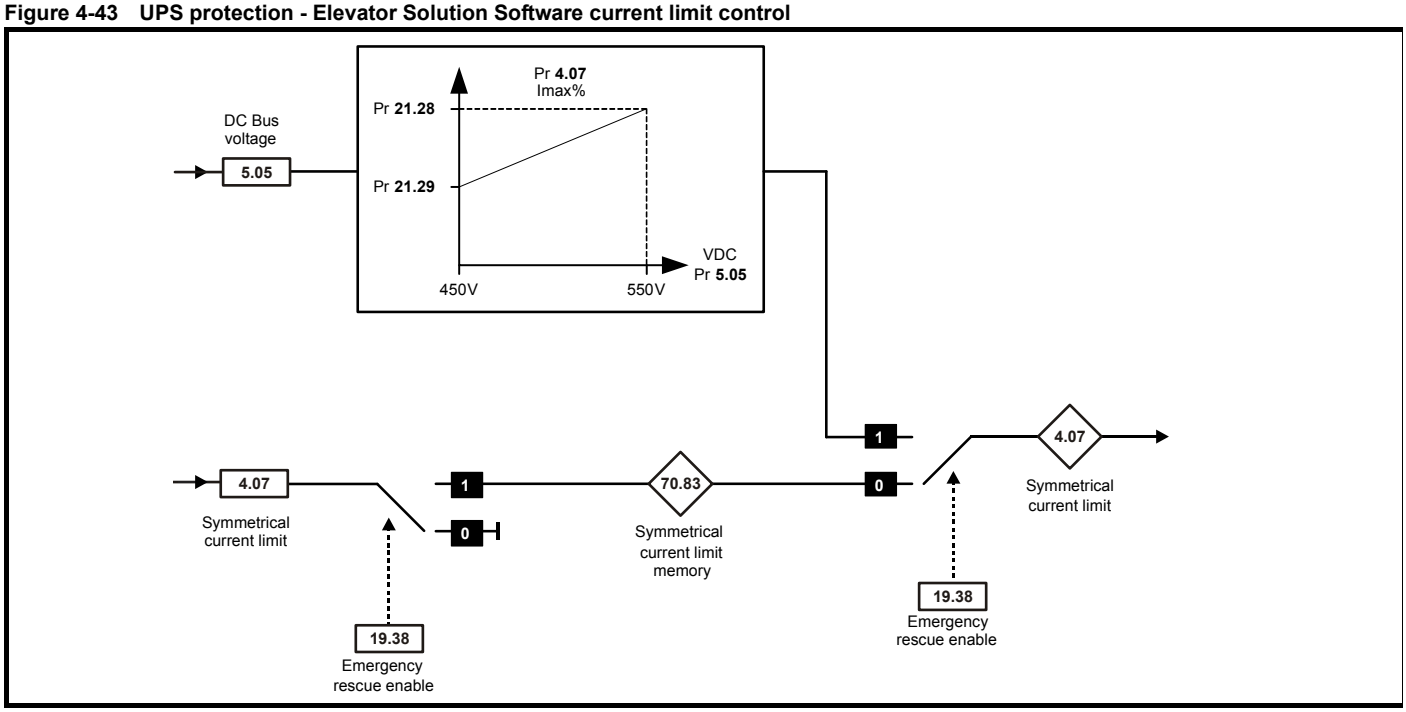

In order for the emergency evacuation control to operate correctly the following sequence should be followed:

- Drive is operating on 3ph supply, Pr **19.38** = 0, Pr **4.07** = normal setting.
- 3 ph power supply is lost
- Digital input to drive, routed to Pr **19.38** from elevator controller becomes active to show evacuation operation is active.
- Drive is powered up from UPS
- Software will modify Pr **4.07** depending on the DC bus voltage level and the settings of Pr **21.28** and Pr **21.29** as shown in Figure 4-43 on page 72.
- Evacuation is completed.
- Drive is powered down.
- Digital input to drive, routed to Pr **19.38** from elevator controller is removed to show evacuation operation is completed.
- UPS is disconnected.
- Drive is powered up from 3 ph supply, Pr **19.38** = 0.
- Elevator Solution Software loads previous normal operation current limit, Pr **4.07** from stored value.

NOTE

Interlocks should be in place to ensure correct sequencing of the startup and discharge circuits along with the emergency evacuation control.

4.23 Longlife control

The Unidrive SP and Elevator Solution Software uses the drives thermal model to monitor the power stage temperatures for the longlife control. The monitored power stage temperatures are then used by the Elevator Solution Software to optimize the control and prevent excessive power stage temperature. In addition to the maximum power stage temperature, the change of power stage temperature (ΔT) during operation is also important for the lifetime of the power electronics.

This control method eliminates thermal distortion due to excessive power stage temperatures.

The new longlife control function introduced in the Elevator Solution Software provides an extended lifetime of the power electronics independent from the setting of the switching frequency and load. This function is enabled as default by Pr **70.74** = 1 and ensures a maximum power stage ΔT temperature change of 40 °C is not exceeded.

A maximum power stage ΔT temperature change of 40 °C ensures a product lifetime of 10 years for a lift with 500 travels per day and 200 days per year.

With some systems, where the drive size selected results in the drive operating close to its maximum rating for extended periods, there may be a short increase in the acoustic noise at low speeds. If the low speed acoustic noise is too high, the temperature threshold in Pr **70.76** may be increased from the default 40 °C for elevators with low travels per day. It should be noted that the expected minimum travel count will be halved if the temperature change is increased by 10 °C.

The actual temperature change during the last travel can be viewed in Pr **70.70**, furthermore Pr **70.71** shows the number of travels and Pr **70.73** the average temperature change during these travels which can be used to estimate the expected lifetime.

5 I/O configuration

5.1 Unidrive SP control terminals

The control terminals on the Unidrive SP drive are user programmable except for control terminal T31, which has a fixed function referred to as the SAFE TORQUE OFF input. By default, the control terminals are set-up as follows with the Elevator Solution Software.

The Unidrive SP elevator drive in default uses positive logic for all control terminals. The Unidrive SP elevator drive can however be set-up to operate in negative logic through Pr **8.29**, Positive logic select.

NOTE

When configuring the Unidrive SP elevator drive for negative logic operation the SAFE TORQUE OFF input will remain in positive logic.

Figure 5-1 Default control terminals

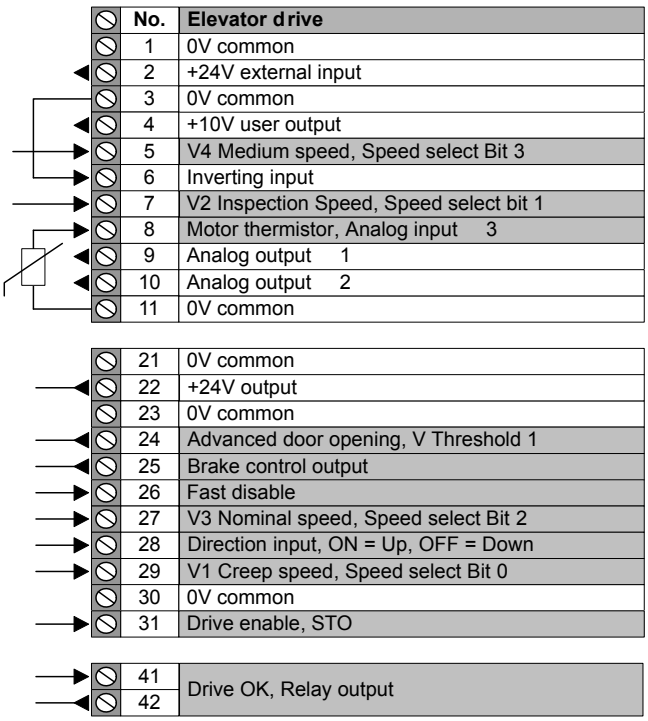

The configurations of the control terminals for the Unidrive SP elevator drive are controlled through source and destination parameters that are set-up by default with the Elevator Solution Software. The default control terminals as shown above can be re-assigned by the user through the following parameters. Control terminal inputs on the Unidrive SP elevator drive can also be manipulated e.g. inverted, scaling applied using additional parameters as follows:

NOTE

A speed selection filter is available in Pr **70.87** with a default value of 0 ms. This can be adjusted / implemented to overcome spurious speed selections.

Table 5-1 Default speed selection

Control Terminal		I/O set-up	Source Parameter	I/O Status	I/O Invert
Function	**No.**				
V1 Creep speed	T29	Input	Pr **8.26** = 18.36	Pr **8.06**	Pr **8.16**
V2 Inspection speed	T26		Pr **8.23** = 6.29	Pr **8.03**	Pr **8.13**
V3 Nominal speed	T27		Pr **8.24** = 18.38	Pr **8.04**	Pr **8.14**
V4 Medium speed 1	T5		Pr **7.10** = 18.39	Pr **7.01**	Pr **7.09**
V5 Relevelling speed	T7		Pr **7.14** = 18.37	Pr **7.02**	Pr **7.13**
Advanced door opening	T24	Output	Pr **8.21** = 18.32	Pr **8.01**	Pr **8.11**
Brake control output	T25		Pr **8.22** = 18.31	Pr **8.02**	Pr **8.12**
Drive OK relay	T41-T42		Pr **8.27** = 10.01	Pr **8.07**	Pr **8.17**
Direction input	T28	Input	Pr **8.25** = 18.44	Pr **8.05**	Pr **8.15**
Drive enable	T31		N/A	Pr **8.09**	N/A

As detailed in the above section, the Unidrive SP elevator drive control terminals can be re-assigned to additional features available in the Elevator Solution Software.

Table 5-2 provides details of the default spare control terminals available on the drive:

Table 5-2 Additional I/O

Control Terminal		I/O set-up	Source parameter	I/O status	I/O invert
Function	**No.**				
Motor thermistor	T8	Input	Pr **7.18** = 0.00	Pr **7.03**	Pr **7.17**
Analog output 1	T9	Output	Pr **7.19** = 3.02	N/A	
Analog output 2	T10		Pr **7.22** = 4.02		
+24V output	T22		Pr **8.28** = 0.00	Pr **8.08**	Pr **8.18**

Additional functions that can be assigned to the control terminals of the Unidrive SP Elevator drive are as follows:

Table 5-3 Additional functions

Additional functions		Information
Motor contactor control	Output	Pr **19.32** source for output
Floor sensor correction	Input	Pr **20.14** destination for floor sensor input
Load cell compensation		Pr 4.08 destination for load cell via analog input 2
Second direction		Pr **8.24** = 19.44 second direction input to T27
Short distance landing		Pr **18.20** elevator controller input to drive
Direct-to-floor Stop		Pr **20.13** floor sensor input to drive
Brake contact monitoring		Pr **19.34**, Pr **19.36** brake contact feedback monitoring
Motor contact monitoring		Pr **19.33** enables monitoring of the output motor contactors

WARNING

If the safety function of the SAFE TORQUE OFF input is required, then there **must not** be a direct connection between the SAFE TORQUE OFF input (T31) and any other digital I/O on the drive. If the safety function of the SAFE TORQUE OFF input and the fast disable function is required, then the drive should be given two separate independent enable signals. A safety related enable from a safe source connected to the SAFE TORQUE OFF input on the drive. A second enable connected to the digital I/O on the drive selected for the fast disable function. The circuit must be arranged so that a fault which causes the fast input to be forced high cannot cause the SAFE TORQUE OFF input to be forced high, including the case where a component such as a blocking diode has failed.

5.1.1 Direction inputs

The direction input(s) can be configured as detailed following. The default configuration for the Elevator Solution Software is a single direction input on control terminal T28 of the drive with On = UP direction and OFF = DOWN direction (Pr **8.25** = 18.44 and Pr **19.26** = 0). For configuration of dual direction inputs (Pr **19.26** >0) the direction inputs on the drive are automatically setup within the software to use T28 and T27 this configuration cannot be changed. (Pr **8.25** = 18.44, Pr **8.24 =** 19.44, Pr **19.26** >0).

Pr **19.26** allows the user to define the number of direction inputs on the control terminals of the drive along with the interface type e.g. binary or priority speed selection as shown in Table 5-4.

Table 5-4 Control terminal direction inputs

Pr **19.26 = -1**	**Terminal control, Single direction, Priority "1 of n" speed selection**	
	T28	Pr **18.44** = OFF (0) clockwise rotation demanded
	T28	Pr **18.44** = On (1) counter clockwise rotation demanded
Pr **19.26 = 0**	**Terminal control, Single direction, Binary speed selection**	
	T28	Pr **18.44** = OFF (0) clockwise rotation demanded
	T28	Pr **18.44** = On (1) counter clockwise rotation demanded
Pr **19.26 = 1**	**Terminal control, Dual direction, Binary speed selection**	
	T28	Pr **18.44** = OFF (0) no counter clockwise rotation demanded
	T28	Pr **18.44** = On (1) counter clockwise rotation demanded.
	T27	Pr **19.44** = OFF (0) no clockwise rotation demand
	T27	Pr **19.44** = On (1) clockwise rotation demanded.
Pr **19.26 = 2**	**Terminal control, Dual direction, Priority "1 of n" speed selection**	
	T28	Pr **18.44** = OFF (0) no counter clockwise rotation demanded
	T28	Pr **18.44** = On (1) counter clockwise rotation demanded.
	T27	Pr **19.44** = OFF (0) no clockwise rotation demand
	T27	Pr **19.44** = On (1) clockwise rotation demanded.

Pr **18.45** is the invert direction this will invert the direction but will not affect Pr **18.44** display. For a change in the control interface to become active when Pr **19.26** is set > 0 the following procedure must be followed:

- Store the parameters in the drive, Pr **x.00** = 1000 + Reset
- Cycle the drive power so that the keypad display = OFF then turn On again

For a change in the control interface to become active when Pr **19.26** is set to 0, the following procedure must be followed:

- Set Pr **8.24** = 18.38 speed select Bit 2 (default), or the desired function
- Store the parameters in drive, Pr **x.00** = 1000 + Reset
- Cycle the drive power so that the keypad display = OFF then turn On again

5.2 Motor thermistor input

5.2.1 Unidrive SP software control

By default, analog input 3 on the Unidrive SP control terminal T8 is set-up for the motor thermistor input. Analog input 3 is the only control terminal input on the Unidrive SP that is available as a thermistor input. Analog input 3 when used as thermistor input, is also directly linked to the thermistor connection on the 15 way D type encoder port, pins 14 and 15 of the Unidrive SP. Therefore if operating with a CT Dynamics PM motor the thermistor could be connected to the drive via the 15 way D type encoder port and therefore analog input 3 cannot be used for any other function. The thermistor related settings associated with analog input 3 are now used for the thermistor input on the 15 way D type encoder port. Analog input 3 can be set-up for different functions with Pr **7.15** when operating as a thermistor input as shown in Table 5-5.

Table 5-5 Thermistor input details

Parameter value	Parameter string	Mode	Comments
0	0-20	0-20 mA	
1	20-0	20-0 mA	
2	4-20.tr	4-20 mA with trip on loss	Trip if I <3 mA
3	20-4.tr	20-4 mA with trip on loss	Trip if I <3 mA
4	4-20	4-20 mA with no trip on loss	
5	20-4	20-4 mA with no trip on loss	0.0% if I <4 mA
6	VOLt	Voltage mode	
7	th.SC	Thermistor with short circuit protection	TH trip if R >3k3 TH reset if R <1k8 THS trip if R <50R
8	th	Thermistor without short circuit protection	TH trip if R >3k3 TH trip if R <1k8
9	th.diSp	Thermistor display with controlled trip	

For operating modes Pr **7.15** = th.SC and Pr **7.15** = th as soon as a overtemperature condition is detected the drive will trip whenever it is stationary or running.

For operating mode Pr **7.15** = th.diSp the temperature of the motor from the thermistor input as a resistance value is displayed in Pr **7.03** as a %, for example if the thermistor input is at 3.3 kΩ, Pr **7.03** will show a value of 33.0 %.

For this operating mode the elevator will start every time and operate as long as the thermistor input is below 3.3 kΩ, if the thermistor input is above 3.3 kΩ a th trip is generated and the elevator cannot be started. If the temperature rises and the thermistor input exceeds 3.3 kΩ during operation the elevator will complete the travel and then generate the th trip.

Following a th trip the motor must cool to a level where thermistor input Pr **7.03** drops below the 1.8 kΩ level allowing the th trip to be reset. The reset for the trip can be carried out directly on the keypad of the drive or by using a digital input routed to Pr **10.33**.

The thermistor overtemperature or fault can be output to the elevator controller using a digital output with the source set-up as Pr **19.35**, thermistor status.

5.2.2 Elevator Solution Software

An extension of the motor thermistor protection is available with Elevator Solution Software V01.23.00 which uses the programmable motor thermistor threshold in Pr **71.57** and allows operation with a wider range of motor thermistors. The motor thermistor control on the drive Pr **7.15** = 7 or 8 restricts use for thermistors to be in the range of TH trip if R > 3k3 Ω, the Elevator Solution Software allows the threshold to be extended using Pr **71.57** to a user defined trip level.

The extended motor thermistor protection uses the threshold in Pr **71.57** which is set to 33 % at default as with the standard drive. The new programmable motor thermistor control is enabled with Pr **7.15** = 9, thus disabling the standard motor thermistor control within the drive (Pr **7.15** = 7 or 8).

For this operating mode from default (Pr **71.57** = 33 = 3.3 k Ω) the elevator will start every time and operate as long as the thermistor input is below 3.3 kΩ. If the thermistor input is above 3.3 kΩ a th trip is generated and the elevator cannot be started. If the temperature rises and the thermistor input exceeds 3.3 kΩ during operation the elevator will complete the travel and then generate the th trip.

5.3 Speed selection

The Elevator Solution Software on the Unidrive SP elevator drive can be configured for either binary speed selection or priority speed selection. The default setting for the Elevator Solution software uses binary speed selection.

Pr **18.42** is used to configure the required speed selection.
Binary speed selection Pr **18.42** = OFF **Default**
Priority speed selection Pr **18.42** = On

Binary speed selection allows up to sixteen speeds to be selected by default on the Unidrive SP elevator drive. Priority speed selection allows up to six speeds, **V1** to **V6** to be selected.
The elevator controller will determine the required speed selection.

Table 5-6 Binary speed selection

Description	Binary speed selection				Preset speed	Display
	Bit 0	Bit 1	Bit 2	Bit 3	Set up parameter	Pr 18.10 =
	T.29	T.26	T.27	T.5		
V0 Zero speed	0	0	0	0		**18.10**
V1 Creep speed	1				F**24** Pr **18.11**	**18.11**
V2 Inspection speed	0	1			F**25** Pr **18.12**	**18.12**
V3 Nominal speed	1				F**26** Pr **18.13**	**18.13**
V4 Medium speed 1	0	0	1		F**27** Pr **18.14**	**18.14**
V5 Relevelling speed	1				F**28** Pr **18.15**	**18.15**
V6 Medium speed 2	0	1			F**29** Pr **18.16**	**18.16**
V7 Additional speed 1	1				F**30** Pr **18.17**	**18.17**
V8 Additional speed 2	0	0	0	1	Pr **20.22**	**20.22**
V9 Additional speed 3	1				Pr **20.23**	**20.23**
V10 Additional speed 4	0	1			Pr **20.24**	**20.24**
V11 Additional speed 4	1				Pr **71.70**	**71.70**
V12 Additional speed 4	0	0	1		Pr **71.71**	**71.71**
V13 Additional speed 4	1				Pr **71.72**	**71.72**
V14 Additional speed 4	0	1			Pr **71.73**	**71.73**
V15 Additional speed 4	1				Pr **71.74**	**71.74**

Table 5-7 Priority speed selection

Description	Binary speed selection						Preset speed	Display
	Bit 0	Bit 1	Bit 2	Bit 3	Bit 4	Bit 5	Set up parameter	Pr 18.10 =
	T.29	T.26	T.27	T.5	T.7	T.8		
V0 Zero speed	0	0	0	0	0	0		**18.10**
V1 Creep speed	1						F**24** Pr **18.11**	**18.11**
V2 Inspection speed		1					F**25** Pr **18.12**	**18.12**
V3 Nominal speed			1				F**26** Pr **18.13**	**18.13**
V4 Medium speed 1				1			F**27** Pr **18.14**	**18.14**
V5 Relevelling speed					1		F**28** Pr **18.15**	**18.15**
V6 Medium speed 2							F**29** Pr **18.16**	**18.16**

NOTE
The creep speed parameter by default is parameter **F24**, Pr **18.11**. To change the parameter, set the new creep speed parameter number in Pr **20.12**.

5.4 Control terminal status

The status of each of the control terminals on the Unidrive SP elevator drive can be monitored from a parameter on the keypad as detailed following and be used for diagnostics and troubleshooting. Each control terminal has a status bit these are grouped into two parameters Pr **18.04** and Pr **18.05**.

Figure 5-2 Control terminal status

Drive Parameter	Bit x	No.	Elevator Drive
Pr **18.05**	Bit 0	29	V1 Creep speed, Speed select Bit 0
	Bit 1	26	V2 Inspection speed, Speed select Bit 1
	Bit 2	27	V3 Nominal speed, Speed select Bit 2
	Bit 3	5	V4 Medium speed, Speed select Bit 3
	Bit 4	7	V5 Re-levelling speed, Speed select Bit 4
Pr **18.04**	Bit 0	24	Advanced door opening, V Threshold 1
	Bit 1	25	Brake control output
	Bit 2	41, 42	Drive OK, Relay output
	Bit 3	28	Direction input, ON = Up, OFF = Down
	Bit 4	31	Drive enable, STO

5.5 Logic diagrams

Figure 5-3 Digital I/O

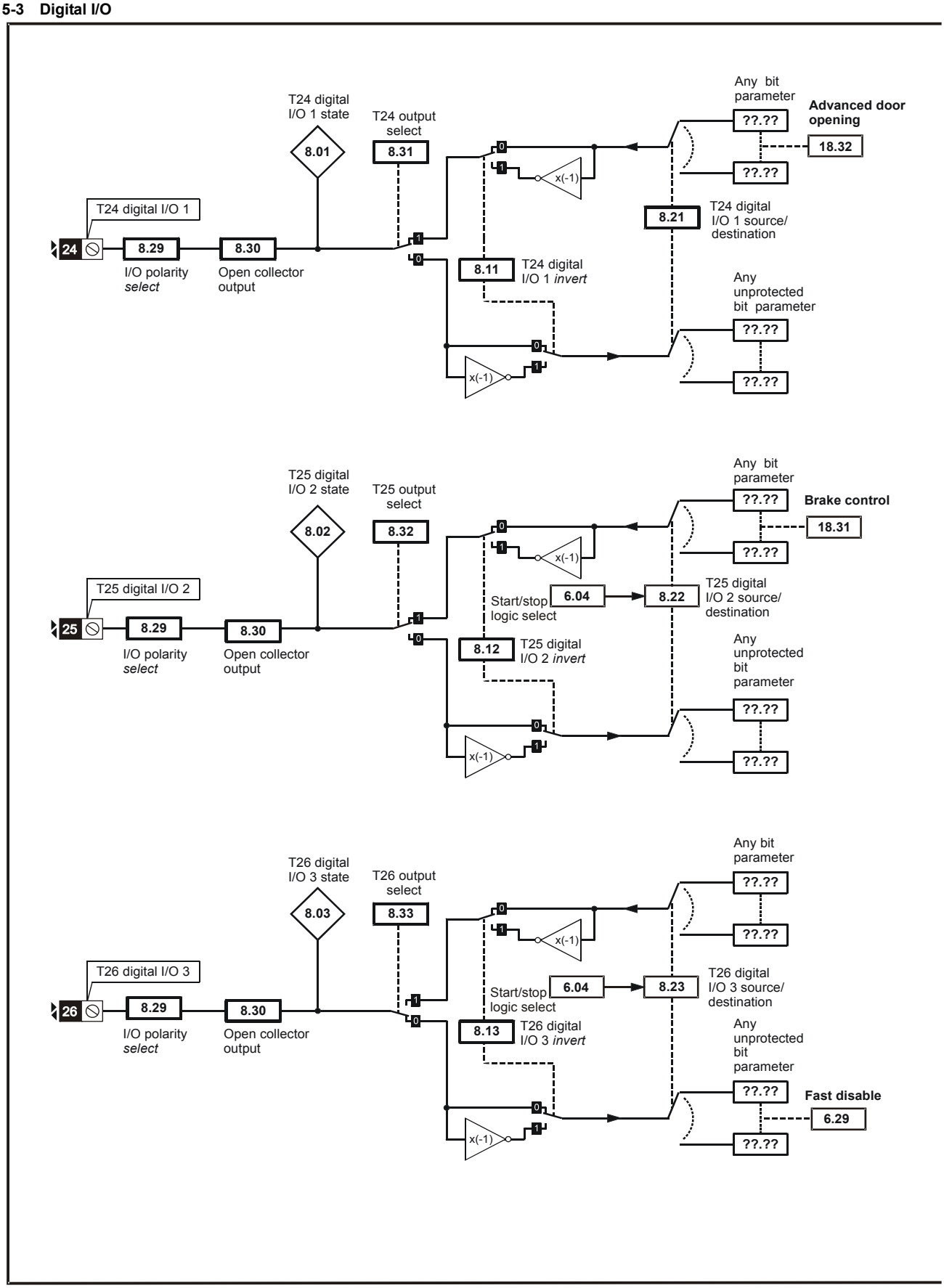

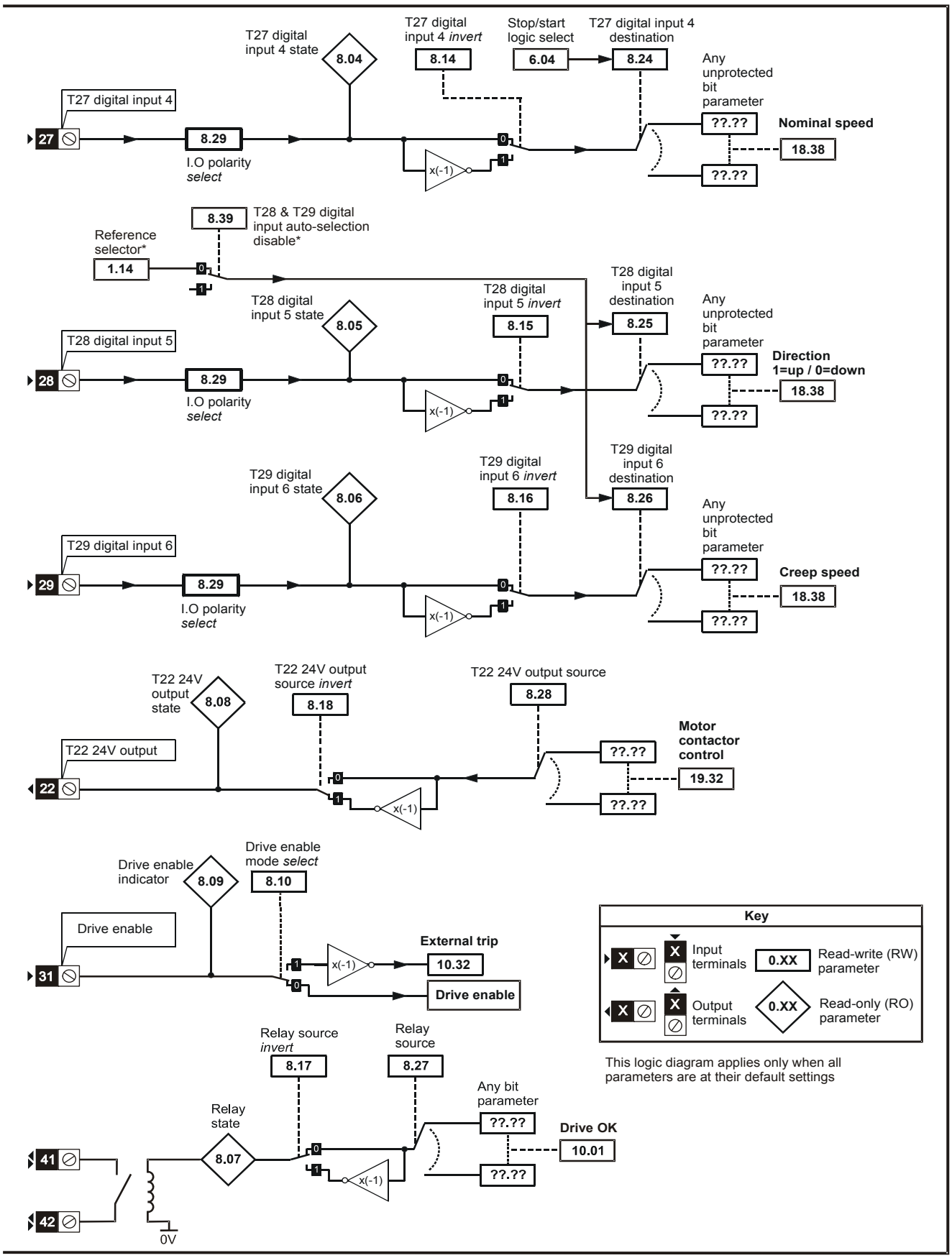
T27 digital input 4
27
8.29
I.O polarity select
T27 digital input 4 state
8.04
T27 digital input 4 invert
8.14
Stop/start logic select
6.04
T27 digital input 4 destination
8.24
Any unprotected bit parameter
??.??
??.??
Nominal speed
18.38
x(-1)
8.39
T28 & T29 digital input auto-selection disable*
Reference selector*
1.14
T28 digital input 5
28
8.29
I.O polarity select
T28 digital input 5 state
8.05
T28 digital input 5 invert
8.15
T28 digital input 5 destination
8.25
Any unprotected bit parameter
??.??
??.??
Direction 1=up / 0=down
18.38
x(-1)
T29 digital input 6
29
8.29
I.O polarity select
T29 digital input 6 state
8.06
T29 digital input 6 invert
8.16
T29 digital input 6 destination
8.26
Any unprotected bit parameter
??.??
??.??
Creep speed
18.38
x(-1)
T22 24V output
22
T22 24V output state
8.08
T22 24V output source invert
8.18
T22 24V output source
8.28
Motor contactor control
??.??
??.??
19.32
x(-1)
Drive enable
31
Drive enable indicator
8.09
Drive enable mode select
8.10
x(-1)
External trip
10.32
Drive enable
Key
Input terminals
0.XX
Read-write (RW) parameter
Output terminals
0.XX
Read-only (RO) parameter
This logic diagram applies only when all parameters are at their default settings
Relay source invert
8.17
Relay source
8.27
Relay state
8.07
Any bit parameter
??.??
??.??
Drive OK
10.01
x(-1)
41
42
0V

Figure 5-4 Analog I/O

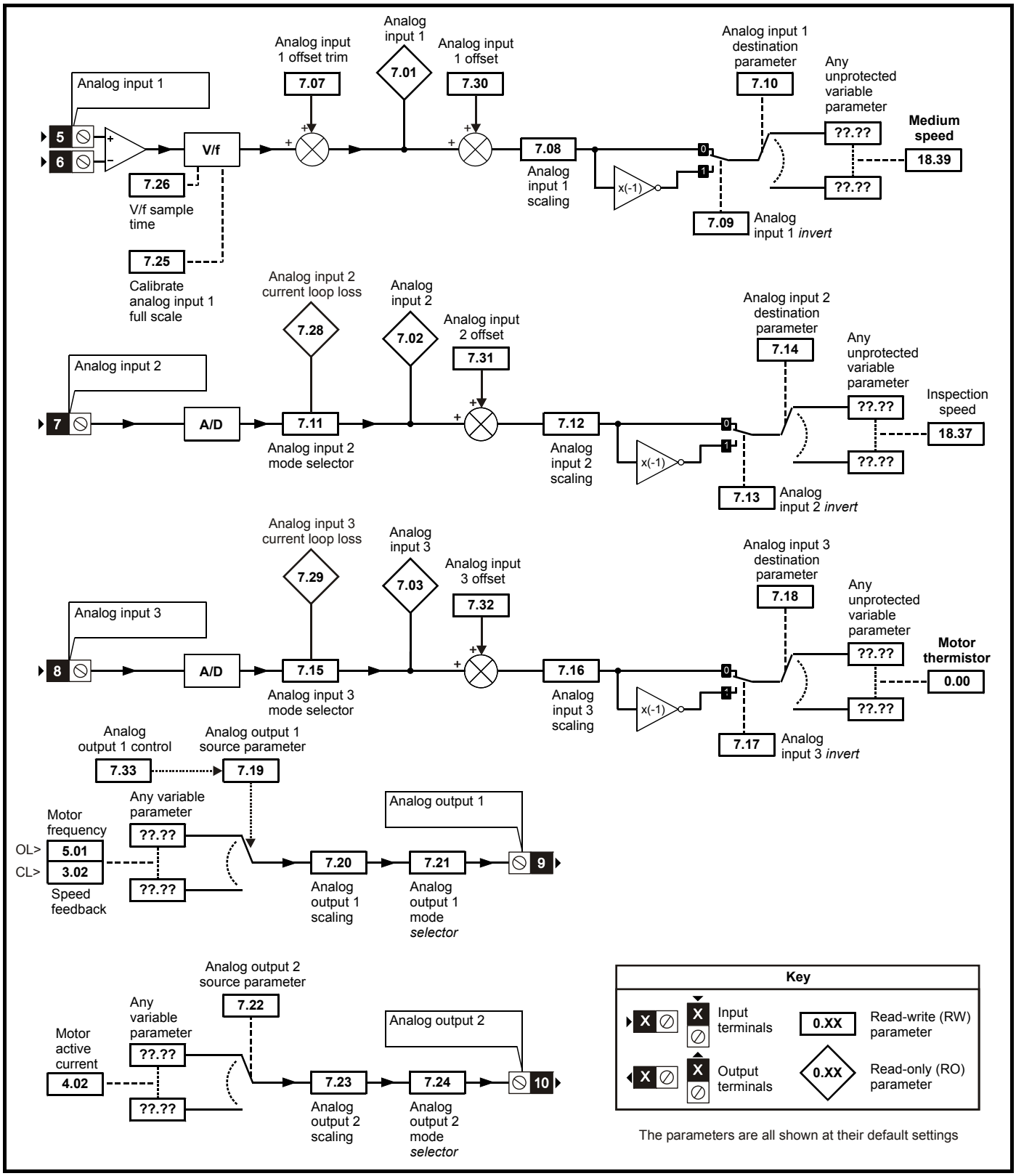

6 Basic operation

This chapter introduces the user interfaces, menu structure and security level of the drive.

6.1 Understanding the display

There are two types of keypad available for the Unidrive SP, LED and LCD. The SM-Keypad and SP0-Keypad have an LED display, and the SM-Keypad Plus has an LCD display. The SP0-Keypad can only be installed to size 0, and the SM-Keypad can only be installed to size 1 and upwards. The SM-Keypad Plus can either be installed to the size 1 and upwards, or it can be remotely mounted on an enclosure door.

6.1.1 SM-Keypad/SP0-Keypad (LED)

The display consists of two horizontal rows of 7 segment LED displays. The upper display shows the drive status or the current menu and parameter number being viewed.
The lower display shows the parameter value or the specific trip type.

Figure 6-1 SM-Keypad

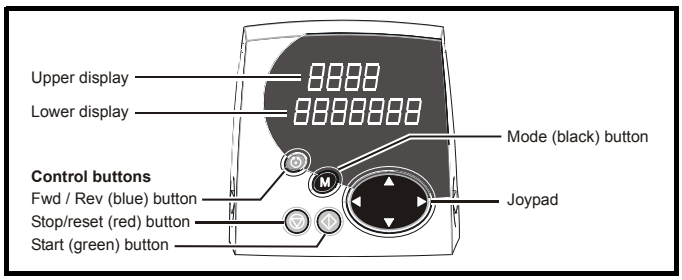

6.1.2 SM-Keypad Plus (LCD)

The display consists of three lines of text.
The top line shows the drive status or the current menu and parameter number being viewed on the left, and the parameter value or the specific trip type on the right.
The lower two lines show the parameter name or the help text.

Figure 6-2 SM-Keypad Plus

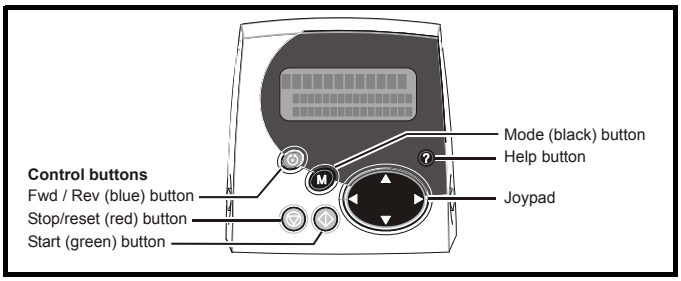

Figure 6-3 SP0-Keypad

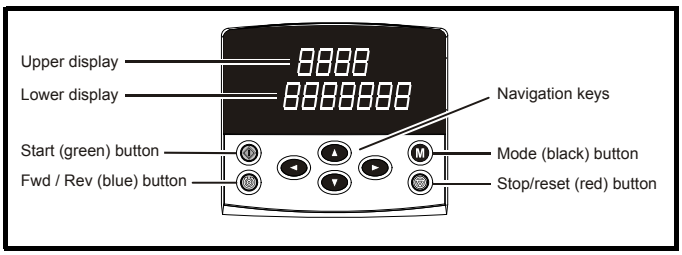

NOTE

The red stop button is also used to reset the drive.

The SM-Keypad/SP0-Keypad and the SM-Keypad Plus can indicate when a SMARTCARD access is taking place or when the second motor map is active (menu 21). These are indicated on the displays as follows:

	SM-Keypad / SP0-Keypad	SM-Keypad Plus
SMARTCARD access taking place	The decimal point after the fourth digit in the upper display will flash.	The symbol ‘CC’ will appear in the lower left hand corner of the display
Second motor map active	The decimal point after the third digit in the upper display will flash.	The symbol ‘Mot2’ will appear in the lower left hand corner of the display
Solutions Module parameters displayed		The symbol ‘Opx’ will appear in the left hand corner of the display.

6.2 Keypad operation

6.2.1 Control buttons

The keypad consists of:
1. Joypad - used to navigate the parameter structure and change parameter values.
2. Mode button - used to change between the display modes – parameter view, parameter edit, status.
3. Three control buttons - used to control the drive if keypad mode is selected.
4. Help button (SM-Keypad Plus only) - displays text briefly describing the selected parameter.

The Help button toggles between other display modes and parameter help mode. The up and down functions on the joypad scroll the help text to allow the whole string to be viewed. The right and left functions on the joypad have no function when help text is being viewed.
The display examples in this section show the SM-Keypad 7 segment LED display. The examples are the same for the SM-Keypad Plus except that the information displayed on the lower row on the SM-Keypad is displayed on the right hand side of the top row on the SM-Keypad Plus.

Figure 6-4 Display modes

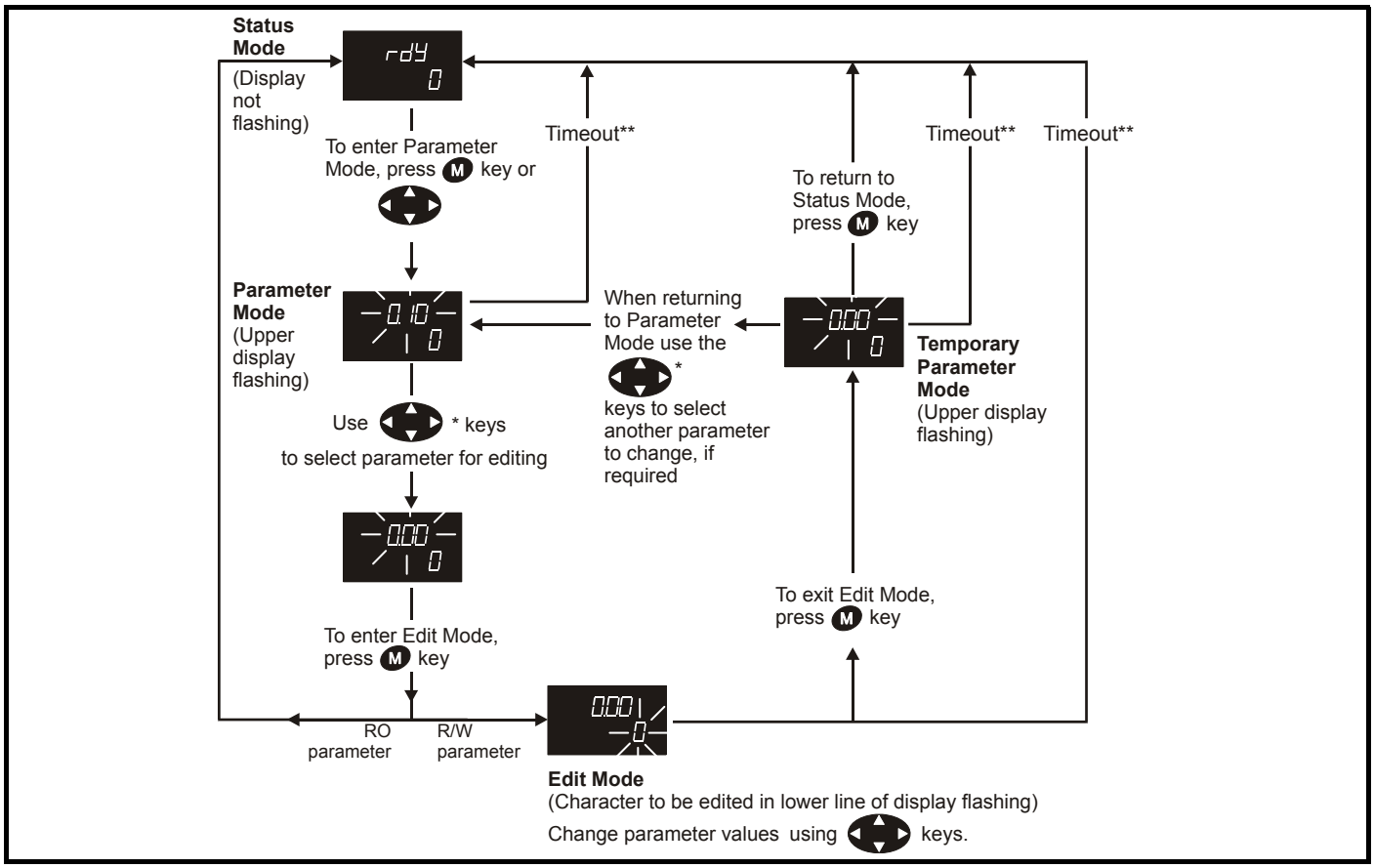

* Can only be used to move between menus if L2 access has been enabled (Pr **0.49**). Refer to section 6.14 *Parameter access level and security* on page 91.
Timeout defined by Pr **11.41 (default value = 240 s).

Figure 6-5 Mode examples

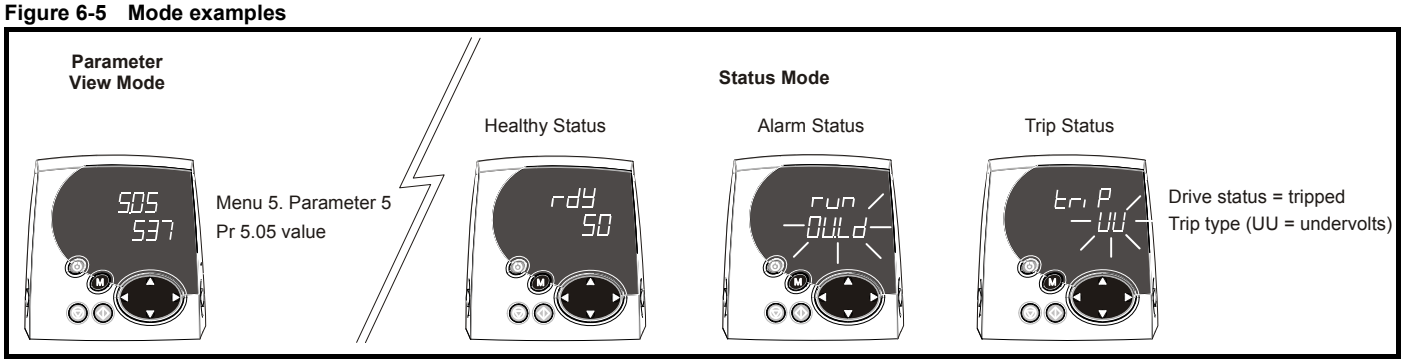

WARNING

Do not change parameter values without careful consideration; incorrect values may cause damage or a safety hazard.

NOTE

When changing the values of parameters, make a note of the new values in case they need to be entered again.

NOTE

For new parameter-values to apply after the AC supply to the drive is interrupted, new values must be saved. Refer to section 6.11 *Saving parameters* on page 90.

6.3 SM-Keypad Plus

The following information covers the SM-Keypad Plus with alpha numeric LCD display and additional Help feature. The following section details displaying and adjusting the elevator drive parameters.

6.3.1 SM-Keypad and SM-Keypad Plus function details

Figure 6-6 SM-Keypad Plus

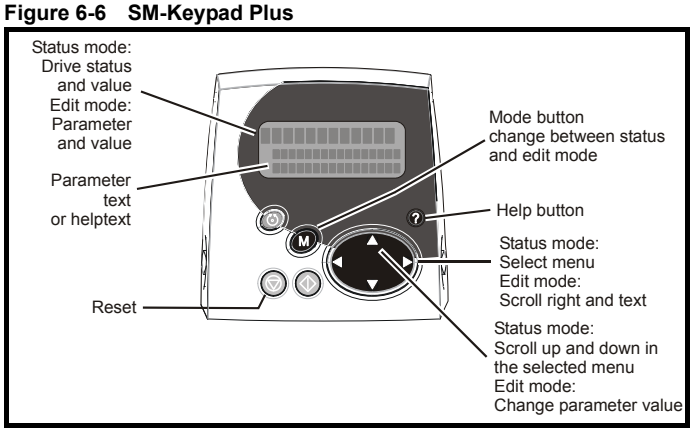

NOTE

The SM-Keypad Plus display is recommended for use with the Elevator Solution Software with this providing help text in addition to the parameter descriptions.

NOTE

When using the SM-Keypad Plus display with the Elevator Solution Software it is recommended that the keypad custom elevator text is programmed into the SM-Keypad Plus display. The custom elevator text will provide detailed information on specific elevator parameters on the display which would not normally be available with the standard keypad software.

NOTE

The SM-Keypad Plus display must be used along with the custom elevator text file if operation with the F menu is required.

6.4 Operation

Figure 6-7 SM-Keypad Plus display at power-up

Status	Display
Initializing	Keypad Plus Initializing Ver: 01.00.00
Only on first power-up	Keypad Plus READING DATABASE Drive
Only on first power-up	Keypad Plus PROGRAMMING FLASH Drive
Display Operating mode	inh SErVO Operating mode
If the drive has tripped the display is flashing. Refer to Chapter 12 *Diagnostics*	trip Enc3
Initializing finished Drive ready	0.10 0.0 Motor speed

Figure 6-8 Select parameter

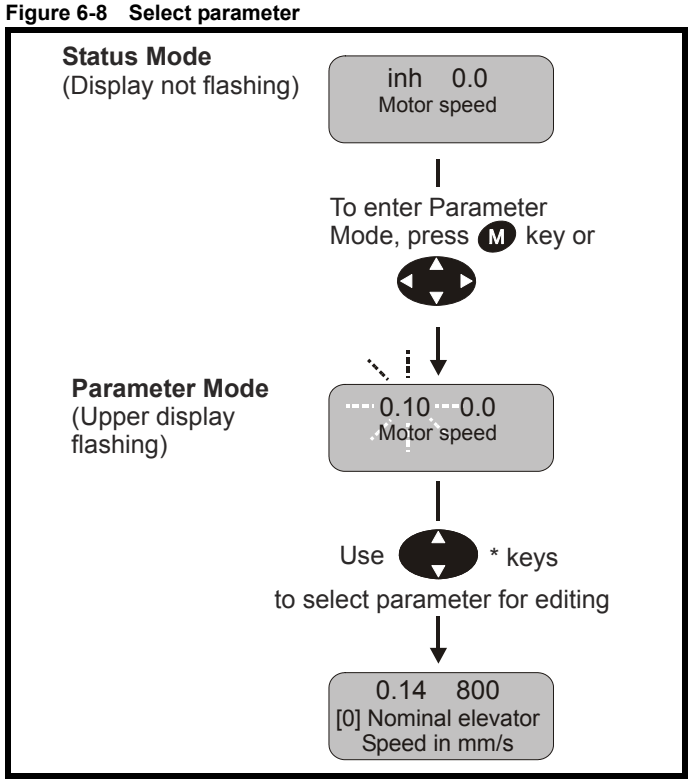

Figure 6-9 Edit parameter

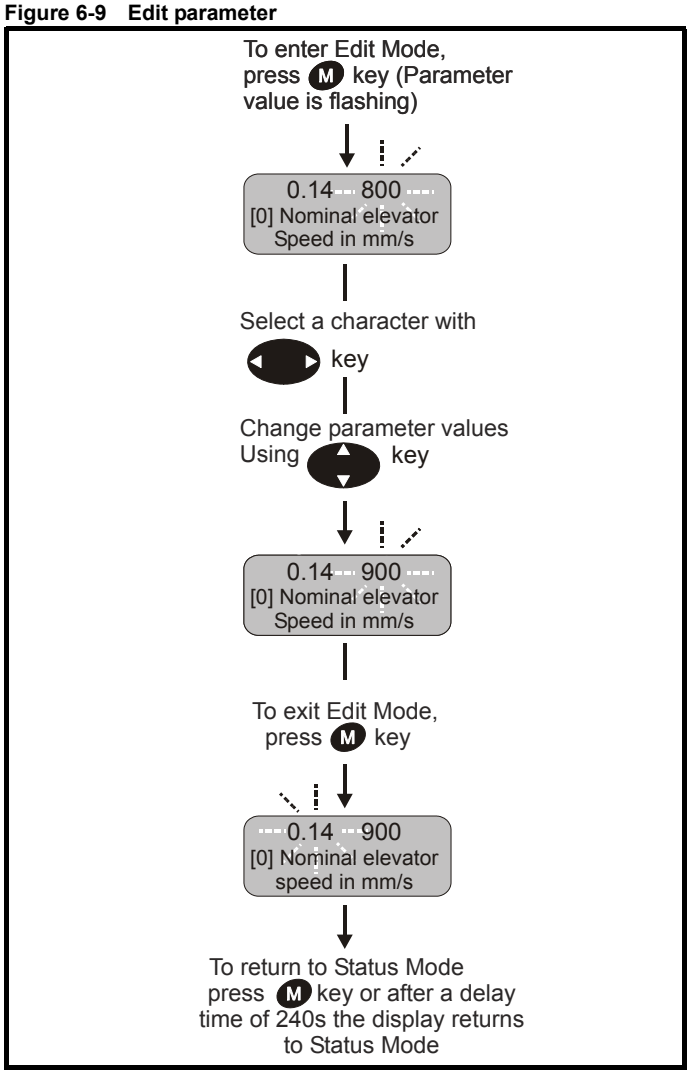

Figure 6-10 Edit parameter in another Menu 0 level

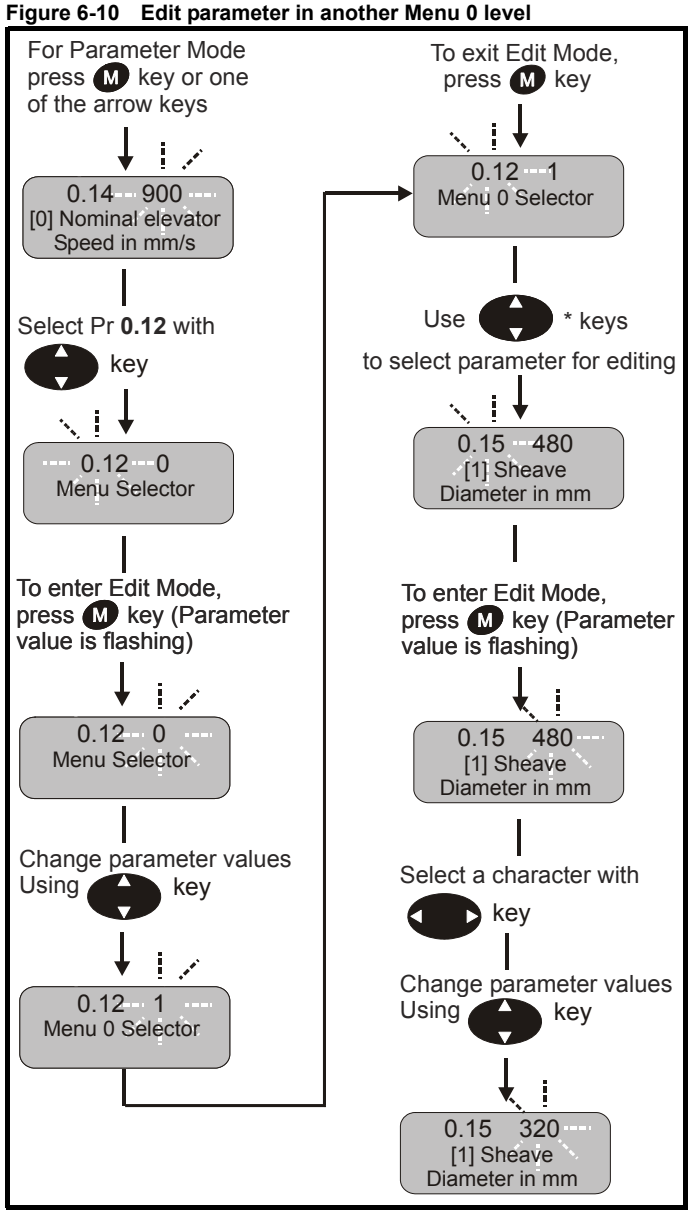

6.5 Menu structure

The drive parameter structure consists of menus and parameters.
The drive initially powers up so that only menu 0 can be viewed. The up and down arrow buttons are used to navigate between parameters and once level 2 access (L2) has been enabled (see Pr **0.49**) the left and right buttons are used to navigate between menus. For further information refer to section 6.14 *Parameter access level and security* on page 91.

Figure 6-11 Parameter navigation

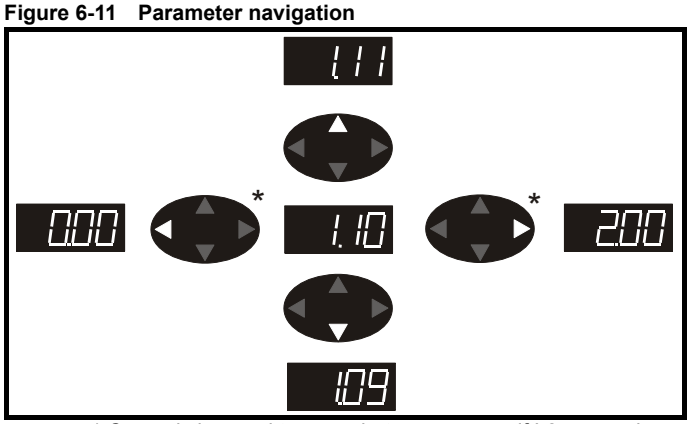

* Can only be used to move between menus if L2 access has been enabled (Pr **0.49**). Refer to section 6.14 *Parameter access level and security* on page 91.

The menus and parameters will roll over in both directions.
i.e. if the last parameter is displayed, a further press will cause the display to rollover and show the first parameter.
When changing between menus the drive remembers which parameter was last viewed in a particular menu and thus displays that parameter.

Figure 6-12 Menu structure

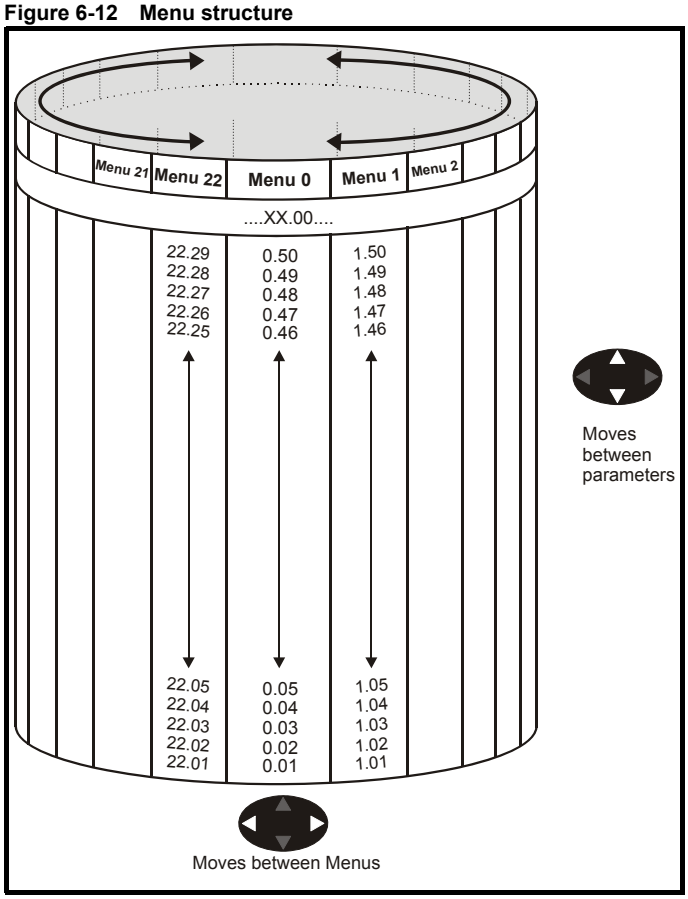

6.6 Menu 0

Menu 0 is used to bring together various commonly used parameters for basic easy set up of the drive.
Appropriate parameters are cloned from the advanced menus into menu 0 and thus exist in both locations.

Figure 6-13 Menu 0 Copying

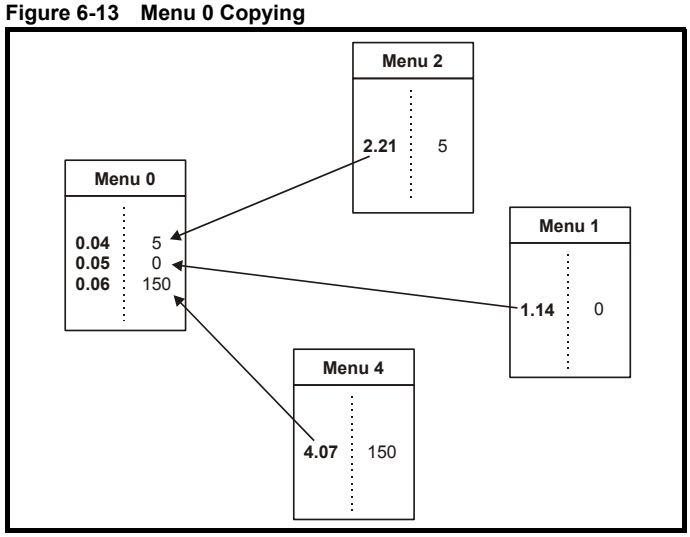

6.7 Advanced menus

The advanced menus consist of groups or parameters appropriate to a specific function or feature of the drive. Menus 0 to 22 can be viewed on all keypads. Menus 40 and 41 are specific to the SM-Keypad Plus (LCD). Menus 70 to 91 can be viewed with an SM-Keypad Plus (LCD) only when an SM-Applications or SM-Applications Lite is installed.

Menu	Description	LED	LCD
0	Commonly used basic set up parameters for quick / easy programming	✓	✓
1	Frequency / speed reference	✓	✓
2	Ramps	✓	✓
3	Slave frequency, speed feedback and speed control	✓	✓
4	Torque and current control	✓	✓
5	Motor control	✓	✓
6	Sequencer and clock	✓	✓
7	Analog I/O	✓	✓
8	Digital I/O	✓	✓
9	Programmable logic, motorized pot and binary sum	✓	✓
10	Status and trips	✓	✓
11	General drive set-up	✓	✓
12	Threshold detectors and variable selectors	✓	✓
13	Position control	✓	✓
14	User PID controller	✓	✓
15, 16, 17	Solutions Module set-up	✓	✓
18	Application menu 1	✓	✓
19	Application menu 2	✓	✓
20	Application menu 3	✓	✓
21	Second motor parameters	✓	✓
22	Additional Menu 0 set-up	✓	✓
40	Keypad configuration menu	X	✓
41	User filter menu	X	✓
70	PLC registers	X	✓
71	PLC registers	X	✓
72	PLC registers	X	✓
73	PLC registers	X	✓
74	PLC registers	X	✓
75	PLC registers	X	✓
85	Timer function parameters	X	✓
86	Digital I/O parameters	X	✓
88	Status parameters	X	✓
90	General parameters	X	✓
91	Fast access parameters	X	✓

6.7.1 SM-Keypad Plus set-up menus

Table 6-1 Menu 40 parameter descriptions

Parameter		Range(⇳)
40.00	Parameter 0	0 to 32767
40.01	Language selection	English (0), Custom (1), French (2), German (3), Spanish (4), Italian (5)
40.02	Software version	999999
40.03	Save to flash	Idle (0), Save (1), Restore (2), Default (3)
40.04	LCD contrast	0 to 31
40.05	Drive and attribute database upload was bypassed	Updated (0), Bypass (1)
40.06	Browsing favourites control	Normal (0), Filter (1)
40.07	Keypad security code	0 to 999
40.08	Communication channel selection	Disable (0), Slot1 (1), Slot2 (2), Slot3 (3), Slave (4), Direct (5)
40.09	Hardware key code	0 to 999
40.10	Drive node ID (Address)	0 to 255
40.11	Flash ROM memory size	4Mbit (0), 8Mbit (1)
40.19	String database version number	0 to 999999
40.20	Screen saver strings and enable	None (0), Default (1), User (2)
40.21	Screen saver interval	0 to 600
40.22	Turbo browse time interval	0 to 200 ms

Table 6-2 Menu 41 parameter descriptions

Parameter		Range(⇳)
41.00	Parameter 0	0 to 32767
41.01 to 41.50	Browsing filter source **F01** to **F50**	Pr **0.00** to Pr **391.51**
41.51	Browsing favourites control	Normal (0), Filter (1)

6.7.2 Display messages

The following tables indicate the various possible mnemonics which can be displayed by the drive and their meaning.
Trip types are not listed here but can be found in *Chapter 12 Diagnostics.*

Table 6-3 Alarm indications

Lower display	Description
br.rS	Braking resistor overload
Braking resistor I^2t accumulator (Pr **10.39**) in the drive has reached 75.0 % of the value at which the drive will trip and the braking IGBT is active.	
Hot	Heatsink or control board or inverter IGBT over temperature alarms are active
The drive heatsink temperature has reached a threshold and the drive will trip 'Oh2' if the temperature continues to rise (see the 'Oh2' trip). **or** The ambient temperature around the control PCB is approaching the over temperature threshold (see the 'O.CtL' trip).	
OVLd	Motor overload
The motor I^2t accumulator in the drive has reached 75 % of the value at which the drive will be tripped and the load on the drive is >100 %	
Autotune	Autotune in progress
The autotune procedure has been initialised. 'Auto' and 'tunE' will flash alternatively on the display.	
Lt	Limit switch is active
Indicates that a limit switch is active and that it is causing the motor to be stopped (i.e. forward limit switch with forward reference etc.)	
PLC	Onboard PLC program is running
An Onboard PLC program is installed and running. The lower display will flash 'PLC' once every 10 s.	

Table 6-4 Status indications

Upper display	Description	Drive output stage
ACUU	AC Supply loss	Enabled
The drive has detected that the AC supply has been lost and is attempting to maintain the DC bus voltage by decelerating the motor.		
***Auto tunE**	Autotune in progress	Enabled
The autotune procedure has been initialised. *'Auto' and 'tunE' will flash alternatively on the display.		
dEC	Decelerating	Enabled
The drive is decelerating the motor.		
inh	Inhibit	Disabled
The drive is inhibited and cannot be run. The drive enable signal is not applied to terminal 31 or Pr **6.15** is set to 0.		
rdY	Ready	Disabled
The drive is ready to be run.		
run	Running	Enabled
The drive is running.		
StoP	Stop or holding zero speed	Enabled
The drive is holding zero speed. Regen> The drive is enabled but the AC voltage is too low, or the DC bus voltage is still rising or falling.		
triP	Trip condition	Disabled
The drive has tripped and is no longer controlling the motor. The trip code appears on the lower display.		

Table 6-5 Solutions Module and SMARTCARD status indications on power-up

Lower display	Description
boot	
A parameter set is being transferred from the SMARTCARD to the drive during power-up. For further information, please refer to section 10.2.2 *Reading from the SMARTCARD* on page 189.	
cArd	
The drive is writing a parameter set to the SMARTCARD during power-up. For further information, please refer to section 10.2.1 *Writing to the SMARTCARD* on page 189.	
loAding	
The drive is writing information to a Solutions Module.	

6.8 Programming parameters from the SMARTCARD

The Unidrive SP and Elevator Solution Software can be programmed with a parameter set loaded to a SMARTCARD from an existing system (Unidrive SP and Elevator Solution Software). Or the parameter set for an existing system can be saved to the SMARTCARD.
Programming the Unidrive SP and Elevator Solution Software with a parameter set from an existing system will configure system to operate in the same mode as the system which the parameter set was copied from.

NOTE

Also refer to Chapter 10 *SMARTCARD operation* on page 188.

6.9 Transferring data

Data transfer, erasing and protecting the information is performed by entering a code in Pr **xx.00** and then resetting the drive as shown in Table 6-6.

Table 6-6 SMARTCARD codes

Code	Action
2001	Transfer drive parameters as difference from defaults to a bootable SMARTCARD block in data block number 001
3yyy	Transfer drive parameters to a SMARTCARD block number yyy
4yyy	Transfer drive data as difference from defaults to SMARTCARD block number yyy
5yyy	Transfer drive Onboard PLC program to SMARTCARD block number yyy
6yyy	Transfer SMARTCARD data block yyy to the drive
7yyy	Erase SMARTCARD data block yyy
8yyy	Compare drive parameters with block yyy
9555	Clear SMARTCARD warning suppression flag (V01.07.00 and later)
9666	Set SMARTCARD warning suppression flag (V01.07.00 and later)
9777	Clear SMARTCARD read-only flag
9888	Set SMARTCARD read-only flag
9999	Erase SMARTCARD

Where yyy indicates the block number 001 to 999. See Table 10-1 on page 188 for restrictions on block numbers.

NOTE

If the read only flag is set then only codes 6yyy or 9777 are effective.

6.9.1 SMARTCARD parameter setting

To program the drive with the SMARTCARD using the drive keypad

1. Save drive parameters to the SMARTCARD data block:

- Erase data block x by Pr **0.00** = 700x (x = Number - 7001 for data block 1)
- Action / reset by pressing the reset button
- Save data block x by Pr **0.00** = 400x (x = Number - 4001 for data block 1)
- Action / reset by pressing the reset button
- If trip C.Chg (179) the data block is already used, carry out erase as described above.

NOTE

400x = Transfer difference from defaults only. Refer also to section 10 *SMARTCARD operation* on page 188

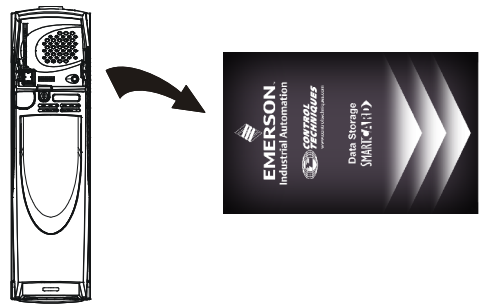

1. Pr **0.00** = 700x
2. Action / reset button
3. Pr **0.00** = 400x
4. Action / reset button

2. Program drive parameters from SMARTCARD data block

- Select data block x with Pr **0.00** = 600x (x = Number - 6001 for data block 1)
- Action / reset by pressing the reset button
- Save Parameters by setting Pr **0.00** = 1000
- Action / reset by pressing the reset button
- trip C.rtg (186) indicate, that the source data block was created from a drive with a different power rating. Motor data and current limit will not be programmed. Manual adjustment is required:
  - Pr **0.06**: Current limit 175...250
  - Pr **0.41**: Switching frequency 6 - 16 kHz
  - Pr **0.46**: Motor current

NOTE

400x = Transfer difference from defaults only. Refer also to section 10 *SMARTCARD operation* on page 188

1. Pr **0.00** = 600x
2. Action / reset button
3. Pr **0.00** = 1000
4. Action / reset button

Programming the drive with a data block from the SMARTCARD will set the operation mode, motor and encoder feedback parameters along with the basic parameters for the elevator drive. After the SMARTCARD parameter set has been programmed to the drive set up can continue directly to section 8.2 *Closed loop vector - Autotune* on page 136, assuming all relevant elevator parameters and configuration have been set-up.

6.10 Changing the operating mode

Changing the operating mode returns all parameters to their default value, including the motor parameters. (Pr **0.49** *Security status* and Pr **0.34** *User security code* are not affected by this procedure.)

Procedure

Use the following procedure only if a different operating mode is required:

1. Ensure the drive is not enabled, i.e. terminal 31 is open or Pr **6.15** is (0)
2. Enter either of the following values in Pr **0.00**, as appropriate:
   1253 (Europe, 50 Hz AC supply frequency)
   1254 (USA, 60 Hz AC supply frequency)
3. Change the setting of Pr **0.48** as follows:

0.48 setting		Operating mode
0.48 OPEn LP	1	Open-loop
0.48 CL VECt	2	Closed-loop Vector
0.48 SERVO	3	Closed-loop Servo
0.48 rEGEn	4	Regen (See the *Unidrive SP Regen Installation Guide* for more information about operating in this mode)

The figures in the second column apply when serial communications are used.

4. Either:
   - Press the red reset button
   - Toggle the reset digital input
   - Carry out a drive reset through serial communications by setting Pr **10.38** to 100 (ensure that Pr. **xx.00** returns to 0).

6.11 Saving parameters

When changing a parameter in Menu 0, the new value is saved when pressing the M Mode button to return to parameter view mode from parameter edit mode.

If parameters have been changed in the advanced menus, then the change will not be saved automatically. A save function must therefore be carried out.

Procedure

Enter 1000 in Pr. **xx.00**

Either:

- Press the red reset button
- Toggle the reset digital input
- Carry out a drive reset through serial communications by setting Pr **10.38** to 100 (ensure that Pr. **xx.00** returns to 0).

NOTE

If the drive is in the under voltage trip state or is being supplied from a low voltage DC supply, a value of 1001 must be entered into Pr **xx.00** to perform a save function.

NOTE

Entering 1253 or 1254 in Pr **xx.00** will only load defaults if the setting of Pr **0.48** has been changed.

6.12 Restoring parameter defaults

Restoring parameter defaults by this method saves the default values in the drive's memory. (Pr **0.49** and Pr **0.34** are not affected by this procedure.)

Procedure

1. Ensure the drive is not enabled, i.e. terminal 31 is open or Pr **6.15** is OFF (0)
2. Enter 1233 (EUR 50Hz settings) or 1244 (USA 60 Hz settings) in Pr **xx.00**.
3. Either:

- Press the red reset button
- Toggle the reset digital input
- Carry out a drive reset through serial communications by setting Pr **10.38** to 100 (ensure that Pr. **xx.00** returns to 0).

6.13 Restoring Elevator Solution Software defaults

All parameters used for the Elevator Solution Software can be set back to the default values at any stage by setting Pr **18.50** = 0.
This will automatically set the Elevator Solution Software parameters to their default values and carry out a save, with all previous parameter adjustments being over written.

6.14 Parameter access level and security

The parameter access level determines whether the user has access to menu 0 only or to all the advanced menus (menus 1 to 22) in addition to menu 0.
The user security determines whether the access to the user is read only or read write. Both the user security and parameter access level can operate independently of each other as shown in the table below:

Parameter Access Level	User Security	Menu 0 status	Advanced menus status
L1	Open	RW	Not visible
L1	Closed	RO	Not visible
L2	Open	RW	RW
L2	Closed	RO	RO

RW = Read / write access RO = Read only access
The default settings of the drive are parameter access level L1 and user security open, i.e. read / write access to Menu 0 with the advanced menus not visible.

6.14.1 Access level

The access level is set in Pr **0.49** and allows or prevents access to the advanced menu parameters.

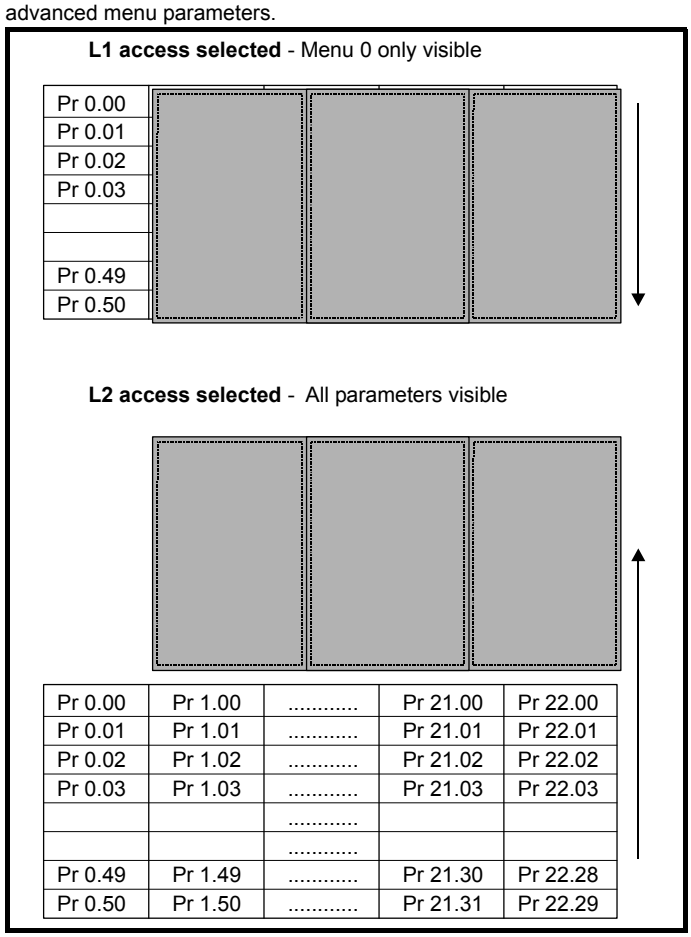

6.14.2 Changing the Access Level

The Access Level is determined by the setting of Pr **0.49** as follows:

String	Value	Effect
L1	0	Access to menu 0 only
L2	1	Access to all menus (menu 0 to menu 22)

The Access Level can be changed through the keypad even if the User Security has been set.

6.14.3 User security

The user security when set, prevents write access to any of the parameters (other than Pr. **0.49** and Pr **11.44** *Access Level*) in any menu.

User security open - All parameters: Read / Write access

Pr 0.00	Pr 1.00	.....	Pr 21.00	Pr 22.00
Pr 0.01	Pr 1.01	.....	Pr 21.01	Pr 22.01
Pr 0.02	Pr 1.02	.....	Pr 21.02	Pr 22.02
Pr 0.03	Pr 1.03	.....	Pr 21.03	Pr 22.03
		.....		
		.....		
Pr 0.49	Pr 1.49	.....	Pr 21.30	Pr 22.28
Pr 0.50	Pr 1.50	.....	Pr 21.31	Pr 22.29

User security closed - All parameters: Read Only access (except Pr **0.49** and Pr **11.44**)

Pr 0.00	Pr 1.00	.....	Pr 21.00	Pr 22.00
Pr 0.01	Pr 1.01	.....	Pr 21.01	Pr 22.01
Pr 0.02	Pr 1.02	.....	Pr 21.02	Pr 22.02
Pr 0.03	Pr 1.03	.....	Pr 21.03	Pr 22.03
		.....		
		.....		
Pr 0.49	Pr 1.49	.....	Pr 21.30	Pr 22.28
Pr 0.50	Pr 1.50	.....	Pr 21.31	Pr 22.29

Setting user security

Enter a value between 1 and 999 in Pr **0.34** and press the M button; the security code has now been set to this value. In order to activate the security, the access level must be set to Loc in Pr **0.49**. When the drive is reset, the security code will have been activated and the drive returns to access level L1. The value of Pr **0.34** will return to 0 in order to hide the security code. At this point, the only parameter that can be changed by the user is the access level Pr **0.49**.

Unlocking user security

Select a read write parameter to be edited and press the M button, the upper display will now show CodE. Use the arrow buttons to set the security code and press the M button.
With the correct security code entered, the display will revert to the parameter selected in edit mode.
If an incorrect security code is entered the display will revert to parameter view mode.

To lock the user security again, set Pr **0.49** to Loc and press the reset button.

Disabling user security

Unlock the previously set security code as detailed above. Set Pr **0.34** to 0 and press the M button. The user security has now been disabled, and will not have to be unlocked each time the drive is powered up to allow read / write access to the parameters.

6.14.4 Elevator Solution Software security code protection (Pr 20.15)

Access to Menu 0 parameters (Pr **0.12** = 1 to 4) is only allowed:
a) If the security code in Pr **20.15** = 0, (default)
b) If the setting of Pr **xx.00** corresponds to the drive security code.
By setting the security code in Pr **20.15** = 0, it will lock the access to the elevator parameter sets available in Menu 0 (Pr **0.12** = 1 to 4). Only personnel who know the security code will be able to access these.

6.15 Displaying parameters with non-default values only

By entering 12000 in Pr **xx.00**, the only parameters that will be visible to the user will be those containing a non-default value. This function does not require a drive reset to become active. In order to deactivate this function, return to Pr **xx.00** and enter a value of 0.
Please note that this function can be affected by the access level enabled, refer to section 6.14 *Parameter access level and security* for further information regarding access level.

6.16 Displaying destination parameters only

By entering 12001 in Pr **xx.00**, the only parameters that will be visible to the user will be destination parameters. This function does not require a drive reset to become active. In order to deactivate this function, return to Pr **xx.00** and enter a value of 0.
Please note that this function can be affected by the access level enabled, refer to section 6.14 *Parameter access level and security* for further information regarding access level.

6.17 Serial communications

6.17.1 Introduction

The Unidrive SP has a standard 2-wire EIA485 interface (serial communications interface) which enables all drive set-up, operation and monitoring to be carried out with a PC or PLC if required. Therefore, it is possible to control the drive entirely by serial communications without the need for a keypad or other control cabling. The drive supports two protocols selected by parameter configuration:

- Modbus RTU
- CT ANSI

Modbus RTU has been set as the default protocol, as it is used with the PC-tools commissioning / start up software as provided on the CD ROM.
The serial communications port of the drive is a RJ45 socket, which is isolated from the power stage and the other control terminals.
The communications port applies a 2 unit load to the communications network.

USB/EIA232 to EIA485 Communications

An external EIA232 hardware interface such as a PC cannot be used directly with the 2-wire EIA485 interface of the drive. Therefore a suitable converter is required.
Suitable USB to EIA485 and EIA232 to EIA485 isolated converters are available from Control Techniques as follows:

- CT USB Comms cable (CT Part No. 4500-0096)
- CT EIA232 Comms cable (CT Part No. 4500-0087)

When using the above converter or any other suitable converter with the Unidrive SP, it is recommended that no terminating resistors be connected on the network. It may be necessary to 'jumper out' the terminating resistor within the converter depending on which type is used. The information on how to jumper out the terminating resistor will normally be contained in the user information supplied with the converter.

6.17.2 Serial communications set-up parameters

The following parameters need to be set according to the system requirements.

0.35 {11.24}	**Serial mode**								
RW	Txt							US	
⇕	AnSI (0) rtU (1)				⇨	rtU (1)			

This parameter defines the communications protocol used by the 485 comms port on the drive. This parameter can be changed via the drive keypad, via a Solutions Module or via the comms interface itself. If it is changed via the comms interface, the response to the command uses the original protocol. The master should wait at least 20 ms before send a new message using the new protocol. (Note: ANSI uses 7 data bits, 1 stop bit and even parity; Modbus RTU uses 8 data bits, 2 stops bits and no parity.)

Comms value	String	Communications mode
0	AnSI	ANSI
1	rtU	Modbus RTU protocol
2	Lcd	Modbus RTU protocol, but with an SM-Keypad Plus only

ANSIx3.28 protocol

Full details of the CT ANSI communications protocol are the *Unidrive SP Advanced User Guide*.

Modbus RTU protocol

Full details of the CT implementation of Modbus RTU are given in the *Unidrive SP Advanced User Guide*.

Modbus RTU protocol, but with an SM-Keypad Plus only

This setting is used for disabling communications access when the SM-Keypad Plus is used as a hardware key. See the *SM-Keypad Plus User Guide* for more details.

0.36 {11.25}	**Serial communications baud rate**								
RW	Txt							US	
⇳	300 (0), 600 (1), 1200 (2), 2400 (3), 4800 (4), 9600 (5), 19200 (6), 38400 (7), 57600 (8)*, 115200 (9)*				⇨	19200 (6)			

* Only applicable to Modbus RTU mode

This parameter can be changed via the drive keypad, via a Solutions Module or via the comms interface itself. If it is changed via the comms interface, the response to the command uses the original baud rate. The master should wait at least 20 ms before send a new message using the new baud rate.

NOTE

When using the CT EIA232 Comms cable the available baud rate is limited to 19.2 kbaud.

0.37 {11.23}	**Serial communications address**								
RW	Txt							US	
⇳	0 to 247				⇨	1			

Used to define the unique address for the drive for the serial interface. The drive is always a slave.

Modbus RTU

When the Modbus RTU protocol is used addresses between 0 and 247 are permitted. Address 0 is used to globally address all slaves, and so this address should not be set in this parameter.

ANSI

When the ANSI protocol is used the first digit is the group and the second digit is the address within a group. The maximum permitted group number is 9 and the maximum permitted address within a group is 9. Therefore, Pr **0.37** is limited to 99 in this mode. The value 00 is used to globally address all slaves on the system, and x0 is used to address all slaves of group x, therefore these addresses should not be set in this parameter.

6.18 Setting of motor and elevator parameters

Before the initial start, the data for the motor and the elevator must be entered. Refer to the motor nameplate and elevator parameters.

Table 6-7 Menu 0 parameters (Pr **0.12 = 0**)

Parameter			Description	Type	Range	Default			Units
						OL	VT	SV	
0.01		**1.07**	Minimum reference clamp	RW	±Speed limit max	0.0			Hz / rpm
0.02	**F22**	**1.06**				50	1500	3000.0	min^{-1}
0.03	**F32**	**2.11**	Acceleration rate	RW	0 to 200	50			cm / s
					0 to 2.00		0.5		mm / s
0.04	**F33**	**2.21**	Deceleration rate	RW	0 to 200	80			cm / s
					0 to 2.00		0.8		mm / s
0.05		**1.14**	Reference selector	RW	0 to 5	Pr			
0.06	**F13**	**4.07**	Symmetrical current limit	RW	Current limit max	165	175		% In
0.07	**F43**	**5.14**	Voltage mode select	RW	Ur_S(0),Ur(1), Fd(2), Ur_Auto(3), Ur_I(4), SrE(5)	4			
		18.27	Speed loop Kp -gain 1 Start	RW	0 to 65,535		0.1000		1/rad s^{-1}
0.08	**F44**	**5.15**	Low frequency boost	RW	0.0 to 25.0 % motor voltage	1 to 3			% mV
		18.28	Speed loop Ki -gain 1 Start	RW	0 to 65,535		10.00		1/rad s^{-1}
0.09		**5.26**	Dynamic V/F enable	RW	OFF (0) or On (1)	OFF (0)			
		3.12	Speed loop Kd -gain 1 Start		0 to 65,535	0.00000	0.00000		1/rad s^{-1}
0.10		**3.02**	Motor speed	RO	± Speed limit max				rpm
0.11		**4.02**	Active current	RO	± Drive current max				A
0.12		**20.16**	Menu zero selector	RW	0 to 4	0			
0.13	**F21**	**18.29**	Nominal elevator speed rpm	RO	0 to 4000	987			rpm
0.14	**F19**	**18.30**	Nominal elevator speed mm/s	RW	0 to 10000	800			mm/s
0.15	**F24**	**18.11**	V1 Creep speed	RW	0 to 10000	50			mm/s
0.16	**F25**	**18.12**	V2 Inspection speed	RW	0 to 10000	400			mm/s
0.17	**F26**	**18.13**	V3 Nominal speed	RW	0 to 10000	800			mm/s
0.18	**F27**	**18.14**	V4 Medium speed 1	RW	0 to 10000	100			mm/s
0.19	**F28**	**18.15**	V5 Relevelling speed	RW	0 to 10000	100			mm/s
0.20	**F29**	**18.16**	V6 Medium speed 2	RW	0 to 10000	100			mm/s
0.21	**F30**	**18.17**	V7 Additional speed 1	RW	0 to 10000	100			mm/s
0.22		**19.13**	Stop deceleration	RW	0 to 1000	200			cm/s^2
				RW	0 to 10000		1000	2000	mm/s^2
0.23	**F34**	**19.14**	Start jerk	RW	0 to 10000	500			mm/s^3
0.24	**F35**	**19.15**	Run jerk	RW	0 to 10000	1000			mm/s^3
0.25	**F36**	**19.16**	Stop jerk	RW	0 to 10000	800			mm/s^3
0.26		**18.21**	Speed threshold 1	RW	0 to 10000	300			mm/s
0.27		**18.22**	Speed threshold 2	RW	0 to 10000	500			mm/s
0.28	**F50**	**18.10**	Reference parameter selected	RO	Pr **18.11** to Pr **18.17**, Pr **20.22** to Pr **20.24**	1810			
0.29	**F05**	**3.34**	Drive encoder lines per revolution	RW	0 to 50,000	1024			PPR
0.30		**11.42**	SMARTCARD parameter cloning	RW	nonE(0),rEAd(1),Prog(2),AutO (3),boot(4)	nonE			
0.31		**20.22**	V8 Additional speed 2	RW	0 to 10000	50			mm/s
0.32		**20.23**	V9 Additional speed 3	RW	0 to 10000	400			mm/s
0.33		**20.24**	V10 Additional speed 4	RW	0 to 10000	800			mm/s
0.34	**F49**	**19.02**	Actual speed	RO	0 to 32,767				mm/s
0.35		**11.24**	Serial comms mode	RW	AnSI(0), rTU(1), Lcd(3)	rtu			
0.36		**11.25**	Serial comms baud rate	RW	300(0) to 115200(9)	19200			baud
0.37		**11.23**	Serial comms address	RW	0 to 247	1			
0.38	**F41**	**4.13**	Current loop Kp - gain 2 Travel	RW	0 to 30,000		75		
0.39	**F42**	**4.14**	Current loop Ki - gain 2 Travel	RW	0 to 30,000		1000		
0.40	**F14**	**5.12**	Autotune	RW	0 to 6	0			0 to 6
0.41	**F12**	**5.18**	Switching frequency	RW	3(0),4(1),6(2),8(3),12(4),16(5)	3			kHz

Parameter			Description	Type	Range	Default			Units
						OL	VT	SV	
0.42	**F09**	**5.11**	Number of motor poles	RW	Auto to 120 poles (0 - 60)	Auto		6	Poles
0.43	**F11**	**5.10**	Power factor	RW	0.000 to 1.000	0.850			
		3.25	Encoder phase angle	RW	0.0 to 359.9			359.9	Degrees
0.44	**F08**	**5.09**	Motor rated voltage	RW	0 to AC voltage set max	Vn motor			V
0.45	**F10**	**5.08**	Rated load rpm / rated speed	RW	0.00 to 40,000.00	1500	1450		rpm
		4.15	Thermal filter	RW	0 to 3000.0			89.0	
0.46	**F07**	**5.07**	Motor rated current	RW	0 to Rated current max	In motor			I rated
0.47		**5.06**	Motor rated frequency	RW	0 to 550	50			Hz
0.48	**F01**	**11.31**	Operating mode	RW	OPEn LP, CL VECt, SErVO	OPEn LP	VT	SErVO	
0.49		**11.44**	Security status	RW	L1(0), L2(1), Loc(2)	L2		L1	
0.50		**11.29**	Drive software version	RO	1.00 to 99.99				

The adjustment of the gear ratio and the sheave diameter is done with the nominal elevator rpm. It can be calculated as follows:

F21, (Pr **18.29**) [$\mathbf{n_{Nominal}}$] = **F19**, (Pr **18.30**)[$\mathbf{V}_{Nominal}$mm/s] **x Gearing x Roping x 60 / (**π **x** $\mathbf{D}_{sheive}$[mm]**)**

For Synchronous motors only, the number of motor poles and the motor current is required. Do not enter the motor data that is greyed out. For the initial test run, only the motor data and the elevator data that is listed in the examples must be adjusted. For elevators with induction motors, with or without encoders, the full motor map must be set.

7 Parameters

For access and adjustment of parameters on the SP, two different types of display are available. The SM-Keypad with a LED display and the SM-Keypad Plus a keypad with an alphanumeric LCD display plus Help function. All displays are hot swappable.

NOTE

If using the SM-Keypad with the LED display parameters accessed in the drive will be the standard parameters.

NOTE

If the pre-configured F Menu parameters are required an SM-Keypad Plus must be used with the alphanumeric LCD display. When using the preconfigured F Menu this limits access to elevator drive parameters from parameter **F01** through to parameter **F51**. For access to the elevator drive Menu 0 and advanced parameters within the elevator drive the Menu select parameter **F51** must be set to Normal.

7.1 Elevator Solution Software status

To verify the Elevator Solution Software is running Pr **20.02** should toggle every 1s between 10614 and -10614.

7.2 Advanced parameters

The advanced menus used by the elevator drive, are menus 18,19, 20, and 21. Detailed information regarding these menus is available beginning in section 7.6 *Menu 18 parameters* on page 100.

7.3 Defaults

All parameters used for the elevator drive software can be set back to the default values through the advanced parameters. Pr **18.50** = OFF (0), this will automatically set the Elevator Solution Software parameters to their default values and carry out a save, all previous parameter adjustments are over written.

7.4 Drive mode change

From Elevator Solution Software version 01.10 the drive parameter settings can be saved during a mode change from for example closed loop vector to open loop. The motor, control interface and elevator parameters are stored in the nonvolatile ram in the Elevator Solution Software. The configuration can be completely restored after a drive mode change provided the following procedure is followed:

1. Pr **xx.00** = 1255 (EUR) or 1256 (US) (change drive mode excluding menus 15 through to 20)
2. Pr **00.48** = Set drive mode
3. Press the reset button -the drive mode change will then be executed.

The following parameters are restored after a drive mode change:

Parameter	Description	Parameter	Description
Pr **2.11**	Acceleration rate	Pr **8.24**	T27 source / destination
Pr **2.21**	Deceleration rate	Pr **8.14**	T27 invert
Pr **4.09**	Torque offset	Pr **8.25**	T28 source / destination
Pr **5.06**	Motor rated frequency	Pr **8.15**	T28 invert
Pr **5.07**	Motor rated current	Pr **8.26**	T29 source / destination
Pr **5.08**	Motor rated rpm / speed	Pr **8.16**	T29 invert
Pr **5.09**	Motor rated voltage	Pr **8.27**	Relay source
Pr **5.10**	Motor rated power factor	Pr **8.17**	Relay source invert
Pr **5.11**	Motor number of poles	Pr **11.23**	Serial address
Pr **5.18**	Switching frequency	Pr **11.24**	Serial mode
Pr **7.10**	Analog input 1 destination	Pr **11.25**	Baud rate
Pr **7.14**	Analog input 2 destination	Pr **12.06**	Threshold 1 output invert
Pr **7.15**	Analog input 3 mode	Pr **12.07**	Threshold 1 destination
Pr **8.21**	T24 source / destination	Pr **12.26**	Threshold 2 output invert
Pr **8.11**	T24 invert	Pr **12.27**	Threshold 2 destination
Pr **8.31**	T24 output select	Pr **21.05**	Fast stop rate
Pr **8.22**	T25 source / destination	Pr **21.16**	Current filter 3 Stop
Pr **8.12**	T25 invert	Pr **21.22**	Current loop Kp -Gain 3 Stop
Pr **8.32**	T25 output select	Pr **21.23**	Current loop Ki -Gain 3 Stop
Pr **8.23**	T26 source / destination	Pr **21.28**	Evacuation current limit full load
Pr **8.13**	T26 invert	Pr **21.29**	Evacuation current limit no load
Pr **8.33**	T26 output select		

NOTE

If the aformentioned sequence of setting Pr **xx.00** = 1255 (EUR) or 1256 (US) is not executed, the factory default settings will be restored to the Unidrive SP without saving the Elevator Solution Software parameter settings.

When the drive mode is changed from open loop to closed loop vector or servo, the following parameters are restored:

Parameter	Description
F40, Pr **4.12**	Current filter 2 travel
F41, Pr **4.13**	Current loop Kp 2 -gain travel
F42, Pr **4.14**	Current loop Ki 2 -gain travel
F05, Pr **3.34**	Drive encoder lines per revolution
F03, Pr **3.38**	Drive encoder type
F06, Pr **3.36**	Drive encoder supply voltage
Pr **3.39**	Drive encoder termination
F11, Pr **3.25**	Drive encoder phase offset

Using this function the elevator can be operated without any additional settings after a mode change back to closed loop vector or servo modes from open loop.

7.5 Elevator drive F menu parameters

NOTE

If using the SM-Keypad / SP0 Keypad with the LED display parameters accessed in the drive will be the standard parameters and not the pre-configured F Menu.

NOTE

If the pre-configured F menu parameters are required an SM-Keypad Plus must be used with the alphanumeric LCD display. When using the preconfigured F menu this limits access to elevator drive parameters from parameter **F01** through to parameter **F51**. For access to the elevator drive menu 0 and advanced parameters within the elevator drive the menu select parameter **F51** must be set to Normal

To use the F menu the SM-Keypad Plus must also have the correct text file programmed and the elevator drive software must be ≥ V01.18

7.5.1 Selecting F-Menu configuration with SM-Keypad Plus

The F-menu can be used for fast set-up of the elevator drive with a suitable programmed SM-Keypad Plus. The parameters of this menu are arranged in the order of the set-up.

To configure the elevator drive menu 0 for the F menu:

Enable F-Menu:

Pr 41.51 = Filter > Display F-Menu

To configure the elevator drive for the standard elevator drive menu 0:

Enable Drive-Menu:

Pr F51 = Normal > Display Unidrive SP-Drive-Menu

Parameter access, Security code

For the pre-configured F menu there is no security code required. Selecting the F menu automatically limits access to just the F menu. All advanced parameter access is disabled.

Defaults

All parameters used for the elevator drive software can only be set back to the default values through the advanced parameters. Pr **18.50** = OFF (0), this will automatically set the elevator drive software parameters to their default values and carry out a save, all previous parameter adjustments are over written.

7.5.2 Advanced parameters

In addition to the F menu for the elevator drive there are advanced menus that can also be accessed. This can be carried out by either setting parameter **F51** = Normal when operating in the F menu, or by simply installing a standard SM-Keypad to the elevator drive.

Table 7-1 F Menu, single line descriptions

Parameter		Description	Type	Range	Default			Units
					OL	VT	SV	
F00	**xx.00**	Pr 00 for code entry	RW	0 to 32,767				
F01	**11.31**	Operating mode	RW	OPEn LP, CL VECt, SErVO	OPEn LP	CL VECt	SErVO	
F02	**19.26**	Number of direction inputs	RW	0 to 1	0			
F03	**3.38**	Drive encoder type	RW	0 to 9	Ab(0)		Ab.Servo	
F04	**3.41**	Drive encoder auto configuration	RW	OFF (0) or On (1)	OFF (0)			
F05	**3.34**	Drive encoder lines per revolution	RW	0 to 50,000	1024		4096	PPR
F06	**3.26**	Drive encoder supply voltage	RW	5 V (0) 8 V (1) 15 V (2)	5 V (0)			V
F07	**5.07**	Motor rated current	RW	0 to Rated current max	In motor			A
F08	**5.09**	Motor rated voltage	RW	0 to AC voltage set max	Vn motor			V
F09	**5.11**	Number of motor poles	RW	Auto to 120 poles (0 - 60)	Auto (0)		6-pole (3)	
F10	**5.08**	Nominal speed	RW	0.00 to 40,000.00	1,500	1,450		rpm
F10	**4.15**	Motor thermal filter	RO	0 to 3000.0			89.0	
F11	**5.10**	Power factor	RW	0.000 to 1.000	0.85			
F11	**3.25**	Encoder phase angle	RW	0.0 to 359.9			0	Degrees
F12	**5.18**	Switching frequency	RW	3(0),4(1),6(2),8(3),12(4),16(5)	3 kHz (0)		6 kHz (0)	kHz
F13	**4.07**	Symmetrical current limit (Pre V1.21)	RW	0 to Motor current limit max	165.0	175.0		%
	5.06	Motor rated frequency (V1.21 onwards)	RW	0 to Motor rated frequency	50			Hz
F14	**5.12**	Autotune	RW	0 to 6	0			
F15	**19.29**	Sheave diameter	RW	0 to 32,767	480			mm
F16	**20.10**	Roping	RW	1:1 (1) 2:1 (2) 3:1 (3) 4:1 (4)	1			
F17	**19.27**	Gear ratio denominator	RW	0 to 32,767	1			
F18	**19.30**	Gear ratio numerator	RW	0 to 32,767	31			
F19	**18.30**	Nominal elevator speed mm/s	RW	0 to 10,000	800			mm/s
F20	**19.31**	Enable operational rpm configuration	RW	OFF (0) or On (1)	On (1)			
F21	**18.29**	Nominal elevator speed rpm	RW	0 to 10,000	987			rpm
F22	**1.06**	Maximum speed clamp (Pre V1.21)	RW	Speed limit max	50 Hz	1,500 rpm	3,000 rpm	Hz / rpm
	4.07	Symmetrical current limit (V1.21 onwards)		0 to Motor current limit max	165.0	175.0		%
F23	**18.45**	Direction invert	RW	OFF (0) or On (1)	OFF (0)			
F24	**18.11**	V1 Creep speed	RW	0 to 10,000	50			mm/s
F25	**18.12**	V2 Inspection speed	RW	0 to 10,000	10			mm/s
F26	**18.13**	V3 Nominal speed	RW	0 to 10,000	100			mm/s
F27	**18.14**	V4 Medium speed 1	RW	0 to 10,000	300			mm/s
F28	**18.15**	V5 Relevelling speed	RW	0 to 10,000	500			mm/s
F29	**18.16**	V6 Medium speed 2	RW	0 to 10,000	800			mm/s
F30	**18.17**	V7 Additional speed 1	RW	0 to 10,000	1000			mm/s
F31	**19.28**	Time for start optimizer	RW	0 to 10,000	700			ms
F32	**2.11**	Acceleration rate	RW	0.0 to 3,200.000	50	0.500		cm/s^2 or m/s^2
F33	**2.21**	Deceleration rate	RW	0.0 to 3,200.000	80	0.800		
F34	**19.14**	Start jerk	RW	0 to 10,000	500			mm/s^3
F35	**19.15**	Run jerk	RO	0 to 10,000	1000			mm/s^3
F36	**19.16**	Stop jerk	RW	0 to 10,000	800			mm/s^3
F37	**19.25**	Brake release delay	RW	0 to 10,000	500			ms
F38	**18.24**	Brake apply delay	RW	0 to 10,000	1000			ms
F39	**4.23**	Current filter 1 start	RW	0 to 25.0		0.0		ms
F40	**4.12**	Current filter 2 travel	RW	0 to 25.0		2.0		ms
F41	**4.13**	Current loop Kp - gain 2 travel	RW	0 to 30,000	20	150	75	
F42	**4.14**	Current loop Ki - gain 2 travel	RW	0 to 30,000	40	2000	1000	
F43	**18.27**	Speed loop Kp - gain 1 start	RW	0 to 20,000		1000		$1/rad\ s^{-1}$
F44	**18.28**	Speed loop Ki - gain 1 start	RW	0 to 20,000		1000		$1/rad\ s^{-1}$
F45	**18.25**	Speed loop Kp - gain 2 travel	RW	0 to 20,000		500		$1/rad\ s^{-1}$
F46	**18.26**	Speed loop Ki - gain 2 travel	RW	0 to 20,000		500		$1/rad\ s^{-1}$
F47	**19.20**	P-gain start locking	RW	0 to 20,000		10		$1/rad\ s^{-1}$
F48	**4.20**	Percentage load	RW	± User current max				%
F49	**19.02**	Actual speed	RW	± 32,000				mm/s
F50	**18.10**	Reference parameter selected	RW	Pr **18.11** to Pr **18.17**	18.10			Pr **xx.xx**
F51	**41.51**	Change F Menu	RO	Filter OR Normal	Filter			

Following are the standard default F menu parameters available with remote keypad operation over the elevator controller display.

Pr	Description	Type	Range	Default
F52	Remote keypad language	RW	English, Deutsche	English
F53	Software version	RO	xxx	
F54	Software variant	RO	±10614	±10614
F55	Remote keypad reset	RW	0 or 1	0

7.6 Menu 18 parameters

Parameter		Description	Type	Range	Default			Units
					OL	VT	SV	
18.01		Not Used	RO					
18.02		Deceleration distance	RO	32,000		0		
18.03		Calculated nominal elevator speed	RO		32			1/min
18.04		Control terminal status	RO	11,111	0			
18.05		Control terminal status	RO	11,111	0			
18.06		Maximum distance error (Trip t071)	RO	32,000	0			mm
18.07		Maximum speed error (Trip t070)	RO	32,000	0			mm/s
18.08		Torque for inertia compensation	RO	32,000	0			0.1% Mn
18.09		Remaining floor sensor correction distance	RO	32,000		0		mm
18.10	**F50**	Reference parameter selector	RO	V1 to V15	1810			Pr
18.11	**F24**	V1 Creep speed	RW	10000	50			mm/s
18.12	**F25**	V2 Inspection speed	RW	10000	500			mm/s
18.13	**F26**	V3 Nominal speed	RW	10000	800			mm/s
18.14	**F27**	V4 Medium speed	RW	10000	10			mm/s
18.15	**F28**	V5 Relevelling speed	RW	10000	100			mm/s
18.16	**F29**	V6 Fast speed	RW	10000	100			mm/s
18.17	**F30**	V7 Additional speed 1	RW	10000	100			mm/s
18.18		Speed for start optimizer	RW	10000	10			mm/s
18.19		Floor sensor correction target distance	RW	10000		0		mm
18.20		Short floor landing distance	RW	10000	0			mm
18.21		v-threshold 1	RW	32767	300			mm/s
18.22		v-threshold 2	RW	32767	500			mm/s
18.23		Magnetizing current threshold (Trip t076)	RW	990	500			0.1%
18.23		Demagnetization time	RW	990			200	ms
18.24	**F38**	Brake apply delay	RW	10000	1000			ms
18.25	**F45**	Speed loop Kp - gain 2 travel	RW	65535		3000		
18.26	**F46**	Speed loop Ki - gain 2 travel	RW	65535		1500		
18.27	**F43**	Speed loop Kp - gain 1start	RW	65535		6000		
18.28	**F44**	Speed loop Ki - gain 1 start	RW	65535				
18.29	**F21**	Nominal elevator speed rpm	RW	4000	32			1/min
18.30		Nominal elevator speed mm/s	RW	10000	800			mm/s
18.31		Brake control output	RW	OFF(0) or On(1)	OFF(0)			
18.32		v-threshold 1 status	RW	OFF(0) or On(1)	OFF(0)			
18.33		v-threshold 2 status	RW	OFF(0) or On(1)	OFF(0)			
18.34		Standstill	RW	OFF(0) or On(1)	On(1)			
18.35		Enable short floor landing	RW	OFF(0) or On(1)	OFF(0)			
18.36		Reference select Bit 0	RW	OFF(0) or On(1)	OFF(0)			
18.37		Reference select Bit 1	RW	OFF(0) or On(1)	OFF(0)			
18.38		Reference select Bit 2	RW	OFF(0) or On(1)	OFF(0)			
18.39		Reference select Bit 3	RW	OFF(0) or On(1)	OFF(0)			
18.40		Reference select Bit 4	RW	OFF(0) or On(1)	OFF(0)			
18.41		Reference select Bit 5	RW	OFF(0) or On(1)	OFF(0)			
18.42		Reference selector type	RW	OFF(0) or On(1)	OFF(0)			
18.43		Motor magnetized (Trip t076)	RO	OFF(0) or On(1)	OFF(0)			
18.44		Direction input 1 CCW	RO	OFF(0) or On(1)	OFF(0)			
18.45	**F23**	Invert direction	RW	OFF(0) or On(1)	OFF(0)			
18.46		Enable external load measurement	RW	OFF(0) or On(1)	OFF(0)			
18.47		Enable peak curve operation	RW	OFF(0) or On(1)	OFF(0)			
18.48		Enable separate start - travel gains	RW	OFF(0) or On(1)		On(1)		
18.48		Enable variable stator resistance	RW	OFF(0) or On(1)	OFF(0)			
18.49		Enable Inertia compensation	RW	OFF(0) or On(1)	OFF(0)			
18.50		Default elevator software parameters	RW	OFF(0) or On(1)	On(1)			

Advanced Parameter Descriptions

18.02	**Deceleration distance**															
Variants	Unidrive SP, Unidrive ES, Digitax ST															
Drive modes	Closed-loop vector, Servo															
Coding	Bit	Txt	VM	RO	US	RW										
				1												
Range	Closed-loop vector, Servo						0 to 32,000 (mm)									
Default	Closed-loop vector, Servo						0									
Linked to																
Update rate	Background read															

This parameter shows the distance error from the profile position to the actual position during deceleration in mm.

18.03	**Calculated nominal elevator speed**															
Variants	Unidrive SP, Unidrive ES, Digitax ST															
Drive modes	Open-loop, Closed-loop vector, Servo															
Coding	Bit	Txt	VM	RO	US	RW										
				1												
Range	Open-loop, Closed-loop vector, Servo						0 to 32,000 (rpm)									
Default	Open-loop, Closed-loop vector, Servo						32									
Linked to																
Update rate	4 ms read															

This is the nominal elevator speed in rpm (actual speed of the elevator motor before taking into account any gear ratios and the roping) and is derived from the "Automatic motor nominal rpm" tuning through parameter Pr **19.31**. For manual adjustment of the calculated elevator speed refer to Pr **18.29**.

18.04	**Control terminal status**															
18.05	**Control terminal status**															
Variants	Unidrive SP, Unidrive ES, Digitax ST															
Drive modes	Open-loop, Closed-loop vector, Servo															
Coding	Bit	Txt	VM	RO	US	RW										
				1												
Range	Open-loop, Closed-loop vector, Servo						00000 to 11111									
Default	Open-loop, Closed-loop vector, Servo						0									
Linked to																
Update rate	Background read															

The two parameters above are used to indicate the state of the control terminals between the drive and the lift controller. Pr **18.04** and Pr **18.05** are arranged into two groups and displayed as follows for the default configuration:

Figure 7-1 Control terminal status

Drive Parameter	Bit x	No.	**Elevator Drive**
Pr **18.05**	Bit 0	29	**V1** Creep speed, Speed select Bit 0
	Bit 1	26	Fast disable
	Bit 2	27	**V3** Nominal speed, Speed select Bit 2
	Bit 3	5	**V4** Medium speed, Speed select Bit 3
	Bit 4	7	**V2** Re-levelling speed, Speed select Bit 1
Pr **18.04**	Bit 0	24	Advanced door opening, v Threshold 1
	Bit 1	25	Brake control output
	Bit 2	41	Relay function, Drive OK
		42	
	Bit 3	28	Direction input, **ON** = Up, **OFF** = Down
	Bit 4	31	Drive enable STO

18.06	**Maximum distance error (Trip t071)**															
Variants	Unidrive SP, Unidrive ES, Digitax ST															
Drive modes	Open-loop, Closed-loop vector, Servo															
Coding	Bit	Txt	VM	RO	US	RW										
				1												
Range	Open-loop, Closed-loop vector, Servo						0 to 32,000 (mm)									
Default	Open-loop, Closed-loop vector, Servo						0									
Linked to																
Update rate	Background read															

This parameter displays the maximum distance error during operation, this being the integral of the difference between the ramp speed Pr **19.03** and the actual speed of the motor Pr **19.02**. The maximum distance error during one travel is displayed in Pr **18.06** independent of the activation of the error detection and is reset to 0 at every start. The distance error is compared with an allowable user defined threshold set in Pr **19.18**. If the distance error exceeds the threshold, a t071 trip is generated. The distance error detection and t071 trip can be disabled by setting Pr **19.18** = 0.

NOTE

Disabling the maximum distance error detection can result in incorrect operation and the elevator car not positioning correctly due to for example a mechanical issue with the elevator system.s

Parameter	Description
Pr **19.02**	Actual speed
Pr **19.03**	Ramps speed
Pr **19.18**	Maximum distance error threshold

18.07	**Maximum speed error (Trip t070)**															
Variants	Unidrive SP, Unidrive ES, Digitax ST															
Drive modes	Open-loop, Closed-loop vector, Servo															
Coding	Bit	Txt	VM	RO	US	RW										
				1												
Range	Open-loop, Closed-loop vector, Servo						0 to 32,000 (mm/s)									
Default	Open-loop, Closed-loop vector, Servo						0									
Linked to																
Update rate	Background read															

This parameter displays the maximum speed error during operation and is independent of the activation of the speed error detection. The speed error is reset to 0 at every start.

For closed loop operation the maximum speed error is calculated from the difference between the ramp speed Pr **19.03** and the actual speed of the motor in Pr **19.02**. The speed error is compared with an allowable user defined threshold set in Pr **19.24**. If the threshold is exceeded for more than 100 ms a t070 trip is generated. The maximum speed error detection and t070 trip can be disabled by setting Pr **19.24** = 0.

For open loop mode the maximum speed error detection is activated once the drive reaches current limit operation, and after operation in current limit for an extended time defined in Pr **19.24** (2 s default) a t070 speed error trip is generated. Pr **19.24** defines the maximum allowable time to operate in current limit. High settings of Pr **19.24** will result in the detection being disabled.

NOTE

Disabling the maximum speed error detection can result in incorrect operation with the constant speed of the elevator not being maintained for example due to a mechanical issue with the elevator or induced noise present on the speed feedback with a closed loop system.

Parameter	Description
Pr **19.02**	Actual speed
Pr **19.03**	Ramps speed
Pr **19.24**	Maximum speed error threshold

18.08	**Torque for inertia compensation**															
Variants	Unidrive SP, Unidrive ES, Digitax ST															
Drive modes	Open-loop, Closed-loop vector, Servo															
Coding	Bit	Txt	VM	RO	US	RW										
				1												
Range	Open-loop, Closed-loop vector, Servo						0 to 32,000 (0.1 % Mn)									
Default	Open-loop, Closed-loop vector, Servo						0									
Linked to																
Update rate	Background read															

This is the final level of torque compensation which is calculated from the profile settings and used for the Inertia compensation. The inertia compensation reference from Pr **19.04** is routed directly to Pr **4.09** and visible in Pr **18.08** as a percentage torque. The inertia compensation must to be enabled Pr **18.49** = On (1) for this parameter to display the torque percentage for compensation.

Parameter	Description
Pr **04.09**	Final torque offset
Pr **04.10**	Enable software compensation
Pr **18.49**	Enable inertia compensation
Pr **19.04**	Reference acceleration
Pr **19.19**	Inertia compensation scaling

18.09	**Remaining floor sensor correction distance**															
Variants	Unidrive SP, Unidrive ES, Digitax ST															
Drive modes	Closed-loop vector, Servo															
Coding	Bit	Txt	VM	RO	US	RW										
				1												
Range	Closed-loop vector, Servo						0 to 32,000 (mm)									
Default	Closed-loop vector, Servo						0									
Linked to																
Update rate	Background read															

This parameter displays the remaining position from the floor sensor correction signal to the floor level once the limit switch has been reached.

On activation of the floor sensor correction control the initial position displayed here will be the value set in Pr **18.19** by the user, which is the distance of the floor sensor from the floor. Once the floor sensor correction signal has been activated this parameter will display the actual position of the elevator as it approaches the floor, on reaching the floor Pr **18.09** = 0±1 mm.

Parameter	Description
Pr **18.19**	Floor sensor correction target distance
Pr **19.09**	Speed at floor sensor correction active
Pr **19.42**	Enable floor sensor correction
Pr **20.05**	Time from floor sensor correction active to stop
Pr **20.14**	Floor sensor correction input _ drive control terminal

NOTE

If the stop distance is to low or the floor sensor correction signal is given at too high a speed, it is possible that the elevator may not stop smoothly and a hard stop will occur.

18.10	**Reference parameter selected**															
Variants	Unidrive SP, Unidrive ES, Digitax ST															
Drive modes	Open-loop, Closed-loop vector, Servo															
Coding	Bit	Txt	VM	RO	US	RW										
				1												
Range	Open-loop, Closed-loop vector, Servo						Pr **18.10** to **18.17** and Pr **20.22** to **20.24**									
Default	Open-loop, Closed-loop vector, Servo						1810									
Linked to	F**50**															
Update rate	4 ms read															

This parameter displays the speed reference which has been selected via the drives control terminals. When Pr **18.10** = 1810 this indicates that no speed reference has been selected by the Lift controller over the drives control terminals. The programmable speed references can be viewed in the following parameters as shown below. Also refer to section 5.3 Speed selection for further details on operation and selection of speeds.

Table 7-2 Binary speed selection

Description	Binary speed selection				Preset speed	Display
	Bit 0	Bit 1	Bit 2	Bit 3	Set-up parameter	Pr 18.10 =
	T.29	T.26	T.27	T.5		
V0 Zero speed	0	0	0	0		**18.10**
V1 Creep speed	1				F**24** Pr **18.11**	**18.11**
V2 Inspection speed	0	1			F**25** Pr **18.12**	**18.12**
V3 Nominal speed	1				F**26** Pr **18.13**	**18.13**
V4 Medium speed 1	0	0	1		F**27** Pr **18.14**	**18.14**
V5 Relevelling speed	1				F**28** Pr **18.15**	**18.15**
V6 Medium speed 2	0	1			F**29** Pr **18.16**	**18.16**
V7 Additional speed 1	1				F**30** Pr **18.17**	**18.17**
V8 Additional speed 2	0	0	0	1	Pr **20.22**	**20.22**
V9 Additional speed 3	1				Pr **20.23**	**20.23**
V10 Additional speed 4	0	1			Pr **20.24**	**20.24**
V11 Additional speed 4	1				Pr **71.70**	**71.70**
V12 Additional speed 4	0	0	1		Pr **71.71**	**71.71**
V13 Additional speed 4	1				Pr **71.72**	**71.72**
V14 Additional speed 4	0	1			Pr **71.73**	**71.73**
V15 Additional speed 4	1				Pr **71.74**	**71.74**

Table 7-3 Priority speed selection

Description	Binary speed selection						Preset speed	Display
	Bit 0	Bit 1	Bit 2	Bit 3	Bit 4	Bit 5	Set-up parameter	Pr 18.10 =
	T.29	T.26	T.27	T.5	T.7	T.8		
V0 Zero speed	0	0	0	0	0	0		**18.10**
V1 Creep speed	1						F**24** Pr **18.11**	**18.11**
V2 Inspection speed		1					F**25** Pr **18.12**	**18.12**
V3 Nominal speed			1				F**26** Pr **18.13**	**18.13**
V4 Medium speed 1				1			F**27** Pr **18.14**	**18.14**
V5 Relevelling speed					1		F**28** Pr **18.15**	**18.15**
V6 Medium speed 2							F**29** Pr **18.16**	**18.16**

V1 Creep speed default parameter setting is Pr **18.11**, if required this can be changed by adding the required parameter into Pr **20.12**. For example V3 is to become the creep speed parameter therefore Pr **20.12** = 1813.

From Elevator Software Solution version V01.12.00 onwards the deceleration distances required for the programmed speeds are displayed in parameters Pr **2.13** to Pr **2.18** and Pr **2.23** to Pr **2.25** as shown here:

Speed mm/s	**V2**	**V3**	**V4**	**V5**	**V6**	**V7**	**V8**	**V9**	**V10**
	Pr **18.12**	Pr **18.13**	Pr **18.14**	Pr **18.15**	Pr **18.16**	Pr **18.17**	Pr **20.22**	Pr **20.25**	Pr **20.24**
Deceleration distance cm	Pr **2.13**	Pr **2.14**	Pr **2.15**	Pr **2.16**	Pr **2.17**	Pr **2.18**	Pr **2.23**	Pr **2.24**	Pr **2.25**

In cases where the drives I/O is fully used and additional functions including speed selections are required an additional SM-I/O Plus can be installed to increase the available I/O.

18.11	**V1 Creep speed**															
Variants	Unidrive SP, Unidrive ES, Digitax ST															
Drive modes	Open-loop, Closed-loop vector, Servo															
Coding	Bit	Txt	VM	RO	US	RW										
					1	1										
Range	Open-loop, Closed-loop vector, Servo						0 to 10,000 (mm/s)									
Default	Open-loop, Closed-loop vector, Servo						50									
Linked to	F**24**															
Update rate	4 ms read															

V1 Creep speed default parameter setting is Pr **18.11**, if required this can be changed by adding the required parameter into Pr **20.12**. For example **V3** is to become the creep speed therefore Pr **20.12** = 1813. The deceleration distance for the **V1** Creep speed is calculated during operation and shown in Pr **20.21** as the measured creep distance.

18.12	**V2 Inspection speed**															
Variants	Unidrive SP, Unidrive ES, Digitax ST															
Drive modes	Open-loop, Closed-loop vector, Servo															
Coding	Bit	Txt	VM	RO	US	RW										
					1	1										
Range	Open-loop, Closed-loop vector, Servo						0 to 10,000 (mm/s)									
Default	Open-loop, Closed-loop vector, Servo						500									
Linked to	F**25**															
Update rate	4 ms read															

18.13	**V3 Nominal speed**															
Variants	Unidrive SP, Unidrive ES, Digitax ST															
Drive modes	Open-loop, Closed-loop vector, Servo															
Coding	Bit	Txt	VM	RO	US	RW										
					1	1										
Range	Open-loop, Closed-loop vector, Servo						0 to 10,000 (mm/s)									
Default	Open-loop, Closed-loop vector, Servo						800									
Linked to	F**26**															
Update rate	4 ms read															

18.14	**V4 Medium speed**															
Variants	Unidrive SP, Unidrive ES, Digitax ST															
Drive modes	Open-loop, Closed-loop vector, Servo															
Coding	Bit	Txt	VM	RO	US	RW										
					1	1										
Range	Open-loop, Closed-loop vector, Servo						0 to 10,000 (mm/s)									
Default	Open-loop, Closed-loop vector, Servo						10									
Linked to	F**27**															
Update rate	4 ms read															

18.15	**V5 Relevelling speed**															
Variants	Unidrive SP, Unidrive ES, Digitax ST															
Drive modes	Open-loop, Closed-loop vector, Servo															
Coding	Bit	Txt	VM	RO	US	RW										
					1	1										
Range	Open-loop, Closed-loop vector, Servo						0 to 10,000 (mm/s)									
Default	Open-loop, Closed-loop vector, Servo						100									
Linked to	F**28**															
Update rate	4 ms read															

18.16	**V6 Fast speed**															
Variants	Unidrive SP, Unidrive ES, Digitax ST															
Drive modes	Open-loop, Closed-loop vector, Servo															
Coding	Bit	Txt	VM	RO	US	RW										
					1	1										
Range	Open-loop, Closed-loop vector, Servo						0 to 10,000 (mm/s)									
Default	Open-loop, Closed-loop vector, Servo						100									
Linked to	F**29**															
Update rate	4 ms read															

18.17	**V7 Additional speed 1**															
Variants	Unidrive SP, Unidrive ES, Digitax ST															
Drive modes	Open-loop, Closed-loop vector, Servo															
Coding	Bit	Txt	VM	RO	US	RW										
					1	1										
Range	Open-loop, Closed-loop vector, Servo						0 to 10,000 (mm/s)									
Default	Open-loop, Closed-loop vector, Servo						100									
Linked to	F**30**															
Update rate	4 ms read															

18.18	**Speed for start optimizer**															
Variants	Unidrive SP, Unidrive ES, Digitax ST															
Drive modes	Open-loop, Closed-loop vector, Servo															
Coding	Bit	Txt	VM	RO	US	RW										
					1	1										
Range	Open-loop, Closed-loop vector, Servo						0 to 10,000 (mm/s)									
Default	Open-loop, Closed-loop vector, Servo						10									
Linked to																
Update rate	Background read															

The Start optimizer can be used to overcome starting difficulties or static friction in the elevator system which is a result of for example, a rucksack mechanical arrangement, and elevator pads used in place of rollers, or due to a geared elevator system where compensation is required for the gearbox. The start optimizer software function is activated by setting a time for start optimizer in Pr **19.28** > 0.

Parameter	Description
Pr **18.18**	Speed setting for start optimization Recommended settings from 2 . . . 5 mm/s
Pr **19.17**	Jerk setting for start optimization Recommended settings from 10 . . . 20 (Must be smaller than start jerk)
Pr **19.28**	Time for start optimization and enable > 0 Recommended settings from 500 . . . 800 ms

The default setting of speed for start optimizer is acceptable for most applications. On completion of the optimized start the normal start jerk parameter Pr **19.14** is active as the elevator then follows the standard velocity profile.

Figure 7-2 Start optimizer timing

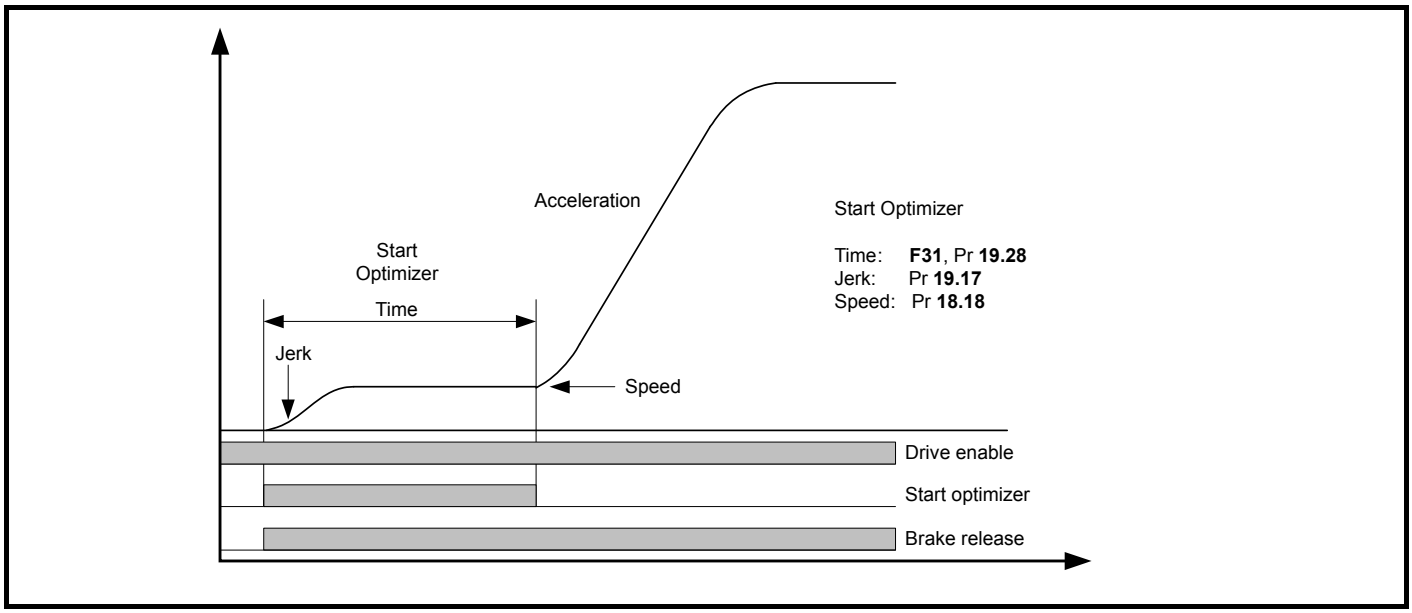

If the target speed set in Pr **18.18** is not reached during the time defined in Pr **19.28** there will be a continuous transition to the nominal acceleration using the start jerk Pr **19.14.**

18.19	**Floor sensor correction target distance**															
Variants	Unidrive SP, Unidrive ES, Digitax ST															
Drive modes	Closed-loop vector, Servo															
Coding	Bit	Txt	VM	RO	US	RW										
					1	1										
Range	Closed-loop vector, Servo						0 to 10,000 (mm)									
Default	Closed-loop vector, Servo						0									
Linked to																
Update rate	Background read															

This parameter defines the floor sensor correction distance for control, distance from the floor sensor / limit switch to the floor level this is set-up by the user based upon the positioning in the elevator shaft.

Pr **18.19** displays the floor sensor correction target distance in mm/s and Pr **18.09** displays the continuously updated remaining floor sensor correction distance as the elevator approaches the floor. When Pr **18.19** is set-up correctly for the distance of the floor sensor / limit switch Pr **18.09** on completion of the travel will = 0, otherwise any error in positioning will be shown in Pr **18.09**.

If the stop distance is to low or the floor sensor signal is given at too high a speed, it is possible that the Elevator may not stop smoothly and a hard stop will occur.

Parameter	Description
Pr **18.09**	Remaining floor sensor correction distance
Pr **19.09**	Speed at floor sensor correction active
Pr **19.42**	Enable floor sensor correction
Pr **20.05**	Time from floor sensor correction active to stop
Pr **20.14**	Floor sensor correction input _ drive control terminal

18.20	**Short floor landing distance**															
Variants	Unidrive SP, Unidrive ES, Digitax ST															
Drive modes	Open-loop, Closed-loop vector, Servo															
Coding	Bit	Txt	VM	RO	US	RW										
					1	1										
Range	Open-loop, Closed-loop vector, Servo						0 to 10,000 (mm)									
Default	Open-loop, Closed-loop vector, Servo						0									
Linked to																
Update rate	Background read															

Short floor landing

If the floor distance is shorter than the braking time distance from the selected speed, peak curve operation cannot be used. This is the case if the total floor distance is less than 0.7 m for example. For such a short floor distance the elevator software function provides the short floor landing distance control. The short floor landing distance control is enabled with Pr **18.35** at the start of the travel and uses the short floor landing distance set-up in Pr **18.20.**

An output is required from the elevator controller to a control input on the drive which enables the short floor landing control. The control signals for both the creep speed and the short floor landing distance enable must be applied simultaneously to the drive at the start of the travel. On activation of the short floor landing distance control the velocity profile is internally modified using the creep speed and the short floor landing distance set in Pr **18.20**. When the creep speed command is disabled, the drive stops the elevator car with the standard stopping profile.

18.21	**v threshold 1**															
18.22	**v threshold 2**															
Variants	Unidrive SP, Unidrive ES, Digitax ST															
Drive modes	Open-loop, Closed-loop vector, Servo															
Coding	Bit	Txt	VM	RO	US	RW										
					1	1										
Range	Open-loop, Closed-loop vector, Servo						0 to 32,767 (mm/s)									
Default	Open-loop, Closed-loop vector, Servo						v threshold 1 = 300 v threshold 2 = 500									
Linked to																
Update rate	Background read															

The above v thresholds define the point in mm/s for both threshold 1 and threshold 2 outputs. Both threshold outputs are derived from the actual speed in mm/s Pr **19.02**, and these can be used for advanced door opening or a speed threshold output. The value defined in both threshold parameters is in mm/s units.

Threshold	Status	Description
Pr **18.21**	Pr **18.32**	v threshold 1 mm/s and output status
Pr **18.22**	Pr **18.33**	v threshold 2 mm/s and output status

18.23 **18.23**	**Magnetization current threshold (Trip t076)** **Demagnetization time, Servo mode**															
Variants	Unidrive SP, Unidrive ES, Digitax ST															
Drive modes	Open-loop, Closed-loop vector, Servo															
Coding	Bit	Txt	VM	RO	US	RW										
					1	1										
Range	Open-loop, Closed-loop vector Servo						0 to 990 (units 0.1 %) 0 to 990 (ms)									
Default	Open-loop, Closed-loop vector Servo						500 200									
Linked to																
Update rate	Background read															

Open loop, Closed loop vector magnetization current threshold

Pr **18.23** is the magnetization current threshold level for the motor control during start. Once the motor has fully magnetized following drive enable the control can then only generate a brake release output signal. The default value for the magnetization current threshold is 50 % of the motor rated current (Pr **18.23** = 500).

If the motor current does not reach the set magnetization current threshold following an enable and a time delay of 6 s a t076 trip is generated. The motor magnetized status is available in Pr **18.43**. The t076 trip can be associated to either a fault with the motor connections, an output motor contactor fault, or the magnetization current threshold is set to high for the motor rated magnetization current.

Motor magnetization current

$$= \sqrt{(\text{Motor rated current}^2 - ((\text{Motor rated current} \times \text{power factor})^2))}$$

For open loop and closed loop vector mode during both the travel and the stop Pr **18.23** and the motor magnetized function are not active.

Servo mode demagnetization time

When operating in servo mode this parameter holds the time taken for the synchronous permanent magnet motor to demagnetize. Once the demagnetization time in Pr **18.23** and brake release delay time Pr **19.25** have elapsed the motor contactor can be opened and the drive enable removed. The demagnetization of the motor is carried out with current limit control and prevents acoustic noise from the motor during removal of the drive enable.

During operation in servo mode and during both the start and travel Pr **18.23** has no function and not active.

18.24	**Brake apply delay**															
Variants	Unidrive SP, Unidrive ES, Digitax ST															
Drive modes	Open-loop, Closed-loop vector, Servo															
Coding	Bit	Txt	VM	RO	US	RW										
					1	1										
Range	Open-loop, Closed-loop vector, Servo						0 to 10,000 (ms)									
Default	Open-loop, Closed-loop vector, Servo						1000									
Linked to	F**38**															
Update rate	4 ms read															

Brake control using drive

In the default setting of the Elevator Solution Software a brake controller is configured to provide a brake release output signal on control terminal T25 of the drive, Pr **8.22** = 18.31 (brake control output signal Pr **18.31**). This parameter holds the mechanical time taken for the brake to be applied and is used to determine the motor contactor open time / drive disable.

Additional delays after the brake apply delay Pr **18.24** are the demagnetization time Pr **18.23** and motor contactor control delay Pr **20.40**. If a drive trip occurs at any stage the brake control will become inactive and the brake will be forced to close by the elevator controller.

Brake control using elevator controller

If the elevator controller is carrying out the brake control, control terminal T25 on the drive can now be configured for “motor magnetized output” Pr **8.22** = 18.43.

Parameter	Description
Pr **18.23**	Demagnetization time
Pr **18.31**	Brake control output
Pr **18.43**	Motor magnetized
Pr **19.25**	Brake release delay
Pr **20.40**	Motor contactor release delay time

18.25	**Speed loop Kp proportional gain 2 travel**															
Variants	Unidrive SP, Unidrive ES, Digitax ST															
Drive modes	Closed-loop vector, Servo															
Coding	Bit	Txt	VM	RO	US	RW										
					1	1										
Range	Closed-loop vector, Servo						0 to 32,767 (0.0001 x 1/rad s^{-1})									
Default	Closed-loop vector, Servo						3000									
Linked to	F**45**															
Update rate	Background read															

See also Pr **71.56** Double gains.

18.26	**Speed loop Ki integral gain 2 travel**															
Variants	Unidrive SP, Unidrive ES, Digitax ST															
Drive modes	Closed-loop vector, Servo															
Coding	Bit	Txt	VM	RO	US	RW										
					1	1										
Range	Closed-loop vector, Servo						0 to 32,767 (0.01 x s/rad s^{-1})									
Default	Closed-loop vector, Servo						1500									
Linked to	F**46**															
Update rate	Background read															

See also Pr **71.56** Double gains.

18.27	**Speed loop Kp proportional gain 1 start**															
Variants	Unidrive SP, Unidrive ES, Digitax ST															
Drive modes	Closed-loop vector, Servo															
Coding	Bit	Txt	VM	RO	US	RW										
					1	1										
Range	Closed-loop vector, Servo						0 to 32,767 (0.0001 x 1/rad s^{-1})									
Default	Closed-loop vector, Servo						6000									
Linked to	F**43**															
Update rate	Background read															

See also Pr **71.56** Double gains.

18.28	**Speed loop Ki integral gain 1 start**															
Variants	Unidrive SP, Unidrive ES, Digitax ST															
Drive modes	Closed-loop vector, Servo															
Coding	Bit	Txt	VM	RO	US	RW										
					1	1										
Range	Closed-loop vector, Servo						0 to 32,767 (0.01 x s/rad s^{-1})									
Default	Closed-loop vector, Servo						6000									
Linked to	F**44**															
Update rate	Background read															

See also Pr **71.56** Double gains.

For optimization of the speed loop on the drive the following proportional and integral gains are available. During adjustment of the gains the following parameters can be used to monitor the resulting performance, comparing the speed reference to the speed feedback.

Parameter	Description
Pr **3.01**	Final speed reference
Pr **3.02**	Unidrive SP speed feedback
Pr **3.03**	Speed loop following error
Pr **4.02**	Torque producing current

Adjustment of the speed loop gains is carried out in order to:

1. Achieve the best possible ride quality.
2. Prevent roll back issues during start and stop.
3. Prevent speed and distance errors.
4. Overcome acoustic noise and vibration.

Kp proportional gain

If Kp proportional gain has a value and Ki integral gain is set to zero the controller will only have a proportional term, and there must be a speed error to produce a torque reference. As the motor load increases there will be a difference between the speed reference and actual speed (speed feedback). This effect, called regulation depends on the level of the proportional gain, the higher the gain, the smaller the speed following error for a given load.

If the Kp proportional gain is to low for a given load condition;

- The speed following error will increase
- Speed droop and overshoot can be present during transitions in speed reference
- Oscillations can be present during constant speed operation.

If the Kp proportional gain is increased for a given load the speed following error along with the speed droop and overshoot will be reduced.

If the Kp proportional gain is increased to high, either;

- The acoustic noise generated from the motor due to the Kp proportional gain amplifying the speed feedback quantization, will become unacceptably high.
- The closed loop stability limit will be reached where quantization due to the encoder feedback resolution will appear on the speed feedback as oscillations.

Figure 7-3 Speed loop Kp proportional gain

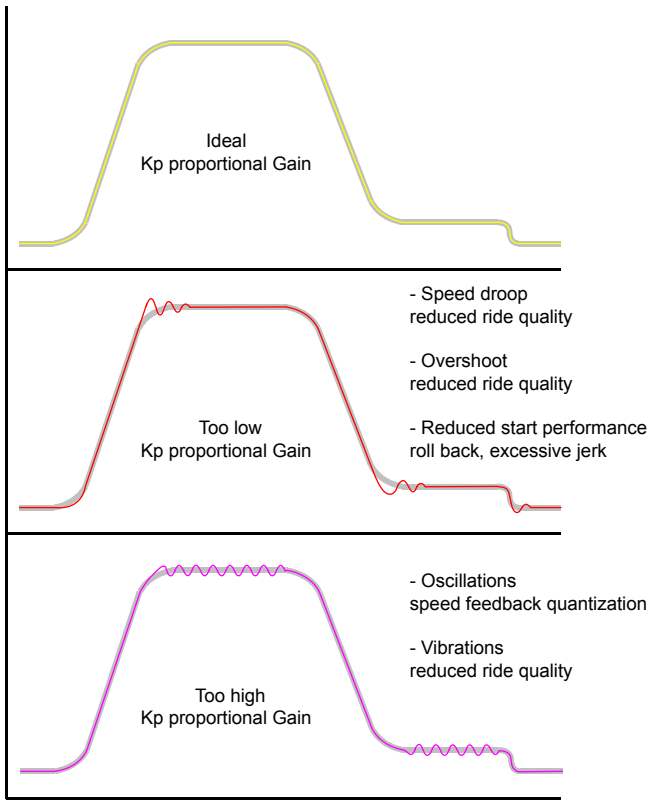

Ki integral gain

The Ki integral gain responds proportionally to the accumulated speed error over a period of time. The Ki integral gain prevents regulation and increases the output dynamic performance.

Increasing the integral gain reduces the time taken for the speed to reach the correct level and increases the stiffness of the system, i.e. it reduces the shaft displacement produced when applying a load torque to the motor.

Increasing the integral gain also reduces the system damping giving overshoot after a transient. For a given Ki integral gain the damping can be improved by further increasing the Kp proportional gain.

A compromise must be reached where the system response, stiffness and damping are all adequate for the application.

Figure 7-4 Speed loop Ki Integral gain

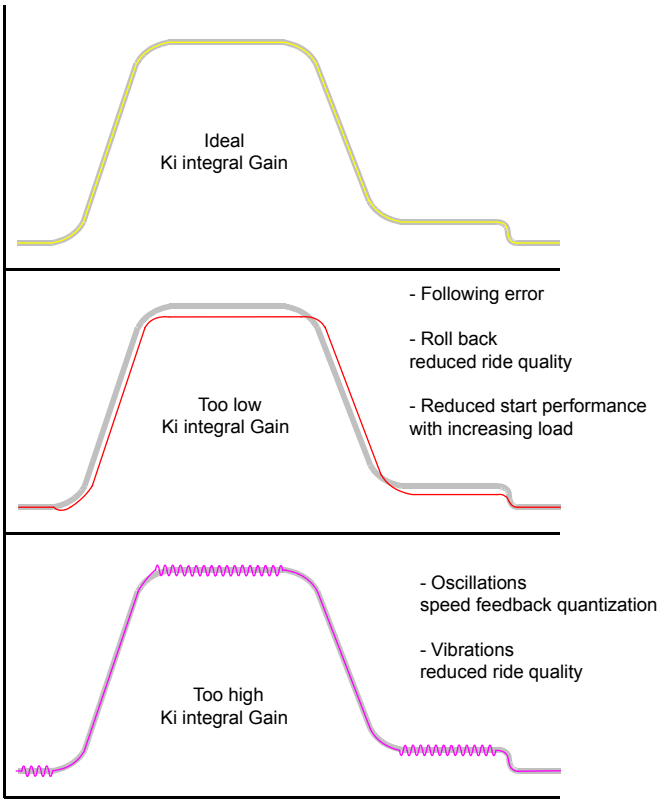

Kd differential gain

For all elevator applications the Kd differential gain for the speed loop settings is not used in either Pr **3.12** or Pr **3.15** of the drive and therefore these should remain at their default value of 0.

NOTE

In addition to the speed loop gains there is also a speed feedback filter Pr **3.42** which can be adjusted to improve the speed feedback quality for closed loop operation when using a low resolution speed feedback devices or where there is induced noise present on the speed feedback.

NOTE

In order to tune the speed loop gains for the best possible operation the lift should be run at both minimum and maximum speeds with both an empty and a full car whenever possible.

NOTE

The resolution of the encoder feedback device will affect the maximum achievable speed loop gains. Higher resolution encoders such as SinCos encoders (for example SC.EnDAt, SC.Hiperface) provide much higher resolution and are the preferred feedback devices for high ride quality.

18.29	**Nominal elevator speed rpm**															
Variants	Unidrive SP, Unidrive ES, Digitax ST															
Drive modes	Open-loop, Closed-loop vector, Servo															
Coding	Bit	Txt	VM	RO	US	RW										
					1	1										
Range	Open-loop, Closed-loop vector, Servo						0 to 4,000 (rpm)									
Default	Open-loop, Closed-loop vector, Servo						32									
Linked to	F**21**															
Update rate	4 ms read															

Pr **18.29** is the actual speed of the elevator in rpm after taking into account the gearing and roping with this being derived from the rated rpm autotune Pr **19.31**. This value is also the same as the calculated nominal elevator speed displayed in parameter Pr **18.03**. The value displayed in Pr **18.03** is a RO (read only) value and therefore where fine adjustment of the rated speed is required (for example to optimize the slip for an induction motor) this can be carried out using this parameter.

Automatic maximum speed limit configuration is carried out using Pr **1.06** from the Nominal elevator speed (rpm) in Pr **18.29**.

18.30	**Nominal elevator speed mm/s**															
Variants	Unidrive SP, Unidrive ES, Digitax ST															
Drive modes	Open-loop, Closed-loop vector, Servo															
Coding	Bit	Txt	VM	RO	US	RW										
					1	1										
Range	Open-loop, Closed-loop vector, Servo						0 to 10,000 (mm/s)									
Default	Open-loop, Closed-loop vector, Servo						800									
Linked to	F**19**															
Update rate	4 ms read															

This is the nominal speed of the elevator in mm/s and entered by the user. This value is used by the rated rpm autotune available in Pr **19.31** along with the gearing and roping to calculate the nominal elevator speed in rpm in Pr **18.29**.

18.31	**Brake control output**															
Variants	Unidrive SP, Unidrive ES, Digitax ST															
Drive modes	Open loop, Closed-loop vector, Servo															
Coding	Bit	Txt	VM	RO	US	RW										
	1			1												
Range	Open loop, Closed-loop vector, Servo						OFF (0) or On (1)									
Default	Open loop, Closed-loop vector, Servo						OFF (0)									
Linked to																
Update rate	Background read															

This parameter is the brake control output signal from the Elevator Solution Software. At default the brake control output signal is set-up for control terminal T25 on the drive (Pr **8.22** = 18.31).

Pr **18.31** = On — Brake release, motor must be fully magnetized (induction motor)
Brake release, motor must be fully magnetized (servo motor)

Pr **18.31** = OFF — Brake apply, motor reached zero speed (induction motor) and ramp completed

Brake apply, motor reached zero speed (servo motor) and ramp completed

Parameter	Description
Pr **18.24**	Brake apply delay
Pr **19.25**	Brake release delay

NOTE

If a drive trip occurs at any stage the brake control will become inactive and the brake will be forced to close by the elevator controller.

18.32	**v threshold 1 status**															
18.33	**v threshold 2 status**															
Variants	Unidrive SP, Unidrive ES, Digitax ST															
Drive modes	Open loop, Closed-loop vector, Servo															
Coding	Bit	Txt	VM	RO	US	RW										
	1			1												
Range	Open loop, Closed-loop vector, Servo						OFF (0) or On (1)									
Default	Open loop, Closed-loop vector, Servo						OFF (0)									
Linked to																
Update rate	Background read															

These parameters display the status of the user defined v threshold outputs 1 and 2 which could be used for features such as advanced door opening or speed monitoring. Also refer to the threshold settings in Pr **18.21** and Pr **18.22**, both threshold outputs are derived from the actual speed in mm/s Pr **19.02**.

Threshold	Status	Description
Pr **18.21**	Pr **18.32**	v threshold 1 mm/s and output status
Pr **18.22**	Pr **18.33**	v threshold 2 mm/s and output status

18.34	**Standstill**															
Variants	Unidrive SP, Unidrive ES, Digitax ST															
Drive modes	Open loop, Closed-loop vector, Servo															
Coding	Bit	Txt	VM	RO	US	RW										
	1			1												
Range	Open loop, Closed-loop vector, Servo						OFF (0) or On (1)									
Default	Open loop, Closed-loop vector, Servo						On (1)									
Linked to																
Update rate	Background read															

This parameter indicates when the elevator motor is at standstill and can be used as a feedback signal for elevator controllers.

18.35	**Enable short floor landing**															
Variants	Unidrive SP, Unidrive ES, Digitax ST															
Drive modes	Open loop, Closed-loop vector, Servo															
Coding	Bit	Txt	VM	RO	US	RW										
	1				1	1										
Range	Open loop, Closed-loop vector, Servo						OFF (0) or On (1)									
Default	Open loop, Closed-loop vector, Servo						OFF (0)									
Linked to																
Update rate	Background read															

If the floor distance is shorter than the braking time distance from the selected speed, peak curve operation cannot be used. This is the case if the total floor distance is less than 0.7 m for example. For such a short floor distance the elevator software function provides the short floor landing distance control which is enabled with this parameter at the start of the travel and uses the short floor landing distance set-up in Pr **18.20.** An output is required from the elevator controller to a control input on the drive which enables the short floor landing control with this parameter. The control signals for both the creep speed and the short floor landing distance enable must be applied simultaneously to the drive at the start of the travel. On activation of the short floor landing distance control the velocity profile is internally modified using the creep speed and the short floor landing distance set in Pr **18.20**. When the creep speed command is disabled, the drive stops the elevator car with the standard stopping profile.

18.36	**Reference select Bit 0 V0**															
18.37	**Reference select Bit 1 V1**															
18.38	**Reference select Bit 2 V2**															
18.39	**Reference select Bit 3 V3**															
18.40	**Reference select Bit 4 V4**															
18.41	**Reference select Bit 5 V5**															
Variants	Unidrive SP, Unidrive ES, Digitax ST															
Drive modes	Open loop, Closed-loop vector, Servo															
Coding	Bit	Txt	VM	RO	US	RW										
	1				1	1										
Range	Open loop, Closed-loop vector, Servo						OFF (0) or On (1)									
Default	Open loop, Closed-loop vector, Servo						OFF (0)									
Linked to																
Update rate	Background read															

The reference select bits indicate which speed has been selected using the drives control terminals. Selection of the above reference select bits are made through Menu 7 and Menu 8 drive control terminal configuration.

In cases where the drives I/O is fully used and additional functions including speed selections are required, an additional SM-I/O Plus module can be installed to increase the available I/O.

18.42	**Reference selector type**															
Variants	Unidrive SP, Unidrive ES, Digitax ST															
Drive modes	Open loop, Closed-loop vector, Servo															
Coding	Bit	Txt	VM	RO	US	RW										
	1				1	1										
Range	Open loop, Closed-loop vector, Servo						OFF (0) or On (1)									
Default	Open loop, Closed-loop vector, Servo						OFF (0)									
Linked to																
Update rate	Background read															

Speed selection can be configured for either binary (up to 16 speeds) or priority (up to 7 speeds). Selection of either binary or priority speed selection is dependent upon the elevator controller. The default setting for the speed selection is binary. To switch to priority speed selection (1 of n), set Pr **18.42** = On (1).

In cases where the drives I/O is fully used and additional functions including speed selections are required, an additional SM-I/O Plus module can be installed to increase the available I/O.

18.43	**Motor magnetized (Trip t076)**															
Variants	Unidrive SP, Unidrive ES, Digitax ST															
Drive modes	Open loop, Closed-loop vector, Servo															
Coding	Bit	Txt	VM	RO	US	RW										
	1			1												
Range	Open loop, Closed-loop vector						OFF (0) or On (1)									
Default	Open loop, Closed-loop vector						OFF (0)									
Linked to																
Update rate	Background read															

This parameter displays the motor magnetized status, following drive enable and once the motor has fully magnetized above the motor magnetized threshold level set in Pr **18.23** this parameter will switch **OFF** to **On**. The actual magnetization current level can be viewed in both Pr **20.07** as a percentage of the rated magnetization current or Pr **4.17** as the actual magnetization current. If the motor does not reach the motor magnetized current threshold level following drive enable and in the time allocated of 6 s, a t076 trip will be generated.

If the brake control is being carried out by the elevator controller this parameter can be routed via a digital output on T25 to provide an indication of motor magnetized. The motor magnetized bit Pr **18.43** is set in servo mode as soon as the drive is enabled.

18.44	**Direction input 1 CCW**															
Variants	Unidrive SP, Unidrive ES, Digitax ST															
Drive modes	Open loop, Closed-loop vector, Servo															
Coding	Bit	Txt	VM	RO	US	RW										
	1			1												
Range	Open loop, Closed-loop vector, Servo						OFF (0) or On (1)									
Default	Open loop, Closed-loop vector, Servo						OFF (0)									
Linked to																
Update rate	Background read															

This parameter displays the direction selected (CCW = counter clock wise) using the drives digital inputs.

Pr 19.26 = 0 single direction input	
	Pr **18.44** = OFF (0) clockwise rotation demanded
	Pr **18.44** = On (1) counter clockwise rotation demanded
Pr 19.26 = 1 dual direction inputs	
	Pr **18.44** = OFF (0) no counter clockwise rotation demanded
	Pr **18.44** = On (1) counter clockwise rotation demanded.
	Pr **19.44** = OFF (0) no clockwise rotation demand
	Pr **19.44** = On (1) clockwise rotation demanded

Pr **18.45** is the invert direction this will invert the direction but will not affect Pr **18.44** display.

NOTE

A change of direction during the travel will cause the elevator to stop.

18.45	**Invert direction**															
Variants	Unidrive SP, Unidrive ES, Digitax ST															
Drive modes	Open-loop, Closed-loop vector, Servo															
Coding	Bit	Txt	VM	RO	US	RW										
	1				1	1										
Range	Open-loop, Closed-loop vector, Servo						OFF (0) or On (1)									
Default	Open-loop, Closed-loop vector, Servo						OFF (0)									
Linked to	F**23**															
Update rate	4 ms read															

This parameter can be used to invert either the single direction input on control terminal T28, or to invert the dual direction inputs on control terminals T27 and T28 of the drive. Inverting the direction using this parameter does not affect the value in either Pr **18.44** (CCW counter clock wise) or Pr **19.44** (CW clock wise). Selection of single or dual direction inputs is made through Pr **19.26**.

Pr **18.45** direction invert if switched during operation will cause the elevator to stop, the change in direction is only allowed following the completion of the current, previous travel.

18.46	**Enable external load measurement**															
Variants	Unidrive SP, Unidrive ES, Digitax ST															
Drive modes	Open loop, Closed-loop vector, Servo															
Coding	Bit	Txt	VM	RO	US	RW										
	1				1	1										
Range	Open loop, Closed-loop vector, Servo						OFF (0) or On (1)									
Default	Open loop, Closed-loop vector, Servo						OFF (0)									
Linked to																
Update rate	Background read															

The external load measurement feature allows load dependent torque compensation to be applied using a load cell installed to the elevator system and connected to the drives analog input (analog input 2) and routed to Pr **4.09**. A suitable load measuring transducer is one which provides for example a ±10 V signal that is proportional to the load present in the elevator car.

Parameter	Description
Pr **4.09**	Torque offset % for compensation
Pr **4.10**	Enable software compensation
Pr **7.02**	Load cell input on analog input 2
Pr **19.21**	Scaling for load cell input
Pr **19.22**	Offset for load cell input
Pr **19.23**	Filter for load cell input

The feedback from the external load cell to the drive is used during starting and acceleration to overcome roll back and provide improved ride comfort. Once the contract speed is reached following the start and acceleration the external load cell feedback is no longer used.

The load measurement is taken prior to brake opening to compensate for the elevator car load and prevent movement on brake release. Adjustment of the external load measurement is possible through scaling Pr **19.21**, offset adjustment Pr **19.22** and a filter Pr **19.23**.

The load cell measurement can be adjusted with different loads at standstill. Standstill can be achieved by increasing the brake release delay Pr **19.25** to an excessive value for example 10,000 ms. For this adjustment the load cell should be enabled Pr **18.46** but the software compensation should be disabled Pr **4.10** = OFF. If inertia compensation is being used this should be disabled Pr **18.49** = OFF prior to set-up of the external load measurement.

Load	Load cell feedback Pr 4.09	Drive % load Pr 4.20
Empty cabin	X1	Y1
Half load	X2	Y2 should be about 0.0
Full load	X3	Y3

The setting of the scaling and the offset are defined as follows. After correct adjustment the value in Pr **4.09** and Pr **4.20** following brake release should be virtually identical.

Load measurement offset is adjusted via Pr **19.22** (1000 = 10V)

Load measurement scaling is adjusted via Pr **19.21** (1000: 10V = 100 % Mn)

Load measurement offset Pr **19.22** = **10 x X2**

Load measurement scaling Pr **19.21 = 1000 x (Y3 – Y1) / (X3 – X1)**

NOTE

Following correct set-up of the external load cell the software compensation should be enabled with Pr **4.10** = On. If inertia compensation was disabled this can now also be re-enabled with Pr **18.49** = On.

18.47	**Enable peak curve operation**															
Variants	Unidrive SP, Unidrive ES, Digitax ST															
Drive modes	Open-loop, Closed-loop vector, Servo															
Coding	Bit	Txt	VM	RO	US	RW										
	1				1	1										
Range	Closed-loop vector, Servo						OFF (0) or On (1)									
Default	Closed-loop vector, Servo						OFF (0)									
Linked to																
Update rate	4 ms read															

Peak curve operation is a function which guarantees a constant stopping distance, independent of the moment when the signal to stop occurs (differing floor levels). This allows the use of a single speed for different floor level distances. Peak curve operation modifies the maximum operating speed for the different floor levels to ensure that the required distance is achieved and floor level is reached using the standard deceleration rate and jerks. Peak curve operation can be used during both direct-to-floor, creep- to-floor and distance controlled creep speed.

Peak curve operation is enabled by setting Pr **18.47** = On. Depending on the actual speed of the elevator when the speed signal is disabled, any one of three different results may occur:

1. If the demanded speed is achieved when the stop is received, there is no change in the speed profile and the normal stopping is carried out.
2. If there is increasing or constant acceleration when the stop is received, braking occurs with the normal profile parameters in a calculated time.
3. Stop is received during decreasing of acceleration, the profile parameters are automatically adjusted.

18.48	**Enable separate start - travel gains**															
Variants	Unidrive SP, Unidrive ES, Digitax ST															
Drive modes	Closed-loop vector, Servo															
Coding	Bit	Txt	VM	RO	US	RW										
	1				1	1										
Range	Closed-loop vector, Servo						OFF (0) or On (1)									
Default	Closed-loop vector, Servo						On (1)									
Linked to																
Update rate	4 ms read															

This parameter allows the control loop gains to be selected for either (a) the complete travel (b) separate gains for the start and for the travel/stop (c) separate gains for the start, the travel and the stop.

Parameter	Description
18.48 = OFF	Constant gains for the complete travel
18.48 = On **19.48** = OFF	Separate gains and current demand filters for the start and the travel
18.48 = On **19.48** = On	Separate gains and current demand filters for the start, travel and stop
19.11	Gain and filter transition time start to travel
20.30	Gain and filter transition time travel to stop

18.48	**Enable variable stator resistance**															
Variants	Unidrive SP, Unidrive ES, Digitax ST															
Drive modes	Open loop															
Coding	Bit	Txt	VM	RO	US	RW										
	1				1	1										
Range	Open loop						OFF (0) or On (1)									
Default	Open loop						OFF (0)									
Linked to																
Update rate	4 ms read															

Open loop motor stator resistance control is enabled with Pr **18.48** = On. Once an autotune has been carried out and Pr **5.17** and Pr **21.12** are set-up with the actual value of the motors stator resistance. Pr **5.17** can then be optimised to achieve maximum starting torque. Pr **21.12** should remain at the autotune value. The transition time between the start value and end value is determined by the transition time in Pr **19.11**. At the end of the travel on removal of the drive enable Pr **5.17** is reset to the optimized start value.

Parameter	Description
Pr **5.17**	Start stator resistance, optimised value for start
Pr **19.11**	Stator resistance transition time
Pr **21.12**	Stop stator resistance, autotune value

18.49	**Enable inertia compensation**															
Variants	Unidrive SP, Unidrive ES, Digitax ST															
Drive modes	Open-loop, Closed-loop vector, Servo															
Coding	Bit	Txt	VM	RO	US	RW										
					1	1										
Range	Open-loop, Closed-loop vector, Servo						OFF (0) or On (1)									
Default	Open-loop, Closed-loop vector, Servo						OFF (0)									
Linked to																
Update rate	4 ms read															

Inertia compensation can be implemented to overcome instability issues due to high system inertia and high speed loop gains where no inertia compensation is present. Implementing the inertia compensation will overcome the high inertia and allow the high speed loop gains to be reduced overcoming acoustic noise, vibration and therefore provide improved performance. The inertia compensation can also be beneficial where encoder mounting issues are present resulting in backlash.

The inertia compensation reference from Pr **19.04** is routed directly to Pr **4.09** (also visible in Pr **18.08** as a percentage torque) once enabled with Pr **18.49** = 1. User adjustment of the inertia compensation can be applied using Pr **19.19** scaling this is adjusted with half load present in the elevator and with a target of maintaining a constant speed loop output Pr **3.04**.

Parameter	Description
Pr **4.09**	Final torque offset
Pr **4.10**	Enable software compensation
Pr **18.08**	Torque level for compensation
Pr **19.04**	Reference acceleration
Pr **19.19**	Inertia compensation scaling

Figure 7-5 Inertia compensation

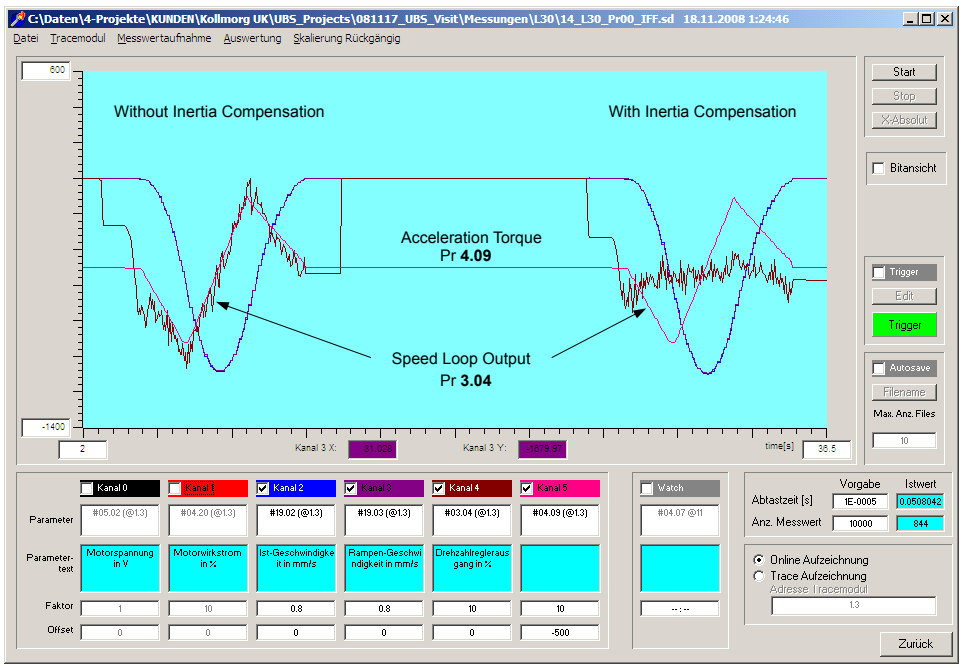

The scaling in Pr **19.19** should be adjusted so that Pr **4.09** the acceleration torque follows the speed controller output in Pr **3.04.** This results in a nearly constant speed controller output, Pr **3.04** as shown above when the torque feed forward Pr **4.09** is enabled with Pr **4.10** = 1.

18.50	**Default elevator software parameters**															
Variants	Unidrive SP, Unidrive ES, Digitax ST															
Drive modes	Open-loop, Closed-loop vector, Servo															
Coding	Bit	Txt	VM	RO	US	RW										
					1	1										
Range	Open-loop, Closed-loop vector, Servo						OFF (0) or On (1)									
Default	Open-loop, Closed-loop vector, Servo						On (1)									
Linked to																
Update rate	4 ms read															

The default elevator parameter allows all parameters used in the elevator software to be set back to their original default values at any stage by setting Pr **18.50** = OFF (0). Once Pr **18.50** is set to OFF (0) it will take approximately 5 s to default the elevator parameter set and return to Pr **18.50** = On (1). This automatically sets parameters to their default values and carries out a save all previous parameters adjustments are now over written.

7.7 Menu 19 parameters

Parameter		Description	Type	Range	Default			Units
					OL	VT	SV	
19.01		Speed setpoint	RO	32767		0		mm/s
19.02	**F49**	Actual speed	RO	32767	0			mm/s
19.03		Ramp speed	RO	32767	0			mm/s
19.04		Reference acceleration	RO	32767	0			mm/s^2
19.05		Stopping distance	RO	32767		13		mm
19.06		Set-point peak curve distance	RO	32767		0		mm
19.07		Measured peak curve distance	RO	32767		0		mm
19.08		Calculated deceleration distance	RO	32767		0		mm
19.09		Speed at floor sensor correction active	RO	32767		0		mm/s
19.10		Measured deceleration distance	RO	32767		0		mm
19.11		Variable gains transition time	RW	32767		1000		ms
19.11		Variable stator resistance transition time	RW	32767	1000			ms
19.12		Kd gain start locking	RW	32767		0		
19.13		Stop deceleration	RW	2000	1000			mm/s^2
19.14	**F34**	Start jerk	RW	10000	500			mm/s^3
19.15	**F35**	Run jerk	RW	10000	1000			mm/s^3
19.16	**F36**	Stop jerk	RW	10000	800			mm/s^3
19.17		Jerk for start optimizer	RW	10000	400	10		mm/s^3
19.18		Maximum distance error threshold	RW	10000	100			mm
19.19		Inertia compensation scaling	RW	32767	1000			0.1 %
19.20	**F47**	Kp gain start locking	RW	1000		10		
19.21		Load measurement scaling	RW	± 32767	1000			0.1 %
19.22		Offset load measurement	RW	± 32768	0			0.3125 mV
19.23		Filter filter load measurement	RW	± 32769	100	100		ms
19.24		Maximum speed error threshold	RW	1000	2000	100		mm/s
19.25	**F37**	Brake release delay	RW	10000	500			ms
19.26	**F02**	Direction input configuration	RW	-1 to 4	0			
19.27	**F18**	Gear ratio denominator	RW	32767	1			
19.28	**F31**	Time for start optimizer	RW	10000	0			ms
19.29	**F15**	Sheave diameter	RW	32767	480			mm
19.30	**F17**	Gear ratio numerator	RW	32767	1			
19.31	**F20**	Automatic motor nominal rpm	RW	OFF (0) or On (1)	On (1)			
19.32		Motor contactor control output	RO	OFF (0) or On (1)	OFF (0)			
19.33		Motor contactor feedback monitor (Trip t078)	RO	OFF (0) or On (1)	On (1)			
19.34		Brake feedback 1 monitoring (Trip t083)	RW	OFF (0) or On (1)	OFF (0)			
19.35		Thermistor overtemperature	RO	OFF (0) or On (1)	OFF (0)			
19.36		Brake feedback 2 monitoring (Trip t083)	RO	OFF (0) or On (1)	OFF (0)			
19.37		Load direction (last measured)	RO	OFF (0) or On (1)	On (1)			
19.38		Emergency rescue enable	RW	OFF (0) or On (1)	OFF (0)			
19.39		Load direction invert	RW	OFF (0) or On (1)	OFF (0)			
19.40		Enable motor contactor monitor (Trip t078)	RW	OFF (0) or On (1)	OFF (0)			
19.41		Reference select Bit 7	RW	OFF (0) or On (1)	OFF (0)			
19.42		Enable floor sensor correction	RW	OFF (0) or On (1)		OFF (0)		
19.43		Enable motor phase loss detection (Trip t077)	RW	OFF (0) or On (1)	OFF (0)	OFF (0)		
19.44		Direction input 2 CW	RW	OFF (0) or On (1)	OFF (0)	OFF (0)		
19.45		Enable blocked elevator releasing	RW	OFF (0) or On (1)	OFF (0)	OFF (0)		
19.46		Fast Start enable	RW	OFF (0) or On (1)	OFF (0)	OFF (0)		
19.47		Enable separate end acceleration jerk	RW	OFF (0) or On (1)	OFF (0)	OFF (0)		
19.48		Enable full variable gains	RW	OFF (0) or On (1)		OFF (0)		
19.49		Enable fast stop	RW	OFF (0) or On (1)	OFF (0)	OFF (0)		
19.50		Global warning	RO	OFF (0) or On (1)	OFF (0)	OFF (0)		

19.01	**Speed set-point**															
Variants	Unidrive SP, Unidrive ES, Digitax ST															
Drive modes	Open-loop, Closed-loop vector, Servo															
Coding	Bit	Txt	VM	RO	US	RW										
				1												
Range	Open-loop, Closed-loop vector, Servo						0 to 32,767 (mm/s)									
Default	Open-loop, Closed-loop vector, Servo						0									
Linked to																
Update rate	4 ms read															

Displays the selected speed set-point **Vx** mm/s. The source parameter for the speed set-point in Pr **19.01** is displayed in Pr **18.10**.

19.02	**Actual speed**															
Variants	Unidrive SP, Unidrive ES, Digitax ST															
Drive modes	Open-loop, Closed-loop vector, Servo															
Coding	Bit	Txt	VM	RO	US	RW										
				1												
Range	Open-loop, Closed-loop vector, Servo						0 to 32767 (mm/s)									
Default	Open-loop, Closed-loop vector, Servo						0									
Linked to	F**49**															
Update rate	4 ms read															

Displays the actual speed of the elevator in mm/s which is directly comparable to Pr **19.01**. Cases where Pr **19.01** and Pr **19.02** are not equal could be for example due to a mechanical issue where the drive is operating in current limit Pr **10.09** = On (1) and unable to follow the speed set-point Pr **19.01**.

19.03	**Ramp speed**															
Variants	Unidrive SP, Unidrive ES, Digitax ST															
Drive modes	Open-loop, Closed-loop vector, Servo															
Coding	Bit	Txt	VM	RO	US	RW										
				1												
Range	Open-loop, Closed-loop vector, Servo						0 to 32,767 (mm/s)									
Default	Open-loop, Closed-loop vector, Servo						0									
Linked to																
Update rate	4 ms read															

Parameter	Description
Pr **02.11**	Acceleration rate
Pr **02.21**	Deceleration rate
Pr **19.13**	Stop deceleration
Pr **19.14**	Start jerk
Pr **19.15**	Run jerk
Pr **19.16**	Stop jerk
Pr **19.47**	Jerk acceleration to travel (Enable with Pr **20.36**)

19.04	**Reference acceleration**															
Variants	Unidrive SP, Unidrive ES, Digitax ST															
Drive modes	Open-loop, Closed-loop vector, Servo															
Coding	Bit	Txt	VM	RO	US	RW										
				1												
Range	Open-loop, Closed-loop vector, Servo						0 to 32,767 (mm/s^2)									
Default	Open-loop, Closed-loop vector, Servo						0									
Linked to																
Update rate	4 ms read															

The reference acceleration in Pr **19.04** is used to generate the final torque reference for inertia compensation (Pr **18.49** Enable inertia compensation). The reference is generated from the profile according to the speed set-point and the settings of the profile parameters.

19.05	**Stopping distance**															
Variants	Unidrive SP, Unidrive ES, Digitax ST															
Drive modes	Closed-loop vector, Servo															
Coding	Bit	Txt	VM	RO	US	RW										
				1												
Range	Closed-loop vector, Servo						0 to 32,767 (mm)									
Default	Closed-loop vector, Servo						0									
Linked to																
Update rate	4 ms read															

This parameter displays the actual calculated stopping distance for both creep- to-floor and direct-to-floor operation as follows,

Distance controlled creep-to-floor operation

- The stopping distance from Creep speed **V1** to zero speed **V0** based upon the stop jerk setting Pr **19.16** and the stop deceleration Pr **19.13**.

Direct-to-floor operation

Stopping distance from creep speed **V1** to zero speed **V0** based upon the stop jerk setting Pr **19.16** and the stop deceleration Pr **19.13.**

19.06	**Set-point peak curve distance**															
Variants	Unidrive SP, Unidrive ES, Digitax ST															
Drive modes	Closed-loop vector, Servo															
Coding	Bit	Txt	VM	RO	US	RW										
				1												
Range	Closed-loop vector, Servo						0 to 32,767 (mm)									
Default	Closed-loop vector, Servo						0									
Linked to																
Update rate	4 ms read															

This parameter shows the set-point distance used for peak curve operation before the controlled stopping distance (Pr **19.05**). The set-point peak curve distance is calculated from the profile parameters (Speed **Vx**, deceleration rate Pr **2.21** and run jerk Pr **19.15**) and displayed in Pr **19.06**.

Parameter	Description
Pr **2.21**	Deceleration rate
Pr **18.47**	Enable peak curve operation
Pr **19.05**	Stopping distance
Pr **19.07**	Measured peak curve distance
Pr **19.15**	Run jerk

19.07	**Measured peak curve distance**															
Variants	Unidrive SP, Unidrive ES, Digitax ST															
Drive modes	Closed-loop vector, Servo															
Coding	Bit	Txt	VM	RO	US	RW										
				1												
Range	Closed-loop vector, Servo						0 to 32,767 (mm)									
Default	Closed-loop vector, Servo						0									
Linked to																
Update rate	4 ms read															

This parameter shows the measured distance during peak curve operation (braking distance) before the controlled stopping distance (Pr **19.05**). This value is the deceleration distance for the applied speed.

Parameter	Description
Pr **2.21**	Deceleration rate
Pr **18.47**	Enable peak curve operation
Pr **19.05**	Stopping distance
Pr **19.06**	Set-point peak curve distance (calculated distance)
Pr **19.15**	Run jerk

19.08	**Calculated deceleration distance**															
Variants	Unidrive SP, Unidrive ES, Digitax ST															
Drive modes	Closed-loop vector, Servo															
Coding	Bit	Txt	VM	RO	US	RW										
				1												
Range	Closed-loop vector, Servo						0 to 32,767 (mm)									
Default	Closed-loop vector, Servo						0									
Linked to																
Update rate	4 ms read															

The deceleration distance based upon the speed and the profile setting are calculated and displayed in Pr **19.08** for the actual speed selected. To adjust the deceleration distance in the lift controller activate the required speed and check the value displayed in Pr **19.08**, then adjust the distance in the lift controller. The deceleration distance is also dependant upon load, as it is not possible to control the distance.

For creep-to-floor positioning mode Pr **19.08** shows the distance from the actual selected speed to creep speed.

The direct-to-floor positioning mode uses as a reference the selected speed and profile settings (deceleration ramp Pr **2.21** and run jerk Pr **19.15**) to calculate and display the calculated deceleration distance in Pr **19.08**, the stopping distance in Pr **19.05** is not used as the drive will be stopped directly.

The measured deceleration distance is displayed after every travel in Pr **19.10**.

Parameter	Description
Pr **2.21**	Deceleration rate
Pr **18.02**	Remaining deceleration distance (direct-to-floor)
Pr **19.05**	Stopping distance
Pr **19.10**	Actual deceleration distance moved (direct-to-floor)
Pr **19.15**	Run jerk
Pr **20.13**	Enable direct-to-floor

19.09	**Speed at floor sensor correction active**															
Variants	Unidrive SP, Unidrive ES, Digitax ST															
Drive modes	Closed-loop vector, Servo															
Coding	Bit	Txt	VM	RO	US	RW										
				1												
Range	Closed-loop vector, Servo						0 to 32,767 (mm/s)									
Default	Closed-loop vector, Servo						0									
Linked to																
Update rate	4 ms read															

This parameter displays the speed of the elevator when the floor sensor correction becomes active. If the stopping distance is to low or the floor sensor signal is given at too high a speed (Pr **18.19**), it is possible that the elevator may not stop smoothly and a hard stop occurs.

Parameter	Description
Pr **18.09**	Remaining floor sensor correction distance
Pr **18.19**	Floor sensor correction target distance
Pr **19.42**	Enable floor sensor correction
Pr **20.05**	Time from floor sensor correction active to stop
Pr **20.14**	Floor sensor correction input _ drive control terminal

19.10	**Measured deceleration distance**															
Variants	Unidrive SP, Unidrive ES, Digitax ST															
Drive modes	Closed-loop vector, Servo															
Coding	Bit	Txt	VM	RO	US	RW										
				1												
Range	Closed-loop vector, Servo						0 to 32,767 (mm)									
Default	Closed-loop vector, Servo						0									
Linked to																
Update rate	4 ms read															

This parameter shows the actual measured deceleration distance before the controlled stopping distance (Pr **19.05**). This value is the deceleration distance for the applied speed.

Parameter	Description
Pr **2.21**	Deceleration rate
Pr **18.02**	Remaining deceleration distance (direct-to-floor)
Pr **19.05**	Stopping distance
Pr **19.08**	Calculated deceleration distance (creep-to-floor), (direct-to-floor)
Pr **19.15**	Run jerk
Pr **20.13**	Enable direct-to-floor

19.11	**Variable gains transition time**															
Variants	Unidrive SP, Unidrive ES, Digitax ST															
Drive modes	Closed-loop vector, Servo															
Coding	Bit	Txt	VM	RO	US	RW										
					1	1										
Range	Closed-loop vector, Servo						0 to 32,767 (ms)									
Default	Closed-loop vector, Servo						1000									
Linked to																
Update rate	4 ms read															

This parameter defines the transition time for the variable speed loop and current loop gains along with the current loop filter. The time set here is active following drive enable and during the Start only. The transition of the gains plus filters can be controlled by either a defined time, or by using a pre-defined speed. To select between the two methods the following settings are required,

Timed transition = Pr **19.11** > 0 (value defines time period in ms)

Speed transition = Pr **19.11** = 0 (Pr **20.29** = defines end speed in mm/s for transition)

Parameter	Description
Pr **18.48**	= On (1) Enable separate start – travel gains + filters
Pr **19.48**	= On (1) Enable separate start – travel – stop gains + filters
Pr **20.29**	Speed mm/s for “speed transition”

19.11	**Variable stator resistance transition time**															
Variants	Unidrive SP, Unidrive ES, Digitax ST															
Drive modes	Open loop															
Coding	Bit	Txt	VM	RO	US	RW										
					1	1										
Range	Open loop						0 to 32,767									
Default	Open loop						1000									
Linked to																
Update rate	4 ms read															

This parameter defines the time taken for the variable motor stator resistance control to be carried out in Open loop mode. The time set here is active following drive enable Pr **18.48**.

Parameter	Description
Pr **5.17**	Start stator resistance (optimum value for start)
Pr **18.48**	Enable variable stator resistance
Pr **21.12**	Stop stator resistance (autotune value)

Excessive values of motor stator resistance in Pr **5.17** used during the start can result in heating of the motor.

19.12	**Kd gain start locking**															
Variants	Unidrive SP, Unidrive ES, Digitax ST															
Drive modes	Closed-loop vector, Servo															
Coding	Bit	Txt	VM	RO	US	RW										
					1	1										
Range	Closed-loop vector, Servo						0 to 65,535									
Default	Closed-loop vector, Servo						0									
Linked to																
Update rate	4 ms read															

With both gearless lifts and planetary gears, a position controller is particularly suitable for the start as this prevents any movement of the motor during brake opening. The position controller is made up of a both a Kp proportional (Pr **19.20**) and Kd derivative term (Pr **19.12**).The start locking feature attempts to hold the car in position during opening of the brake and is only active while the brake is being opened. Once the motor starts the position controller then becomes inactive.

The settings are limited by the stiffness of the speed loop gains, which are determined essentially by the speed feedback device being used (SinCos encoders being far superior (higher resolution) to standard incremental encoders or resolvers).

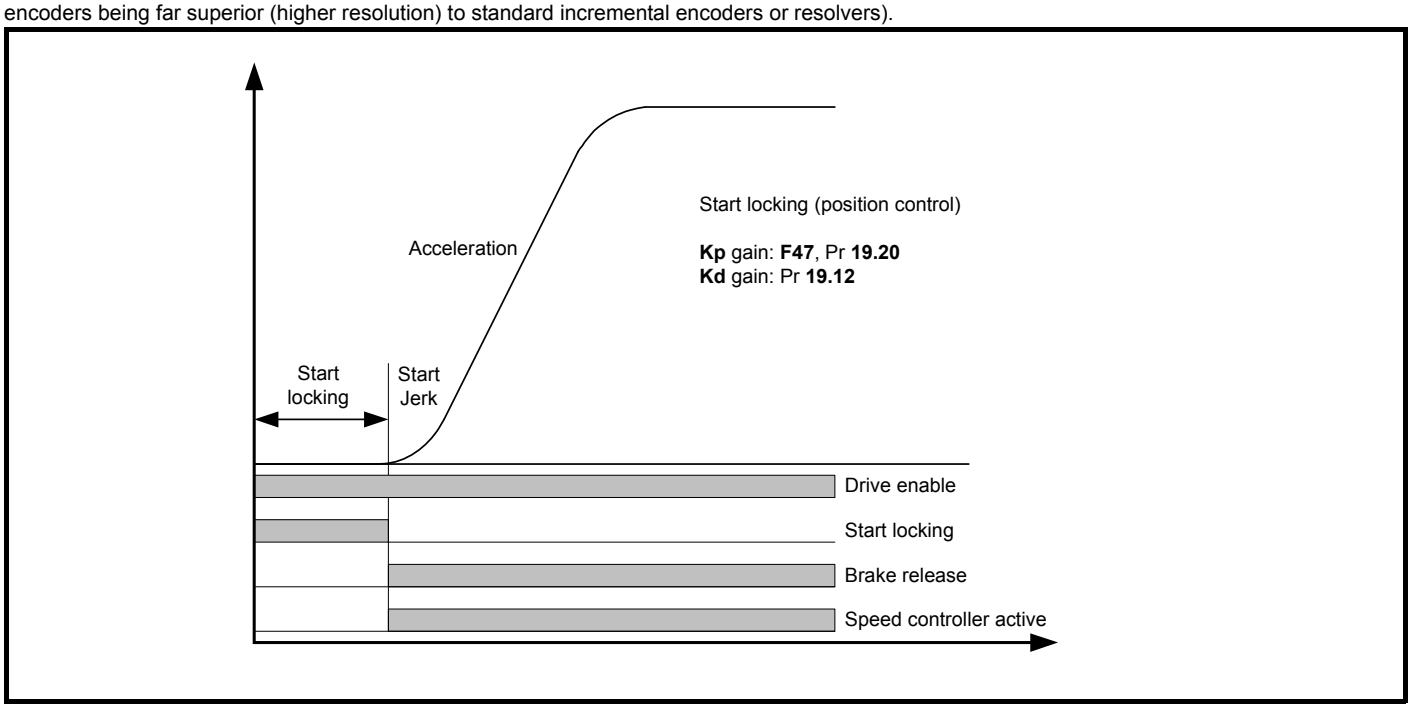

The start locking feature is adjusted following the optimization of the speed loop gains. It is important to note that the speed loop start gains (Kp **18.27**, Ki **18.28**) must be set-up correctly with the Ki integral gain the most critical (increase to the highest value, note motor vibration and acoustic noise indicate excessive value). Following set-up of the speed loop gains if required the start locking can be optimized with the Kd (Pr **19.12**) being the most critical.

Parameter	Description
Pr **19.20**	Kp gain, > 0 the car is always pulled back into position during opening the brake Recommended setting from 3 to 30.
Pr **19.12**	Kd gain, counteracts a detectably quick change of position and performs more minor compensation Recommended setting from 10 to 100.

19.13	**Stop deceleration**															
Variants	Unidrive SP, Unidrive ES, Digitax ST															
Drive modes	Open-loop, Closed-loop vector, Servo															
Coding	Bit	Txt	VM	RO	US	RW										
					1	1										
Range	Open-loop, Closed-loop vector, Servo						0 to 2000 (mm/s^2)									
Default	Open-loop, Closed-loop vector, Servo						1000									
Linked to																
Update rate	4 ms read															

The stop deceleration rate is used during the final deceleration from Creep speed operation to stop. This deceleration rate applies to the standard creep-to-floor operation and also includes floor sensor correction control. Prior to the stop deceleration there is the run jerk followed by the stop deceleration and then the final stop jerk.

Parameter	Description
Pr **19.15**	Run jerk
Pr **19.16**	Stop jerk

This deceleration rate is not required and not used for the direct-to-floor positioning.

19.14	**Start jerk**															
Variants	Unidrive SP, Unidrive ES, Digitax ST															
Drive modes	Open-loop, Closed-loop vector, Servo															
Coding	Bit	Txt	VM	RO	US	RW										
					1	1										
Range	Open-loop, Closed-loop vector, Servo						0 to 10,000 (mm/s^3)									
Default	Open-loop, Closed-loop vector, Servo						500									
Linked to	F**34**															
Update rate	4 ms read															

Also refer to Pr **19.47**, Pr **20.36** jerk at end of acceleration.

19.15	**Run jerk**															
Variants	Unidrive SP, Unidrive ES, Digitax ST															
Drive modes	Open-loop, Closed-loop vector, Servo															
Coding	Bit	Txt	VM	RO	US	RW										
					1	1										
Range	Open-loop, Closed-loop vector, Servo						0 to 10,000 (mm/s^3)									
Default	Open-loop, Closed-loop vector, Servo						1000									
Linked to	F**35**															
Update rate	4 ms read															

Also refer to Pr **19.47**, Pr **20.36** jerk at end of acceleration.

19.16	**Stop jerk**															
Variants	Unidrive SP, Unidrive ES, Digitax ST															
Drive modes	Open-loop, Closed-loop vector, Servo															
Coding	Bit	Txt	VM	RO	US	RW										
					1	1										
Range	Open-loop, Closed-loop vector, Servo						0 to 10,000 (mm/s^3)									
Default	Open-loop, Closed-loop vector, Servo						800									
Linked to	F**36**															
Update rate	4 ms read															

Also refer to stop deceleration in Pr **19.13**

19.17	**Jerk for start optimizer**															
Variants	Unidrive SP, Unidrive ES, Digitax ST															
Drive modes	Open-loop, Closed-loop vector, Servo															
Coding	Bit	Txt	VM	RO	US	RW										
					1	1										
Range	Open-loop, Closed-loop vector, Servo						0 to 10,000 (mm/s^3)									
Default	Open-loop Closed-loop vector, Servo						400 10									
Linked to																
Update rate	4 ms read															

The start optimizer can be used to overcome starting difficulties or static friction in the elevator system which is a result of for example, a rucksack mechanical arrangement, an elevator with pads in place of rollers, or due to a geared elevator system where compensation is required for the gearbox.

The start optimizer software function is activated by setting a time for start optimizer in parameter Pr **19.28** > 0.

Parameter	Description
Pr **18.18**	Speed setting for start optimization Recommended settings from 2 . . . 5 mm/s
Pr **19.17**	Jerk setting for start optimization Recommended settings from 10 . . . 20 (Must be smaller than start jerk)
Pr **19.28**	Time for start optimization and enable > 0 Recommended settings from 500 . . . 800 ms

The default setting of jerk for the start optimizer is acceptable for most applications. On completion of the optimized start, the normal start jerk parameter Pr **19.14** is active as the elevator then follows the standard velocity profile.

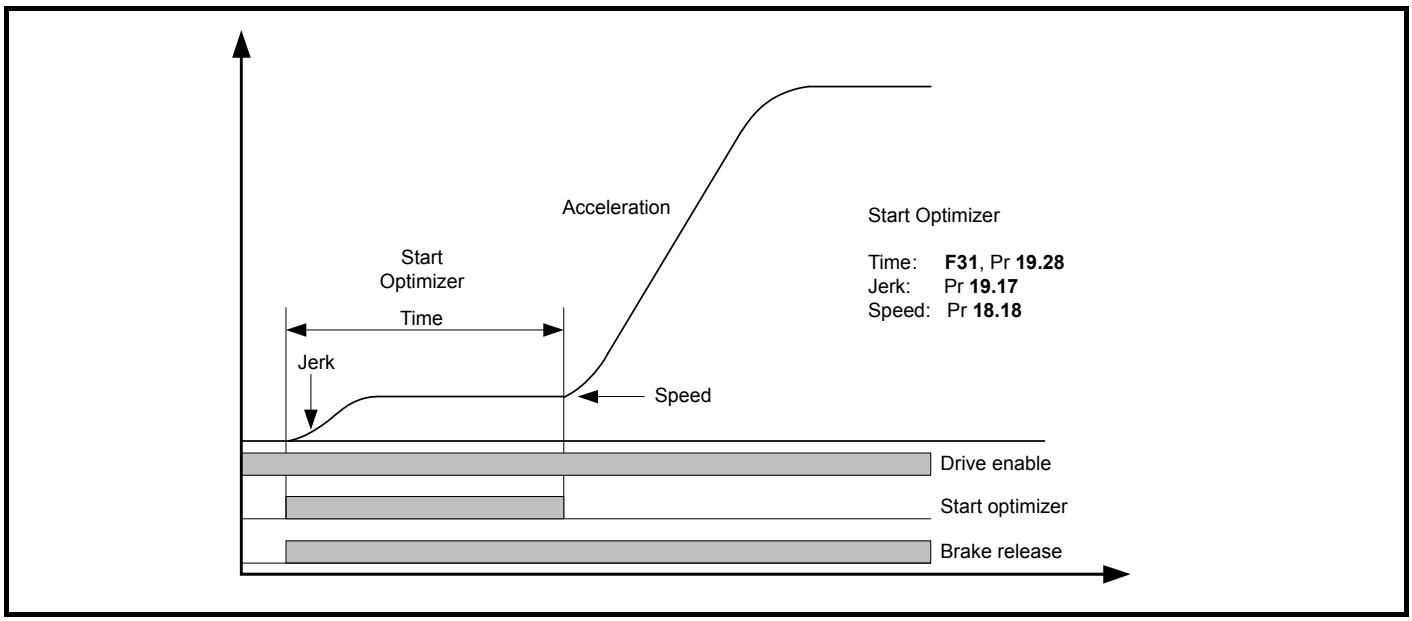

If the target speed set in Pr **18.18** is not reached during the time defined in Pr **19.28** there will be a continuous transition to the nominal acceleration using the start jerk Pr **19.14.**

19.18	**Maximum distance error threshold**															
Variants	Unidrive SP, Unidrive ES, Digitax ST															
Drive modes	Open-loop, Closed-loop vector, Servo															
Coding	Bit	Txt	VM	RO	US	RW										
					1	1										
Range	Open-loop, Closed-loop vector, Servo						0 to 10,000 (mm)									
Default	Open-loop, Closed-loop vector, Servo						100									
Linked to																
Update rate	4 ms read															

The distance error is the integral of the difference between the ramp speed Pr **19.03** and the actual speed of the motor Pr **19.02** in mm/s and is compared with the maximum allowed distance error threshold set in Pr **18.18**.

If the distance error exceeds this threshold, a t071 trip is generated. The distance error during one travel is displayed in Pr **18.06** independent of the activation of the error detection. The display is reset to 0 at each start. The maximum distance error detection is disabled by setting Pr **19.18** = 0.

Parameter	Description
Pr **18.06**	Maximum distance error (Trip t071)
Pr **19.02**	Actual speed
Pr **19.03**	Ramps speed

NOTE

Disabling the maximum distance error detection can result in incorrect operation and the elevator car not positioning correctly due to for example a mechanical issue with the elevator system.

19.19	**Inertia compensation scaling**															
Variants	Unidrive SP, Unidrive ES, Digitax ST															
Drive modes	Open-loop, Closed-loop vector, Servo															
Coding	Bit	Txt	VM	RO	US	RW										
					1	1										
Range	Open-loop, Closed-loop vector, Servo						0 to 32,767 (0.1 %)									
Default	Open-loop, Closed-loop vector, Servo						1000									
Linked to																
Update rate	4 ms read															

The inertia compensation reference from Pr **19.04** is routed directly to Pr **4.09** once enabled with Pr **18.49** = 1 (torque level for compensation visible in Pr **18.08**). User adjustment of the inertia compensation can be applied using Pr **19.19** scaling this is adjusted with half load present in the elevator and with a target of maintaining a constant speed loop output Pr **3.04**.

The inertia compensation scaling can be calculated from the mechanical data as follows:

Pr **19.19** = 1000 x (**JG** x **i**) / (**MN** x **R**)

JG Inertia of the system in kgm^2 applied to the motor shaft
MN Rated motor torque in Nm
R Radius of the sheave in m
i Gear ratio

Parameter	Description
Pr **4.09**	Final torque offset
Pr **4.10**	Enable software compensation
Pr **18.08**	Torque level for compensation
Pr **18.49**	Enable inertia compensation
Pr **19.04**	Reference acceleration

Figure 7-6 Inertia compensation reference

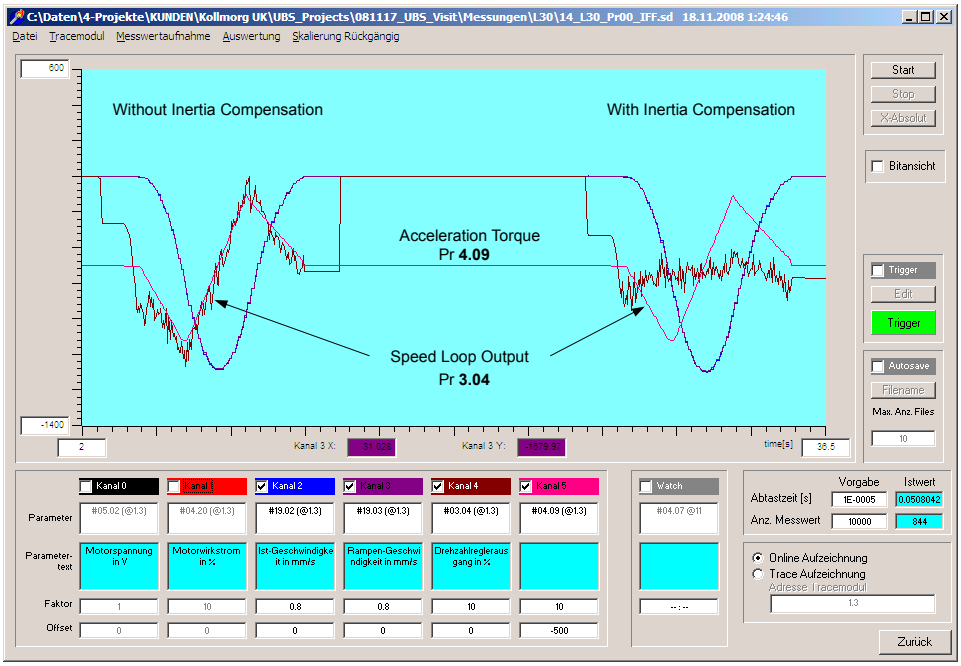

The scaling in Pr **19.19** should be adjusted so that Pr **4.09** the acceleration torque follows the speed controller output in Pr **3.04.** This results in a nearly constant speed controller output, Pr **3.04** as shown above when the torque feed forward Pr **4.09** is enabled with Pr **04.10** = 1.

19.20	**Kp gain start locking**															
Variants	Unidrive SP, Unidrive ES, Digitax ST															
Drive modes	Closed-loop vector, Servo															
Coding	Bit	Txt	VM	RO	US	RW										
					1	1										
Range	Closed-loop vector, Servo						0 to 65,535									
Default	Closed-loop vector, Servo						10									
Linked to	F**47**															
Update rate	4 ms read															

With both gearless lifts and planetary gears a position controller is particularly suitable for the Start this prevents any movement of the motor during brake opening. The position controller is made up of a both a Kp proportional (Pr **19.20**) and Kd derivative term (Pr **19.12**).The start locking feature attempts to hold the car in position during opening of the brake and is only active while the brake is being opened. Once the motor starts the position controller then becomes inactive.

The set values are limited by the stiffness of the speed loop gains, which are determined essentially by the speed feedback device being used (SinCos encoders being far superior (higher resolution) to standard incremental encoders or resolvers).

Figure 7-7 Start locking position control

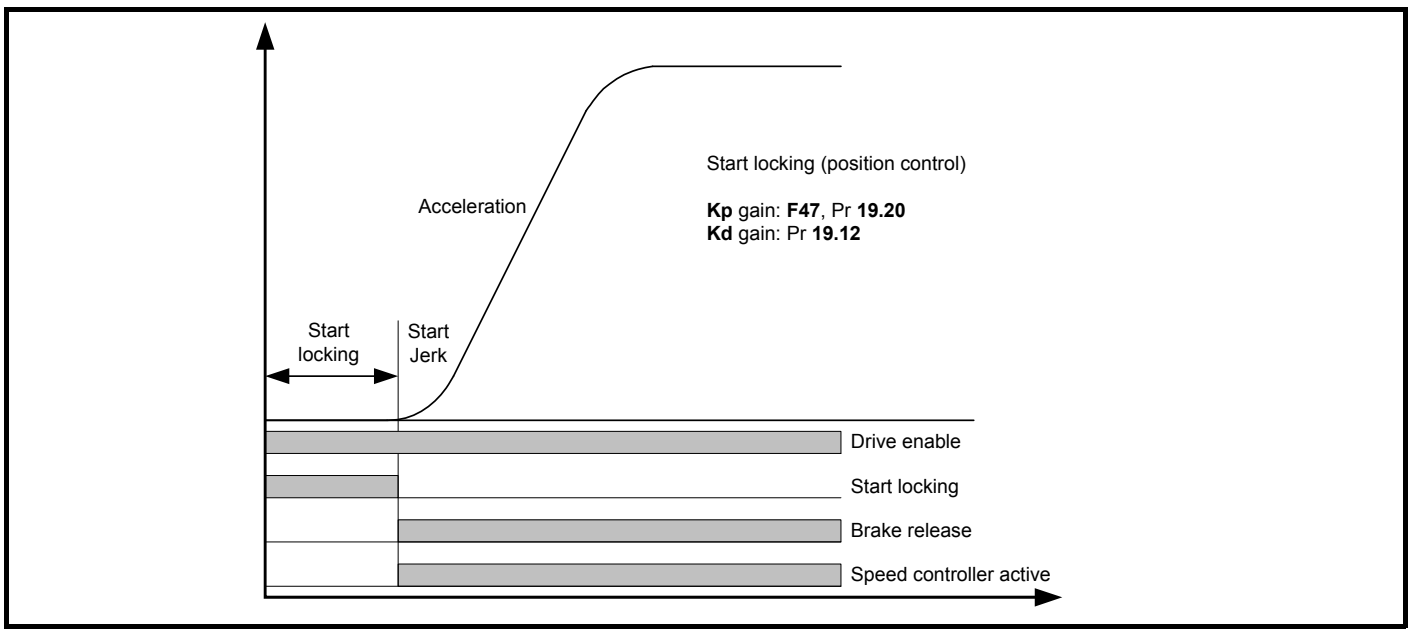

The start locking feature is adjusted following the optimization of the speed loop gains. It is important to note that the speed loop start gains (Kp **18.27**, Ki **18.28**) must be set-up correctly with the Ki integral gain the most critical (increase to the highest value, note motor vibration and acoustic noise indicate excessive value). Following set-up of the speed loop gains if required the start locking can be optimized with the Kd (Pr **19.12**) being the most critical.

Parameter	Description
Pr **19.20**	Kp gain, > 0 the car is always pulled back into position during opening the brake Recommended setting from 3 to 30.
Pr **19.12**	Kd gain, counteracts a detectably quick change of position and performs more minor compensation Recommended setting from 10 to 100.

19.21	**Load measurement scaling**															
Variants	Unidrive SP, Unidrive ES, Digitax ST															
Drive modes	Open-loop, Closed-loop vector, Servo															
Coding	Bit	Txt	VM	RO	US	RW										
					1	1										
Range	Open-loop, Closed-loop vector, Servo						± 32,767 (0.1 %)									
Default	Open-loop, Closed-loop vector, Servo						1000									
Linked to																
Update rate	4 ms read															

The load measurement scaling is used to scale the feedback from the external load measurement device to the drive and Elevator Solution Software.

Parameter	Description
Pr **18.46**	Enable load cell compensation

Refer to Pr **18.46** for further detailed information

19.22	**Offset load measurement**															
Variants	Unidrive SP, Unidrive ES, Digitax ST															
Drive modes	Open-loop, Closed-loop vector, Servo															
Coding	Bit	Txt	VM	RO	US	RW										
					1	1										
Range	Open-loop, Closed-loop vector, Servo						± 32,767 (0.3125 mV)									
Default	Open-loop, Closed-loop vector, Servo						0									
Linked to																
Update rate	4 ms read															

The load measurement offset can be introduced to overcome any offsets in the external load measurement device.

Parameter	Description
Pr **18.46**	Enable load cell compensation

Refer to Pr **18.46** for further detailed information

19.23	**Filter time constant for load measurement**															
Variants	Unidrive SP, Unidrive ES, Digitax ST															
Drive modes	Open-loop, Closed-loop vector, Servo															
Coding	Bit	Txt	VM	RO	US	RW										
					1	1										
Range	Open-loop, Closed-loop vector, Servo						± 32,767 ms									
Default	Open-loop, Closed-loop vector, Servo						100									
Linked to																
Update rate	4 ms read															

The load measurement filter time constant can be introduced to prevent unstable values from the load measurement device generated unstable operation.

Parameter	Description
Pr **18.46**	Enable load cell compensation

19.24	**Maximum speed error threshold (mm/s)** **Maximum current limit time (ms)**															
Variants	Unidrive SP, Unidrive ES, Digitax ST															
Drive modes	Open-loop, Closed-loop vector, Servo															
Coding	Bit	Txt	VM	RO	US	RW										
					1	1										
Range	Open-loop, Closed-loop vector, Servo						0 to 10,000									
Default	Closed-loop vector, Servo Open-loop						100 2000									
Linked to																
Update rate	4 ms read															

The maximum speed error is calculated from the difference between the ramp speed Pr **19.03** and the actual speed of the motor Pr **19.02** in mm/s for closed loop mode. For **closed loop** operation Pr **19.24** = maximum speed error mm/s.

The internally calculated maximum speed error is compared with the threshold set in Pr **19.24** if the threshold is exceeded for > 100 ms a t070 trip is generated. The maximum speed error detection can be disabled by setting Pr **19.24** = 0 for closed loop mode. The maximum speed error during the travel is displayed in Pr **18.07** independent of the activation of the speed error detection. The display is reset to 0 at each start.

For open loop mode the speed error is detected and a trip generated when operation in current limit (Pr **10.09** = On) exceeds the allowable time set in Pr **19.24**. Pr **19.24** in open loop mode = allowable time to operate in current limit. The maximum speed error detection for open loop mode can be disabled by setting a large value in Pr **19.24**.

NOTE

Disabling the maximum speed error detection can result in incorrect operation with the constant speed of the elevator not being maintained for example due to a mechanical issue with the elevator, or induced noise present on the speed feedback with a closed loop system.

19.25	**Brake release delay**															
Variants	Unidrive SP, Unidrive ES, Digitax ST															
Drive modes	Open-loop, Closed-loop vector, Servo															
Coding	Bit	Txt	VM	RO	US	RW										
					1	1										
Range	Open-loop, Closed-loop vector, Servo						0 to 10,000 ms									
Default	Open-loop, Closed-loop vector, Servo						500									
Linked to	F**37**															
Update rate	4 ms read															

Brake control using drive

In the default setting of the Elevator Solution Software a brake controller is configured to provide a brake release output signal on control terminal T25 of the drive, Pr **8.22** = 18.31 (brake control output signal Pr **18.31**). This parameter holds the mechanical time taken for the brake to be released. The brake release delay time is adjusted using Pr **19.25**. The brake output becomes active once the motor magnetized state is reached (Pr **18.43** motor magnetized), threshold defined in Pr **18.23**.

If a drive trip occurs at any stage the brake control will become inactive and the brake will be forced to close by the elevator controller.

Brake control using elevator controller

If the elevator controller is carrying out the brake control, control terminal T25 on the drive can now be reconfigured. To ensure the same performance using the brake control of the elevator controller an output with function Pr **18.43** (motor magnetized) should be used.

Parameter	Description
Pr **18.23**	Magnetization threshold
Pr **18.24**	Brake apply delay
Pr **18.31**	Brake control output
Pr **18.43**	Motor magnetised

19.26	**Direction input configuration**															
Variants	Unidrive SP, Unidrive ES, Digitax ST															
Drive modes	Open-loop, Closed-loop vector, Servo															
Coding	Bit	Txt	VM	RO	US	RW										
	1				1	1										
Range	Open-loop, Closed-loop vector, Servo						-1 to 4									
Default	Open-loop, Closed-loop vector, Servo						0									
Linked to	F**02**															
Update rate	Background read															

This parameter allows the user to define the number of direction inputs on the drive. At default the drive has a single direction input on control terminal T28, when selecting dual direction inputs Pr **19.26** = 1 the drive is configured for two direction inputs on control terminal T27 and T28. Using Pr **19.26** the control interface type can be selected as follows:

Pr **19.26 = -1**Terminal control + 1 Direction + priority “1 of n” speed selection.

Pr 19.26 = -1 single direction input	
T28	Pr **18.44** = OFF (0) clockwise rotation demanded
	Pr **18.44** = On (1) counter clockwise rotation demanded

Pr **19.26 = 0**Terminal control + 1 Direction + binary speed selection.

Pr 19.26 = 0 single direction input	
T28	Pr **18.44** = OFF (0) clockwise rotation demanded
	Pr **18.44** = On (1) counter clockwise rotation demanded

Pr **19.26 = 1** Terminal control + 2 Direction + binary speed selection.

Pr 19.26 = 1 dual direction inputs	
T28	Pr **18.44** = OFF (0) no counter clockwise rotation demanded
	Pr **18.44** = On (1) counter clockwise rotation demanded.
T27	Pr **19.44** = OFF (0) no clockwise rotation demand
	Pr **19.44** = On (1) clockwise rotation demanded.

Pr **19.26 = 2** Terminal control + 2 Direction + priority “1 of n” speed selection.

Pr 19.26 = 2 dual direction inputs	
T28	Pr **18.44** = OFF (0) no counter clockwise rotation demanded
	Pr **18.44** = On (1) counter clockwise rotation demanded.
T27	Pr **19.44** = OFF (0) no clockwise rotation demand
	Pr **19.44** = On (1) clockwise rotation demanded.

Pr **19.26 = 3** DCP3 Interface
creep-to-floor positioning with serial control over DCP.

Pr **19.26 = 4** DCP4 Interface
direct-to-floor positioning with serial control over DCP.

Pr **19.26** = **5** CAN open DSP417

Pr **18.45** is the invert direction this will invert the direction but will not affect Pr **18.44** display.

NOTE

For a change in the control interface to become active the following procedure must be followed:

- Store parameters in drive, Pr **x.00** = 1000 + Reset.
- Cycle the power of the drive (display should go OFF then ON with cycling of the power supply).

19.27	**Gear ratio denominator**															
Variants	Unidrive SP, Unidrive ES, Digitax ST															
Drive modes	Open-loop, Closed-loop vector, Servo															
Coding	Bit	Txt	VM	RO	US	RW										
					1	1										
Range	Open-loop, Closed-loop vector, Servo						0 to 32767									
Default	Open-loop, Closed-loop vector, Servo						1									
Linked to	F**18**															
Update rate	4 ms read															

Where the elevator has a gearbox this is the gear ratio denominator and is used along with Pr **19.30** gear ratio numerator by the rated rpm autotune (Pr **19.31**) to set-up the gearbox ratio for the calculation of the nominal elevator rpm (Pr **18.03**).

19.28	**Time for start optimizer**															
Variants	Unidrive SP, Unidrive ES, Digitax ST															
Drive modes	Open-loop, Closed-loop vector, Servo															
Coding	Bit	Txt	VM	RO	US	RW										
					1	1										
Range	Open-loop, Closed-loop vector, Servo						0 to 10,000 (ms)									
Default	Open-loop, Closed-loop vector, Servo						0									
Linked to	F**31**															
Update rate	4 ms read															

The Start optimizer can be used to overcome starting difficulties or static friction in the elevator system which is a result of for example, a rucksack mechanical arrangement, an elevator with pads in place of rollers, or due to a geared elevator system where compensation is required for the gearbox. The start optimizer software function is activated by setting a Time for start optimizer in parameter Pr **19.28** > 0.

Parameter	Description
Pr **18.18**	Speed setting for start optimization Recommended settings from 2 . . . 5 mm/s
Pr **19.17**	Jerk setting for start optimization Recommended settings from 10 . . . 20 (Must be smaller than start jerk)
Pr **19.28**	Time for start optimization and enable > 0 Recommended settings from 500 . . . 800 ms

The default setting of time for the start optimizer is acceptable for most applications. On completion of the optimized start the normal start jerk parameter Pr **19.14** is active as the elevator then follows the standard velocity profile.

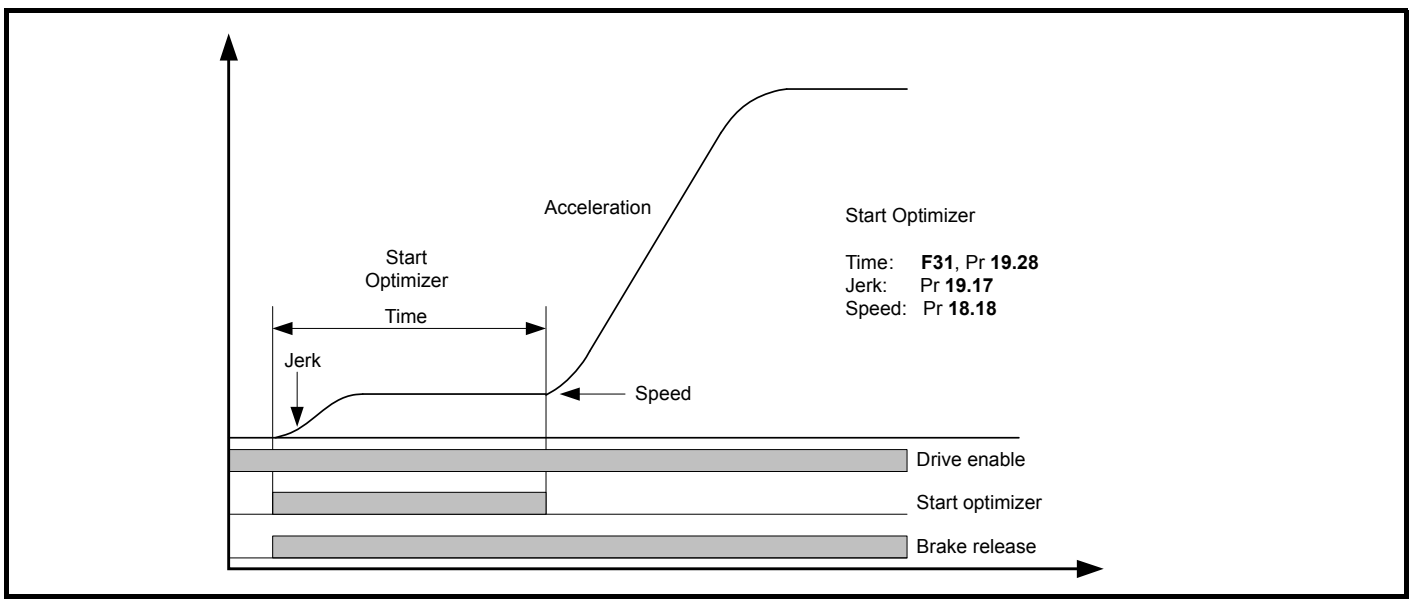

If the target speed set in Pr **18.18** is not reached during the time defined in Pr **19.28** there will be a continuous transition to the nominal acceleration using the start jerk Pr **19.14.**

19.29	**Sheave diameter**															
Variants	Unidrive SP, Unidrive ES, Digitax ST															
Drive modes	Open-loop, Closed-loop vector, Servo															
Coding	Bit	Txt	VM	RO	US	RW										
					1	1										
Range	Open-loop, Closed-loop vector, Servo						0 to 32767 (mm)									
Default	Open-loop, Closed-loop vector, Servo						480									
Linked to	F**15**															
Update rate	4 ms read															

This is the diameter of the sheave in mm and is used by the rated rpm autotune Pr **19.31**, for the calculation of the nominal elevator rpm Pr **18.03**.

19.30	**Gear ratio numerator**															
Variants	Unidrive SP, Unidrive ES, Digitax ST															
Drive modes	Open-loop, Closed-loop vector, Servo															
Coding	Bit	Txt	VM	RO	US	RW										
					1	1										
Range	Open-loop, Closed-loop vector, Servo						0 to 32767									
Default	Open-loop, Closed-loop vector, Servo						1									
Linked to	F**17**															
Update rate	4 ms read															

Where the elevator has a gearbox this is the gear ratio numerator and is used along with Pr **19.27** gear ratio denominator by the rated rpm autotune (Pr **19.31**) to set-up the gearbox ratio for the calculation of the nominal elevator rpm (Pr **18.03**).

NOTE

Pre V01.22.00 the default setting for the numerator was 31, this has now been changed to 1 to follow increasing requirements for gearless applications.

19.31	**Automatic motor nominal rpm**															
Variants	Unidrive SP, Unidrive ES, Digitax ST															
Drive modes	Open-loop, Closed-loop vector, Servo															
Coding	Bit	Txt	VM	RO	US	RW										
	1				1	1										
Range	Open-loop, Closed-loop vector, Servo						OFF (0) or On (1)									
Default	Open-loop, Closed-loop vector, Servo						On (1)									
Linked to	F**20**															
Update rate	4 ms read															

This is the rated rpm autotune, which uses the nominal elevator speed mm/s, gearbox ratio, sheave diameter and roping to calculate the nominal elevator speed in rpm for Pr **18.29**.

19.32	**Motor contactor control output**															
Variants	Unidrive SP, Unidrive ES, Digitax ST															
Drive modes	Open-loop, Closed-loop vector, Servo															
Coding	Bit	Txt	VM	RO	US	RW										
	1			1												
Range	Open-loop, Closed-loop vector, Servo						OFF (0) or On (1)									
Default	Open-loop, Closed-loop vector, Servo															
Linked to																
Update rate	4 ms read															

This parameter indicates the state of the motor contactor control output from the elevator software, OFF indicating motor contactor open, and ON motor contactor closed. By default the motor contactor control output is not configured, to set this up a digital output should be configured with the source as Pr **19.32**.

To use control terminal T22 (+24 V User Output) on the drive for the output motor contactor control set Pr **8.28** = 19.32 and Pr **8.18** = 0.

19.33	**Motor contactor feedback monitor (Trip t078)**															
Variants	Unidrive SP, Unidrive ES, Digitax ST															
Drive modes	Open-loop, Closed-loop vector, Servo															
Coding	Bit	Txt	VM	RO	US	RW										
	1			1												
Range	Open-loop, Closed-loop vector, Servo						OFF (0) or On (1)									
Default	Open-loop, Closed-loop vector, Servo															
Linked to																
Update rate	4 ms read															

This parameter shows the motor contactor control state as released (On) or closed (OFF) following a control sequence.

The contactor release monitoring according to EN81 can be implemented. To activate the monitoring a digital input T24 to T29 of the drive has to be assigned to this function by setting Pr **8.2x =** 19.33. The digital input terminal is monitored to be “ON” (+24 V) when contactors are released and to be “OFF” (0 V), when contacts are closed.

If the motor contactor control feedback does not follow the correct sequence within 3 s of the contactor control signal Pr **19.32** a t078 trip will be generated. The t078 trip will be generated either after the travel has completed or when the drive is inhibited. This function can be tested by interrupting the contactor release signal during standstill for > 3 s.

19.34	**Brake feedback 1 monitoring (Trip t083)**															
Variants	Unidrive SP, Unidrive ES, Digitax ST															
Drive modes	Open-loop, Closed-loop vector, Servo															
Coding	Bit	Txt	VM	RO	US	RW										
	1			1	1											
Range	Open-loop, Closed-loop vector, Servo						OFF (0) or On (1)									
Default	Open-loop, Closed-loop vector, Servo															
Linked to																
Update rate	4 ms read															

Monitoring of two mechanical brake feedback signals is possible with elevator software version ≥ **V01.22.00**. To activate the brake contact monitoring this requires one or two digital inputs from T24 to T29 on the drive set-up as follows Pr **8.2X =** 19.34 (for Brake contact one) and / or Pr **8.2x =** 19.36 (for Brake contact two)**.**

The digital input terminal(s) are monitored and must follow the brake output state in Pr **18.31** if the feedback state does not follow within the Brake release delay Pr **19.25** or Brake apply delay Pr **18.24** the drive will generate a **t083** trip.

If the state of the activated brake monitoring contact(s) do not follow the brake control output within 3 s a trip t083 will be generated. If one contact is missing, the t083 trip will be generated at the next stop. If both contacts do not follow the correct sequence the t083 trip will be generated immediately.

Pre Elevator Solution Software V01.22.00

Prior to Elevator Solution Software V01.22.00 a constant current filter could be selected with Pr **19.34** (Pr **4.12** current filter active for complete travel). Current filters (Pr **4.12** run, Pr **4.23** start and Pr **21.16** stop) are now selected through configuration of Pr **18.48** and Pr **19.48**.

19.35	**Thermistor over-temperature**															
Variants	Unidrive SP, Unidrive ES, Digitax ST															
Drive modes	Open-loop, Closed-loop vector, Servo															
Coding	Bit	Txt	VM	RO	US	RW										
	1			1												
Range	Open-loop, Closed-loop vector, Servo						OFF (0) or On (1)									
Default	Open-loop, Closed-loop vector, Servo															
Linked to																
Update rate	4 ms read															

This parameter displays the level of the motor temperature from the motor thermistor connected to analog input 3, if programmed with function ***th.disp***. By default Pr **19.35** = OFF when Pr **19.35** = On this indicates that the motor thermistor is > 33 % (equating to > 3.3 kΩ). This can be used to provide the elevator controller with a motor thermal status output during operation without stopping the elevator.

Once an over temperature condition has been identified by the elevator software the elevator will complete the travel, once completed and the drive enable is removed a th trip will be generated.

An extension of the standard drive motor thermistor control input is present in elevator software ≥ **V01.22.00**. This motor thermistor control has a Programmable TH threshold in Pr **71.57** with 33 % default as for the standard drive. The reaction on the thermistor is defined by the drive, i.e. trip level at 3.3 kΩ, reset level at 1.5 kΩ.

19.36	**Brake feedback 2 monitoring (Trip t083)**															
Variants	Unidrive SP, Unidrive ES, Digitax ST															
Drive modes	Open-loop, Closed-loop vector, Servo															
Coding	Bit	Txt	VM	RO	US	RW										
	1			1	1											
Range	Open-loop, Closed-loop vector, Servo						OFF (0) or On (1)									
Default	Open-loop, Closed-loop vector, Servo															
Linked to																
Update rate	4 ms read															

Monitoring of two mechanical brake feedback signals is possible with elevator software version **≥ V01.22.00**. To activate the brake contact monitoring this requires one or two digital inputs from T24 to T29 on the drive set-up as follows Pr **8.2x = 19.36** (for Brake contact two) and / or Pr **8.2x = 19.34** (for Brake contact one)**.**

The digital input terminal(s) are monitored and must follow the brake output state in Pr **18.31** if the feedback state does not follow within the Brake release delay Pr **19.25** or Brake apply delay Pr **18.24** the drive will generate a **t083** trip.

If the state of the activated brake monitoring contact(s) do not follow the brake control output within 3s a trip t083 will be generated. If one contact is missing, the t083 trip will be generated at the next stop. If both contacts do not follow the correct sequence the t083 trip will be generated immediately.

19.37	**Load direction, last measured**															
Variants	Unidrive SP, Unidrive ES, Digitax ST															
Drive modes	Open-loop, Closed-loop vector, Servo															
Coding	Bit	Txt	VM	RO	US	RW										
	1			1												
Range	Open-loop, Closed-loop vector, Servo						OFF (0) or On (1)									
Default	Open-loop, Closed-loop vector, Servo						OFF (0)									
Linked to																
Update rate	4 ms read															

This parameter displays the direction of the load as either On (1) or OFF (0) from the load measurement carried out during the last start (Pr **20.08** > 0). The direction of the load is displayed in Pr **19.37**, this should be provided as an output signal via a programmable digital output Pr **8.xx = 19.37** to the elevator controller to use as the direction of operation with least load. This feature allows the UPS power supply to be efficiently sized for emergency rescue.

The direction of the load can be inverted Pr **19.39** = 1.

Parameter	Description
Pr **19.39**	Invert load direction
Pr **20.08**	Load measurement time
Pr **20.19**	Load measurement value

The load measurement is carried out to assist in the emergency evacuation operation allowing movement to be carried out in the direction of least load.

19.38	**Emergency rescue enable**															
Variants	Unidrive SP, Unidrive ES, Digitax ST															
Drive modes	Open-loop, Closed-loop vector, Servo															
Coding	Bit	Txt	VM	RO	US	RW										
	1				1	1										
Range	Open-loop, Closed-loop vector, Servo						OFF (0) or On (1)									
Default	Open-loop, Closed-loop vector, Servo						OFF (0)									
Linked to																
Update rate	4 ms read															

This parameter is used to enable the emergency rescue and is implemented using a digital input from the elevator controller to the drive via the control terminals and routed to Pr **19.38**. When Pr **19.38** = On (1) the following parameter configuration is also carried out to prevent a UPS system overload in an emergency rescue situation.

Parameter	Description
Pr **4.07**	Current limit controlled
Pr **19.12**	Disable start locking, Kd gain = 0
Pr **19.20**	Disable start locking, Kp gain = 0
Pr **19.18**	Disable distance error detection, threshold set = 0
Pr **19.24**	Disable speed error detection, threshold set = 0
Pr **19.28**	Disable Start optimizer, time set = 0
Pr **20.15**	UPS maximum power control set-point
Pr **20.08**	Load measurement disabled, time set = 0

To protect the UPS from overloading and switching into standby, DC bus voltage control of the current limits is activated with Pr **19.38** = On.

If the DC bus voltage decreases below the UU Reset voltage + 60 V (= 510 V for 400 V drives), the current limit will be decreased linearly from the nominal set value to Pr **21.28** at low load and 510 Vdc linearly to the reduced value in Pr **21.29** at full load, 450 Vdc. Further the speed is also controlled to prevent exceeding the power set-point in Pr **20.15** in W. This function can be disabled by starting the drive with Pr **19.38** = OFF disabled.

19.39	**Load direction invert**															
Variants	Unidrive SP, Unidrive ES, Digitax ST															
Drive modes	Open-loop, Closed-loop vector, Servo															
Coding	Bit	Txt	VM	RO	US	RW										
	1				1	1										
Range	Open-loop, Closed-loop vector, Servo						OFF (0) or On (1)									
Default	Open-loop, Closed-loop vector, Servo						OFF (0)									
Linked to																
Update rate	4 ms read															

This parameter allows the direction of the load derived during the start (Pr **20.08** > or < 0) and displayed in Pr **19.37** (On (1) or OFF (0)) to be inverted.

Parameter	Description
Pr **19.37**	Direction of load
Pr **20.08**	Load measurement time
Pr **20.19**	Load measurement value

19.40	**Enable motor contactor monitor (Trip t078)**															
Variants	Unidrive SP, Unidrive ES, Digitax ST															
Drive modes	Open-loop, Closed-loop vector, Servo															
Coding	Bit	Txt	VM	RO	US	RW										
	1				1	1										
Range	Open-loop, Closed-loop vector, Servo						OFF (0) or On (1)									
Default	Open-loop, Closed-loop vector, Servo						OFF (0)									
Linked to																
Update rate	4 ms read															

If this parameter is set to On with software version < V01.22.00 the Elevator Solution Software expects output motor contactor feedback in Pr **19.33**.

If the monitoring is enabled and the output motor contactor feedback is not present as expected in Pr **19.33** a t078 trip will be generated. The output motor contactor feedback is routed to Pr **19.33** using a drives digital input.

NOTE

For software versions ≥ V01.22.00 routing a digital input to Pr **19.33** will automatically enable the motor contactor monitor function, Pr **19.40** is no longer used.

19.41	**Reference select Bit 7**															
Variants	Unidrive SP, Unidrive ES, Digitax ST															
Drive modes	Open-loop, Closed-loop vector, Servo															
Coding	Bit	Txt	VM	RO	US	RW										
	1				1	1										
Range	Open-loop, Closed-loop vector, Servo						OFF (0) or On (1)									
Default	Open-loop, Closed-loop vector, Servo						OFF (0)									
Linked to																
Update rate	4 ms read															

This parameter is used to select the seventh speed when operating with priority speed selection. Priority speed selection (1 of n), selected with Pr **18.42** = On.

19.42	**Enable floor sensor correction**															
Variants	Unidrive SP, Unidrive ES, Digitax ST															
Drive modes	Closed-loop vector, Servo															
Coding	Bit	Txt	VM	RO	US	RW										
	1				1	1										
Range	Closed-loop vector, Servo						OFF (0) or On (1)									
Default	Closed-loop vector, Servo						OFF (0)									
Linked to																
Update rate	4 ms read															

Independent of the selected profile additional floor sensor correction can be utilized. Improved accurate distance correction is possible if a floor sensor can be detected in the range of 50 to 500 mm before the flush or level with floor target position.

Floor sensor correction should be used with direct-to-floor positioning on elevators with speeds in excess of 1 m/s. This provides maximum accuracy. To enable floor sensor correction, the following parameters should be set up:

Parameter	Description
Pr **18.09**	Remaining floor sensor correction distance
Pr **18.19**	Floor sensor correction target distance
Pr **19.09**	Speed at floor sensor correction active
Pr **20.05**	Time from floor sensor correction active to stop
Pr **20.14**	Floor sensor correction input _ drive control terminal

19.43	**Enable motor phase loss detection (Trip t077)**															
Variants	Unidrive SP, Unidrive ES, Digitax ST															
Drive modes	Open-loop, Closed-loop vector, Servo															
Coding	Bit	Txt	VM	RO	US	RW										
	1				1	1										
Range	Open-loop, Closed-loop vector, Servo						OFF (0) or On (1)									
Default	Open-loop, Closed-loop vector, Servo						OFF (0)									
Linked to																
Update rate	4 ms read															

The elevator software has a motor phase loss detection function which can be enabled using this parameter for Open loop, Closed loop vector and Servo mode. If a phase loss error is detected, the drive will trip t077.

In Closed loop modes this feature monitors the motor voltage during the start and if during the start, and after 200 ms, more than 66 % of the nominal motor voltage required is not present the t077 trip is generated. This detection is only active in Closed loop Servo (Servomotor with encoder) or Closed loop vector (Induction motor with encoder). The detection is active from the start up to 10 % of the nominal speed. If the output voltage does not exceed the internal threshold within 200 ms the trip is generated.

In Open loop mode the Ur_S mode is used to detect the motor phase loss during start.

The default setting for this detection is Pr **19.43** = OFF phase lost detection in-active.

19.44	**Direction input 2 CW**															
Variants	Unidrive SP, Unidrive ES, Digitax ST															
Drive modes	Open-loop, Closed-loop vector, Servo															
Coding	Bit	Txt	VM	RO	US	RW										
	1			1												
Range	Open-loop, Closed-loop vector, Servo						OFF (0) or On (1)									
Default	Open-loop, Closed-loop vector, Servo						OFF (0)									
Linked to																
Update rate	4 ms read															

This parameter displays the direction selected (CW = clock wise) using the drives digital inputs and dual direction inputs selected Pr **19.26** = 1.

Pr 19.26 = 0 single direction input
Pr **18.44** = OFF (0) clockwise rotation demanded.
Pr **18.44** = On (1) counter clockwise rotation demanded.
Pr 19.26 = 1 dual direction inputs
Pr **18.44** = OFF (0) no counter clockwise rotation demanded.
Pr **18.44** = On (1) counter clockwise rotation demanded.
Pr **19.44** = OFF (0) no clockwise rotation demand.
Pr **19.44** = On (1) clockwise rotation demanded.

Pr **18.45** is the invert direction this will invert the direction but will not affect Pr **19.44** display.

19.45	**Enable blocked elevator releasing**															
Variants	Unidrive SP, Unidrive ES, Digitax ST															
Drive modes	Open-loop, Closed-loop vector, Servo															
Coding	Bit	Txt	VM	RO	US	RW										
	1				1	1										
Range	Open-loop, Closed-loop vector, Servo						OFF (0) or On (1)									
Default	Open-loop, Closed-loop vector, Servo						OFF (0)									
Linked to																
Update rate	4 ms read															

The mechanical lock on an elevator car will operate independent of the drive during an over speed condition so the elevator car is safely stopped in a locked position. This elevator releasing feature will attempt to release the blocked elevator. The blocked elevator releasing function is enabled using a digital input to the drive routed to Pr **19.45** = On (1). Once enabled the elevator car locked condition is identified monitoring Pr **10.09** current limit active, and Pr **10.03** zero speed active.

The blocked elevator releasing function can be used to release the cabin when trapped after the TUV test.

When enabled the lift should be operated in inspection mode to release the cabin. The drive will start with a fast ramp and maximum allowed current. If the cabin is not released immediately the drive will shake the cabin (switch direction commands repeatedly) as long as the inspection mode is active.

During cabin release the drive will run the motor with creep speed (Pr **18.11**) independent from the selected speed.

If inspection mode is released the drive will stop the motor and the blocked elevator releasing function will be stopped Pr **19.45** = OFF, if the blocked elevator releasing function is to be implemented again Pr **19.45** should be reactivated = On.

To allow maximum torque to be generated, and provide the best performance for the blocked elevator releasing, the following parameter settings are used:

Parameter	Description
Pr **2.02**	Ramps disabled in elevator software
Pr **10.03**	Zero speed
Pr **10.09**	Drive output is at current limit
Pr **18.10**	Pr **18.10** = Creep speed **V1**
Pr **19.18**	Disable distance error detection, threshold set = 0
Pr **19.24**	Disable speed error detection, threshold set = 0
Pr **19.28**	Disable Start optimizer, time set = 0

19.46	**Fast start enable**															
Variants	Unidrive SP, Unidrive ES, Digitax ST															
Drive modes	Open-loop, Closed-loop vector, Servo															
Coding	Bit	Txt	VM	RO	US	RW										
	1				1	1										
Range	Open-loop, Closed-loop vector, Servo						OFF (0) or On (1)									
Default	Open-loop, Closed-loop vector, Servo						OFF (0)									
Linked to																
Update rate	4 ms read															

This is the FAST start enable. With this input active during the start the motor will be magnetized and the brake opened while the doors are closing to provide a much faster starting of the elevator. Pr **19.46** should be controlled and applied before the drive enable to generate the FAST start using an additional digital input on the drive from the elevator controller.

19.47	**Enable separate end acceleration jerk**															
Variants	Unidrive SP, Unidrive ES, Digitax ST															
Drive modes	Open-loop, Closed-loop vector, Servo															
Coding	Bit	Txt	VM	RO	US	RW										
	1				1	1										
Range	Open-loop, Closed-loop vector, Servo						OFF (0) or On (1)									
Default	Open-loop, Closed-loop vector, Servo						OFF (0)									
Linked to																
Update rate	4 ms read															

When Pr **19.47** = 1, this enables a separate jerk Pr **20.36** for the end of the initial acceleration, replacing the standard run jerk Pr **19.15**. For deceleration the standard run jerk Pr **19.15** is still active. If Pr **19.47** = 0 Pr **20.36** is disabled and the standard run jerk in Pr **19.15** is active.

19.48	**Enable full variable gains**															
Variants	Unidrive SP, Unidrive ES, Digitax ST															
Drive modes	Closed-loop vector, Servo															
Coding	Bit	Txt	VM	RO	US	RW										
	1				1	1										
Range	Closed-loop vector, Servo						OFF (0) or On (1)									
Default	Closed-loop vector, Servo						OFF (0)									
Linked to																
Update rate	4 ms read															

This parameter allows the control loop gains to be selected for either (a) separate gains for the start and for the travel/stop (b) separate gains for the start, the travel and the stop.

Parameter	Description
18.48 = OFF	Constant gains for the complete travel
18.48 = On **19.48** = OFF	Separate gains and current demand filters for the start and the travel
18.48 = On **19.48** = On	Separate gains and current demand filters for the start, travel and stop
19.11	Gain and filter transition time start to travel
20.30	Gain and filter transition time travel to stop

19.49	**Enable fast stop**															
Variants	Unidrive SP, Unidrive ES, Digitax ST															
Drive modes	Open-loop, Closed-loop vector, Servo															
Coding	Bit	Txt	VM	RO	US	RW										
	1				1	1										
Range	Open-loop, Closed-loop vector, Servo						OFF (0) or On (1)									
Default	Open-loop, Closed-loop vector, Servo						OFF (0)									
Linked to																
Update rate	4 ms read															

A Fast stop feature is available in the Elevator Solution Software which is enabled by setting Pr **19.49** = On. The Fast stop was developed mainly for commissioning / start up and inspection allowing faster stops to be carried out compared to the standard stop using the normal deceleration and stop profile.

This feature when used during commissioning / start up and installation will overcome hard, aggressive stops which can occur during the short moves. The Fast stop has a user defined deceleration rate in Pr **21.05** to allow the stop to be optimized for the application.

There are multiple ways in which the Fast stop can be activated as follows:

Mode 1 - Speed control

Fast stop mode enabled Pr **19.49** = On. During operation when a speed is selected (preferred speed **V3** Pr **18.13**) with a value of 0 mm/s the deceleration is carried out with the user defined deceleration rate programmed in Pr **21.05** for the Fast stop. For the Fast stop the jerk is modified using the Fast deceleration rate Pr **21.05**, therefore Jerk = Pr **21.05** / 0.2. The Fast stop function remains active for as long as the speed selection is active and Pr **19.49** = On.

The change of the acceleration is fixed at 200 ms to prevent jerk through fast deceleration, the stop jerk **Pr 19.16** is no longer active.

Introduced with elevator ***software version V01.10.00***

Mode 2 - Direction control (Single or Dual direction inputs (Pr **19.26** = 0 / 1))

The Fast stop function is activated if the Fast stop is enabled with Pr 1**9.49** = On and the direction signal is removed. The Fast stop deceleration rate is programmed in Pr **21.05** and the Jerk is defined by the Pr **21.05** / 0.2, following this the Fast stop will be active to standstill.

The change of the acceleration is therefore fixed at 200ms to prevent jerk through fast deceleration, the stop jerk **Pr 19.16** is no longer active.

Introduced with elevator ***software version V01.21.07***

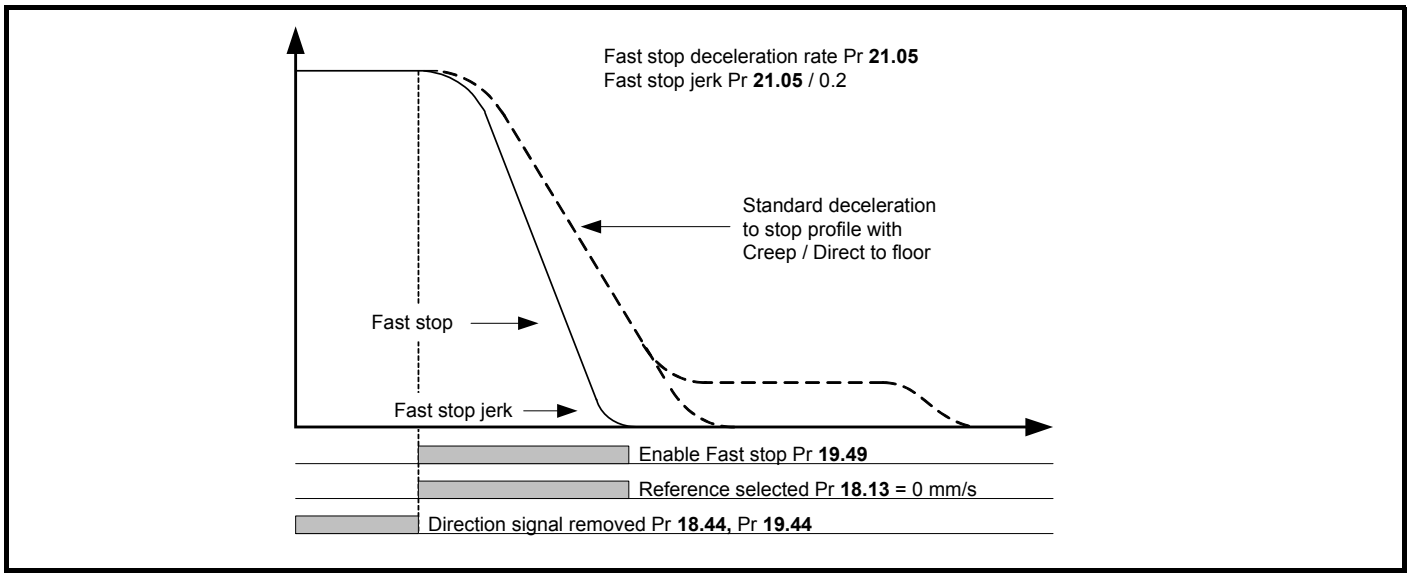

Mode 3 - Fast stop during acceleration

With fast stop modes (a) Speed selection or (b) Direction control, no stop is implemented during acceleration where a stop may be requested, the speed will continue to increase to the nominal speed before a stop / deceleration is carried out. Fast stop during acceleration is available with Elevator Solution Software ≥ V01.22.22. When the speed signals are removed during acceleration, the acceleration will be set to 0 and the speed will not increase with the deceleration starting immediately. The Fast stop during acceleration is enabled with Pr **71.59** = 1, (Pr **19.49** the enable for the standard fast stop is not required for this mode).

The stop / deceleration carried out with the ***Fast stop during acceleration*** can follow the standard profile or Mode 1 Speed control / Mode 2 Direction control Fast stop.

19.50	**Global warning**															
Variants	Unidrive SP, Unidrive ES, Digitax ST															
Drive modes	Open-loop, Closed-loop vector, Servo															
Coding	Bit	Txt	VM	RO	US	RW										
	1				1	1										
Range	Open-loop, Closed-loop vector, Servo						OFF (0) or On (1)									
Default	Open-loop, Closed-loop vector, Servo						OFF (0)									
Linked to																
Update rate	4 ms read															

The global warning indicates an error has been detected (OFF to On) during travel, but the Elevator software does not generate a trip only the above warning which can be passed to the Elevator controller.

This global warning applies to system faults, for example:

Motor thermistor = th
Overtemperature = Ohtx
Brake monitoring = t083
Motor contactor monitoring = t078

These faults are suppressed to prevent a drive trip and to allow the Elevator controller to position the lift car at the requested floor. This can also allow the controller to change the target floor to be the next closest floor to minimise the travel distance and the probability that the drive trips out.

7.8 Menu 20 parameters

Parameter	Description	Type	Range	Default			Units
				OL	VT	SV	
20.01	Software version	RO	xx.xx.xx	xx.xx.xx			
20.02	Software identity number	RO	± 10614	10614			
20.03	Not used	RW					
20.04	Maximum power last travel	RW	10000	0			
20.06	Maximum motor voltage last travel	RO	VAC	0			%
20.07	Field weakening level	RO	10000	100			0.1A
20.08	Time for load measurement	RW	±10000	200			ms
20.09	Maximum current during last travel	RO	A	0			% Mn
20.10	Roping	RW	4	1			
20.11	Program status	RO	10000	0			
20.12	Creep speed parameter number	RW	30000	0			
20.13	Direct to floor sensor source	RW	4		0		
20.14	Floor sensor correction source	RW	4		0		
20.15	UPS maximum power control set point	RW	30000	0			W
20.16	Not used	RW					
20.17	Not used	RW					
20.18	Not used	RW					
20.19	Load measurement value	RO	10000	0			%
20.20	Measured motor contactor delay time	RO	10000	0			ms
20.21	Measured creep distance	RO	10000	0			mm
20.22	V8 Additional speed 2	RW	10000	50			mm/s
20.23	V9 Additional speed 3	RW	10000	400			
20.24	V10 Additional speed 4	RW	10000	800			
20.25	Current loop Kp - gain 1 start	RW	30000	150			
20.26	Current loop Ki - gain 1 start	RW	30000	2000			
20.27	Speed loop Kp - gain 1 positioning	RW	65535		3000		
20.28	Speed loop Ki - gain 1 positioning	RW	65535		1500		
20.29	Variable gains transition speed threshold	RW	30000		100	500	mm/s
20.30	Variable gains deceleration time	RW	30000		0		ms
20.31	Not used	RW					
20.32	Not used	RW					
20.33	Not used	RW					
20.34	Not used	RW					
20.35	Not used	RO					
20.36	Jerk for end of acceleration	RW	10000		1000		mm/s^3
20.37	Not used	RW					
20.38	Lift Position	RO	2×10^9		0		mm
20.39	Diagnostic code	RO	1000	0			
20.40	Motor contactor release delay time	RW	90000	100			ms

20.01	**Software version**															
Variants	Unidrive SP, Unidrive ES, Digitax ST															
Drive modes	Open-loop, Closed-loop vector, Servo															
Coding	Bit	Txt	VM	RO	US	RW										
				1												
Range	Open-loop, Closed-loop vector, Servo						xx.xx.xx									
Default	Open-loop, Closed-loop vector, Servo						xx.xx.xx									
Linked to	F**53**															
Update rate	4 ms read															

This parameter indicates the version number of the Elevator Solution Software present in the SM Applications module. The version number is displayed in the form of xx.xx.xx for example V01.22.00.

For Elevator Solution Software < 01.22.00 the version number is displayed as xx.xx for example V01.15.

20.02	**Software identity number**															
Variants	Unidrive SP, Unidrive ES, Digitax ST															
Drive modes	Open-loop, Closed-loop vector, Servo															
Coding	Bit	Txt	VM	RO	US	RW										
				1												
Range	Open-loop, Closed-loop vector, Servo						± 1061x									
Default	Open-loop, Closed-loop vector, Servo						10614									
Linked to	F**54**															
Update rate	4 ms read															

This parameter indicates the variant of the Elevator Solution Software present in the SM-Applications module.

Identity	Software description	Pr 20.02
BV80-L/R1061-4	Comfort Lift	± 10614
BV80-M1061-6	DCP Lift (DCP3 / DCP4)	± 10616
BV80-M/R1061-7	CANopen Lift/ DCP Lift (DCP3 / DCP4)	± 10617

This parameter alternates -/+ when software is running in the applications module.

20.04	**Maximum power last travel**															
Variants	Unidrive SP, Unidrive ES, Digitax ST															
Drive modes	Open-loop, Closed-loop vector, Servo															
Coding	Bit	Txt	VM	RO	US	RW										
			1	1												
Range	Open-loop, Closed-loop vector, Servo						0 to Max power (kW)									
Default	Open-loop, Closed-loop vector, Servo															
Linked to	Pr **5.03**															
Update rate	4 ms read															

This parameter displays the maximum power and is measured during the start with a 1000 ms filter and Pr **5.03** “output power” in the drive. This can be used to determine the maximum power during the last travel. The maximum power is recalculated at the start of the next travel.

20.06	**Maximum motor voltage last travel**															
Variants	Unidrive SP, Unidrive ES, Digitax ST															
Drive modes	Open-loop, Closed-loop vector, Servo															
Coding	Bit	Txt	VM	RO	US	RW										
				1												
Range	Open-loop, Closed-loop vector, Servo						0 to motor rated voltage									
Default	Open-loop, Closed-loop vector, Servo						0									
Linked to																
Update rate	4 ms read															

This parameter displays the motor voltage during the last travel and can be used for example to determine if the motor is reaching field weakening. The value will ramp up to the maximum applied voltage during the travel and is reset to zero on the next start.

20.07	**Field weakening level**															
Variants	Unidrive SP, Unidrive ES, Digitax ST															
Drive modes	Open-loop, Closed-loop vector, Servo															
Coding	Bit	Txt	VM	RO	US	RW										
				1												
Range	Open-loop, Closed-loop vector Servo								0 to 100 (%) 0 to 100 (%)							
Default	N/A								0							
Linked to																
Update rate	4 ms read															

The field weakening level in Pr **20.07** indicates if the motor flux is weakened at full speed. This detection is derived from drive parameter Pr **4.17** and should be in the region of 95 to 100 %. The rated magnetization current is derived from the motor rated current Pr **5.07** and the power factor Pr **5.10**. If it is below 90 % there may be an incorrect motor map setting of the motor is operating in field weakening where the magnetization current is reducing.

In Servo mode parameter Pr **4.17** shows the reactive current for field weakening if high speed mode is enabled with Pr **5.22** = 1. For the field weakening level the maximum of Pr **4.17** is detected, which indicates the voltage compensation requested.

20.08	**Time for load measurement**															
Variants	Unidrive SP, Unidrive ES, Digitax ST															
Drive modes	Open-loop, Closed-loop vector, Servo															
Coding	Bit	Txt	VM	RO	US	RW										
					1	1										
Range	Open-loop, Closed-loop vector, Servo								10,000 (ms)							
Default	Open-loop, Closed-loop vector, Servo								200							
Linked to																
Update rate	4 ms read															

This parameter defines the time allocated for the load measurement to be used for emergency rescue operation and overload detection. The load measurement determines the load difference between the cabin and the counterweight. It can be used to determine the direction for emergency rescue or to generate an overload signal. The load measurement is activated by setting Pr **20.08** <> 0 and is executed after the brake release delay Pr **19.25**. To disable the load measurement set the time in Pr **20.08** = 0 (this will also reduce the starting time).

The measurement result is displayed in Pr **20.19** as % of nominal torque M_n. For accurate load measurement a time of 500 ms is recommended, the default setting of 200 ms is sufficient to determine the load and direction. The load measurement also produces an overload indication in Pr **19.36** by the comparison of the measured load value Pr **20.19** and the overload threshold set in Pr **20.18**.

Parameter	Description
Pr **20.08**	Positive values > 0 load measurement carried out during the start (gearless systems)
Pr **20.08**	Negative values < 0 load measurement carried out during the travel once contract speed is reached (geared systems)
Pr **19.36**	Overload output
Pr **19.37**	Direction of load
Pr **19.39**	Invert load direction
Pr **20.18**	Load measurement overload threshold
Pr **20.19**	Load measurement value

An efficiency parameter is available Pr **70.86,** which allows adjustment of the mechanical efficiency of the lift in %. The default setting for the system efficiency is 85 % (Pr **70.86** = 85). The load measurement accuracy can be improved by adjusting the efficiency in Pr **70.86** this should be carried out during operation with empty car up and down adjusting to achieve identical load values.

20.09	**Maximum current during last travel**															
Variants	Unidrive SP, Unidrive ES, Digitax ST															
Drive modes	Open-loop, Closed-loop vector, Servo															
Coding	Bit	Txt	VM	RO	US	RW										
			1	1												
Range	Open-loop, Closed-loop vector, Servo						0 to Current limit (%)									
Default	Open-loop, Closed-loop vector, Servo						0									
Linked to																
Update rate	4 ms read															

The current level displayed in Pr **20.09** indicates the maximum current during the complete travel, the value is reset to 0 at start and recalculated for each travel. This value is calculated as a percentage from the motor rated current in Pr **5.07** and the power factor in Pr **5.10**.

20.10	**Roping**															
Variants	Unidrive SP, Unidrive ES, Digitax ST															
Drive modes	Open-loop, Closed-loop vector, Servo															
Coding	Bit	Txt	VM	RO	US	RW										
					1	1										
Range	Open-loop, Closed-loop vector, Servo						0 to 4									
Default	Open-loop, Closed-loop vector, Servo						1									
Linked to	F**16**															
Update rate	4 ms read															

This is the roping for the elevator system and is used by the Rated rpm autotune Pr **19.31**, for the calculation of the Nominal elevator rpm Pr **18.03**.

20.11	**Program status**															
Variants	Unidrive SP, Unidrive ES, Digitax ST															
Drive modes	Open-loop, Closed-loop vector, Servo															
Coding	Bit	Txt	VM	RO	US	RW										
				1												
Range	Open-loop, Closed-loop vector, Servo						0 to 10,000									
Default	Open-loop, Closed-loop vector, Servo						0									
Linked to																
Update rate	4 ms read															

This parameter indicates the status of the Elevator Solution Software and can be used to identify the control state.

Status	Control state description
Pr **20.11** = 0	Idle, no call pending, waiting for start signal from speed selection Pr **18.10** > 1810 and if Pr **19.26** = 1 additional 1 direction signal, will activate the motor contactor, if start signal applied and waiting for the motor contactor closed, T31 = On
Pr **20.11** = 1	De-bounce motor contactors for 100 ms and enable current to flow when transition to Pr **20.11** = 2
Pr **20.11** = 2	Waiting for motor magnetised, if magnetised allow brake to be released and transit to Pr **20.11**= 3 (Servo mode = delay time 100 ms after drive enabled)
Pr **20.11** = 3	Waiting for brake release time (Pr **18.24**) and load measured (Pr **20.08**) after brake release signal active. If both completed allow ramp to start and transit to state Pr **20.11** = 4
Pr **20.11** = 4	Run mode, waiting for stop condition (start = 0 and speed = 0 and ramp = 0), then brake applied and transit to Pr **20.11** = 5.
Pr **20.11** = 5	Waiting for brake applied (brake apply time Pr **19.25**)
Pr **20.11** = 6	Waiting for motor current decay (Servo motor demagnetization time Pr **18.23**, Induction motor time delay = fixed 200 ms)
Pr **20.11** = 7	Waiting for contactor feedback released T31 = OFF and start condition removed, then transition to Pr **20.11** = 0.

20.12	**Creep speed parameter number**															
Variants	Unidrive SP, Unidrive ES, Digitax ST															
Drive modes	Open-loop, Closed-loop vector, Servo															
Coding	Bit	Txt	VM	RO	US	RW										
					1	1										
Range	Open-loop, Closed-loop vector, Servo						0000 to xxxx									
Default	Open-loop, Closed-loop vector, Servo						0									
Linked to																
Update rate	4 ms read															

This parameter can be used to define a new Creep speed parameter, Pr **xx.xx** from the default Pr **18.11**. For example if Pr **18.13** is required for the new Creep speed this can be entered as follows Pr **20.12** = 1813.

20.13	**Direct-to-floor sensor source**															
Variants	Unidrive SP, Unidrive ES, Digitax ST															
Drive modes	Closed-loop vector, Servo															
Coding	Bit	Txt	VM	RO	US	RW										
					1	1										
Range	Closed-loop vector, Servo						0 to 4									
Default	Closed-loop vector, Servo						0									
Linked to																
Update rate	4 ms read															

For some applications, especially high-speed elevators and long travel distance elevators direct-to-floor positioning control is often used with this overcoming inherent system delays normally associated with creep-to-floor Elevators.

With direct-to-floor positioning the speed is applied according to the selected floor distance. As a function of the distance to the desired final position, the elevator controller will disable the speed signal, and direct deceleration to the target position will take place. Direct-to-floor positioning along should only be used on elevators up to 1 m/s due to the control accuracy, above 1 m/s floor sensor correction should be enabled also. The following settings can be selected:

Parameter	Description
Pr **20.13** = 0	Direct-to-floor disabled **creep-to-floor active**
Pr **20.13** = 1	Direct-to-floor positioning with stop signal via ANIP 1 (T5)
Pr **20.13** = 2	Direct-to-floor positioning with stop signal via ANIP 2 (T7)
Pr **20.13** = 3	Direct-to-floor positioning with stop signal via ANIP 3 (T8)
Pr **20.13** = 4	Direct-to-floor positioning with disable the speed signals
Pr **20.13** = 5	Direct-to-floor positioning with user distance control Direct-to-floor positioning with flat top control

For details on floor sensor correction with Elevator systems above 1 m/s refer to Pr **20.14**

20.14	**Floor sensor correction source**															
Variants	Unidrive SP, Unidrive ES, Digitax ST															
Drive modes	Closed-loop vector, Servo															
Coding	Bit	Txt	VM	RO	US	RW										
					1	1										
Range	Closed-loop vector, Servo						0 to 4									
Default	Closed-loop vector, Servo						0									
Linked to																
Update rate	4 ms read															

Independent of the selected profile additional floor sensor correction can be utilized. Improved accurate distance correction is possible if a floor sensor can be detected in the range of 50 to 500 mm before the flush or level with floor target position. Floor sensor correction should be used with direct-to-floor positioning control on elevators with speeds in excess of 1 m/s. This ensures maximum accuracy.

The floor sensor correction is activated with the settings of Pr **20.14** which defines the control input on the drive for the external floor sensor correction signal.

Parameter	Description
Pr **20.14** = 0	Floor sensor correction **disabled**
Pr **20.14** = 1	Floor sensor correction = ANIP 1 (T5)
Pr **20.14** = 2	Floor sensor correction = ANIP 2 (T7)
Pr **20.14** = 3	Floor sensor correction = ANIP 3 (T8)
Pr **20.14** = 4	Distance controlled stopping distance

Floor sensor correction is also set up using the following parameters

Parameter	Description
Pr **18.09**	Remaining floor sensor correction distance
Pr **18.19**	Floor sensor correction target distance
Pr **19.09**	Speed at floor sensor correction active
Pr **19.42**	Enable floor sensor correction
Pr **20.05**	Time from floor sensor correction active to stop

20.15	**UPS maximum power control set-point**															
Variants	Unidrive SP, Unidrive ES, Digitax ST															
Drive modes	Open-loop, Closed-loop vector, Servo															
Coding	Bit	Txt	VM	RO	US	RW										
					1	1										
Range	Open-loop, Closed-loop vector, Servo						0 to Max power (kW)									
Default	Open-loop, Closed-loop vector, Servo						0									
Linked to																
Update rate	4 ms read															

This parameter is used to limit the maximum power for the UPS used for emergency backup operation. This should be set-up based upon the UPS power rating.

Parameter	Description
Pr **19.38**	Emergency rescue enable
Pr **21.28**	Evacuation current limit full load
Pr **21.29**	Evacuation current limit no load

20.16	**Menu zero selector**															
Variants	Unidrive SP, Unidrive ES, Digitax ST															
Drive modes	Open-loop, Closed-loop vector, Servo															
Coding	Bit	Txt	VM	RO	US	RW										
						1										
Range	Open-loop, Closed-loop vector, Servo						0 to 4									
Default	Open-loop, Closed-loop vector, Servo						0									
Linked to	Pr **0.12**[0]															
Update rate	4 ms read															

Pr **0.00**[0] to Pr **0.12**[0] and Pr **0.38**[0] to Pr **0.50**[0] are fixed with a single function. Pr **0.13**[0] to Pr **0.37**[0] have a pre-programmed selectable parameter set _ group, these can be selected by the user as follows.

Menu 0, Pr **0.12**[0], is changed to select different parameter set _ group from 1 to 4. By setting Pr **0.12**[0] to the predefined code 1, 2, 3 or 4, other configurations of Pr **0.13**[0] to Pr **0.37**[0] are selected. Pr **0.12**[0] cannot be saved and after power up the standard configuration for Pr **0.13**[0] to Pr **0.37**[0] are loaded automatically. Where applicable the parameter set _ group selected with Pr **0.12**[0] is shown in square brackets after the menu zero parameter to indicate which configuration is selected.

Parameter settings

Pr **0.26**[1] of the elevator parameters = Pr **0.12** = 1, Pr **0.26**[1]

To select Pr **0.18**[2] = Set Pr **0.12** = 2 and select Pr **0.18**

Parameter	Description
Pr **0.12**[0] =0	Basic parameters from Pr **0.13**[0] to Pr **0.37**[0]
Pr **0.12**[0] =1	Installation parameters from Pr **0.13**[1] to Pr **0.37**[1]
Pr **0.12**[0] =2	Control parameters from Pr **0.13**[2] to Pr **0.37**[2]
Pr **0.12**[0] =3	Distance parameters from Pr **0.13**[3] to Pr **0.37**[3]
Pr **0.12**[0] =4	Diagnostics parameters from Pr **0.13**[4] to Pr **0.37**[4]

20.19	**Load measurement value**															
Variants	Unidrive SP, Unidrive ES, Digitax ST															
Drive modes	Open-loop, Closed-loop vector, Servo															
Coding	Bit	Txt	VM	RO	US	RW										
				1												
Range	Open-loop, Closed-loop vector, Servo						0 to Current limit (%)									
Default	Open-loop, Closed-loop vector, Servo						0									
Linked to																
Update rate	4 ms read															

This parameter displays the percentage load present following brake release and the time specified in Pr **20.08** for the load measurement. To disable the load measurement set the time for load measurement Pr **20.08** = 0.

The measurement duration is set at 200 ms at default with this being sufficient for determining the load and direction. Extending the measurement duration in Pr **20.08** will result in higher accuracy however this does also result in an increased starting delay.

It may be beneficial to set Pr **20.08** = 0 if the load measurement is not required with this reducing the starting time.

Pr **20.08** = Positive values load measurement carried out during the start.

Pr **20.08** = Negative values load measurement carried out during the travel once contract speed is reached.

Parameter	Description
Pr **19.37**	Direction of load
Pr **19.39**	Invert load direction
Pr **20.08**	Load measurement time

20.20	**Measured motor contactor delay time**															
Variants	Unidrive SP, Unidrive ES, Digitax ST															
Drive modes	Open-loop, Closed-loop vector, Servo															
Coding	Bit	Txt	VM	RO	US	RW										
				1												
Range	Open-loop, Closed-loop vector, Servo						0 to 90,000 (ms)									
Default	Open-loop, Closed-loop vector, Servo						0									
Linked to																
Update rate	4 ms read															

This parameter displays the measured time for the motor contactor to operate. This is the time taken for the motor contactor to operate and the drive enable to switch ON to OFF via the auxiliary contacts on the output motor contactors (Fast relays for zero motor contactor solution).

If this time is negative, the motor contactor is being opened with current flowing to the motor, which should be prevented as this leads to damage of the output motor contactors and can also result in drive OI.AC trips. If the delay time is negative the brake apply delay Pr **18.24** should be adjusted to at least the value of Pr **20.20**.

Parameter	Description
Pr **18.24**	Brake apply delay
Pr **20.40**	Motor contactor release delay time

20.21	**Measured creep distance**															
Variants	Unidrive SP, Unidrive ES, Digitax ST															
Drive modes	Open-loop, Closed-loop vector, Servo															
Coding	Bit	Txt	VM	RO	US	RW										
				1												
Range	Open-loop, Closed-loop vector, Servo						0 to 10,000 (mm)									
Default	Open-loop, Closed-loop vector, Servo						0									
Linked to																
Update rate	4 ms read															

The measured Creep distance calculation begins only when the profile generator goes from the contract speed, through deceleration, and reaches the programmed Creep speed in Pr **18.11 V1**. The distance is calculated during operation at Creep speed and is stopped with the transition from Creep speed to Stop.

20.22	**V8 additional speed 2**															
20.23	**V9 additional speed 3**															
20.24	**V10 additional speed 4**															
Variants	Unidrive SP, Unidrive ES, Digitax ST															
Drive modes	Open-loop, Closed-loop vector, Servo															
Coding	Bit	Txt	VM	RO	US	RW										
					1	1										
Range	Open-loop, Closed-loop vector, Servo						0 to 10,000 (mm/s)									
Default	Open-loop, Closed-loop vector, Servo						V8 = 50, V9 = 400, V10 = 800									
Linked to																
Update rate	4 ms read															

These parameters are the additional speeds 2, 3 and 4. Pr **18.10** = 18.10 indicates that no speed reference has been selected by the Lift controller over the drives control terminals. The programmable speed references can be viewed in the following parameters as shown below. Also refer to section 5.3 *Speed selection* on page 77 for further details on operation and selection of speeds.

Pr 18.10	Description	Drive parameter
1810	No speed selected	
2022	**V8** Additional speed 2	Pr **20.22**
2023	**V9** Additional speed 3	Pr **20.23**
2024	**V10** Additional speed 4	Pr **20.24**

From Elevator software version V01.12.00 onwards the deceleration distances required for the programmed speeds are displayed in parameters Pr **2.23** to Pr **2.25** as shown here.

Speed mm/s	**V8**	**V9**	**V10**
	Pr **20.22**	Pr **20.25**	Pr **20.24**
Deceleration distance cm	Pr **2.23**	Pr **2.24**	Pr **2.25**

In cases where the drives I/O is fully used and additional functions including speed selections are required an additional SM-I/O module can be installed to increase the available I/O capacity.

20.25	**Current loop proportional gain 1 start**															
Variants	Unidrive SP, Unidrive ES, Digitax ST															
Drive modes	Open-loop, Closed-loop vector, Servo															
Coding	Bit	Txt	VM	RO	US	RW										
					1	1										
Range	Open-loop, Closed-loop vector, Servo						0 to 30000									
Default	Drive voltage rating: Open-loop, Closed-loop vector, Servo						200 V 75	400 V 150	575 V 180	690 V 215						
Linked to																
Update rate	Background read															

20.26	**Current loop integral gain 1 start**															
Variants	Unidrive SP, Unidrive ES, Digitax ST															
Drive modes	Open-loop, Closed-loop vector, Servo															
Coding	Bit	Txt	VM	RO	US	RW										
					1	1										
Range	Open-loop, Closed-loop vector, Servo						0 to 30000									
Default	Drive voltage rating Open-loop, Closed-loop vector, Servo						200 V 1000	400 V 2000	575 V 2400	690 V 3000						
Linked to																
Update rate	Background read															

The current loop gains for Unidrive SP and the Elevator Solution Software solution can be configured for different setting, fixed and variable as follows. Pr **20.25** and Pr **20.26** are used to define the current loop gains for the start when variable gains are selected.

Parameter	Description
Pr 18.48 = On	Fixed current loop gains for complete travel Pr **4.13** Kp, Pr **4.14** Ki
	Dual current loop filter Pr **4.23** start, Pr **4.12** travel, stop
Pr 18.48 = On **Pr 19.48 = On**	Variable current loop gains Start = Pr **20.25** Kp, Pr **20.26** Ki Travel = Pr **4.13** Kp, Pr **4.14** Ki Stop = Pr **21.22** Kp, Pr **21.23** Ki
	Variable current loop filters Start = Pr **4.23** Travel = Pr **4.12** Stop = Pr **21.16**

20.27	**Speed loop Kp - gain 1 positioning**															
Variants	Unidrive SP, Unidrive ES, Digitax ST															
Drive modes	Closed-loop vector, Servo															
Coding	Bit	Txt	VM	RO	US	RW										
					1	1										
Range	Closed-loop vector, Servo						0.00 to 20,000 (0.0001 x 1/rad s^{-1})									
Default	Closed-loop vector, Servo						3000									
Linked to																
Update rate	Background read															

20.28	**Speed loop Ki - gain 1 positioning**															
Variants	Unidrive SP, Unidrive ES, Digitax ST															
Drive modes	Closed-loop vector, Servo															
Coding	Bit	Txt	VM	RO	US	RW										
					1	1										
Range	Closed-loop vector, Servo						0.00 to 20,000 (0.01 x s/rad s^{-1})									
Default	Closed-loop vector, Servo						1500									
Linked to																
Update rate	Background read															

For optimization of the speed loop on the drive the following proportional and integral gains are available. During adjustment of the gains the following parameters can be used to monitor the resulting performance, comparing the speed reference to the speed feedback.

Parameter	Description
Pr **3.01**	Final speed reference
Pr **3.02**	Unidrive SP speed feedback
Pr **3.03**	Speed loop following error
Pr **4.02**	Torque producing current

Adjustment of the speed loop gains is carried out in order to:

- Achieve the best possible ride quality
- Prevent roll back issues during start and stop
- Prevent speed and distance errors
- Overcome acoustic noise and vibration

Kp proportional gain

If Kp proportional gain has a value and Ki integral gain is set to zero the controller will only have a proportional term, and there must be a speed error to produce a torque reference. As the motor load increases there will be a difference between the speed reference and actual speed (speed feedback). This effect, called regulation depends on the level of the proportional gain, the higher the gain, the smaller the speed following error for a given load.

If the Kp proportional gain is too low for a given load condition:

- The speed following error will increase
- Speed droop and overshoot can be present during transitions in speed reference
- Oscillations can be present during constant speed operation.

If the Kp proportional gain is increased for a given load, the speed following error, along with the speed droop and overshoot will be reduced.

If the Kp proportional gain is set too high either:

- The acoustic noise generated from the motor due to the Kp proportional gain amplifying the speed feedback quantization, will become unacceptably high.
- The closed loop stability limit will be reached where quantization due to the encoder feedback resolution will appear on the speed feedback as oscillations.

Figure 7-8 Speed loop Kp proportional gain

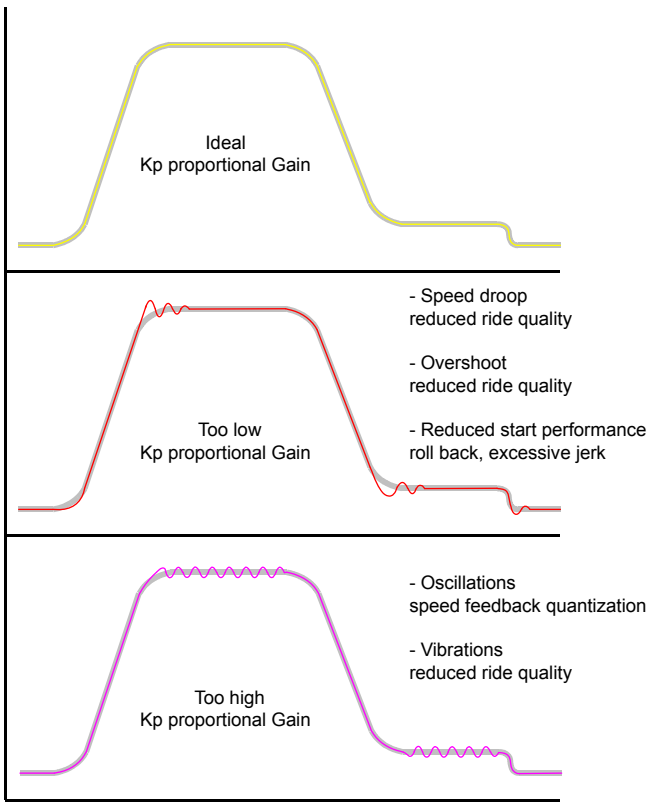

Ki integral gain

The Ki integral gain responds proportionally to the accumulated speed error over a period of time. The Ki integral gain prevents regulation and increases the output dynamic performance.

Increasing the integral gain reduces the time taken for the speed to reach the correct level and increases the stiffness of the system, i.e. it reduces the shaft displacement produced when applying a load torque to the motor.

Increasing the integral gain also reduces the system damping giving overshoot after a transient. For a given Ki integral gain the damping can be improved by further increasing the Kp proportional gain.

A compromise must be reached where the system response, stiffness and damping are all adequate for the application.

Figure 7-9 Speed loop Ki Integral gain

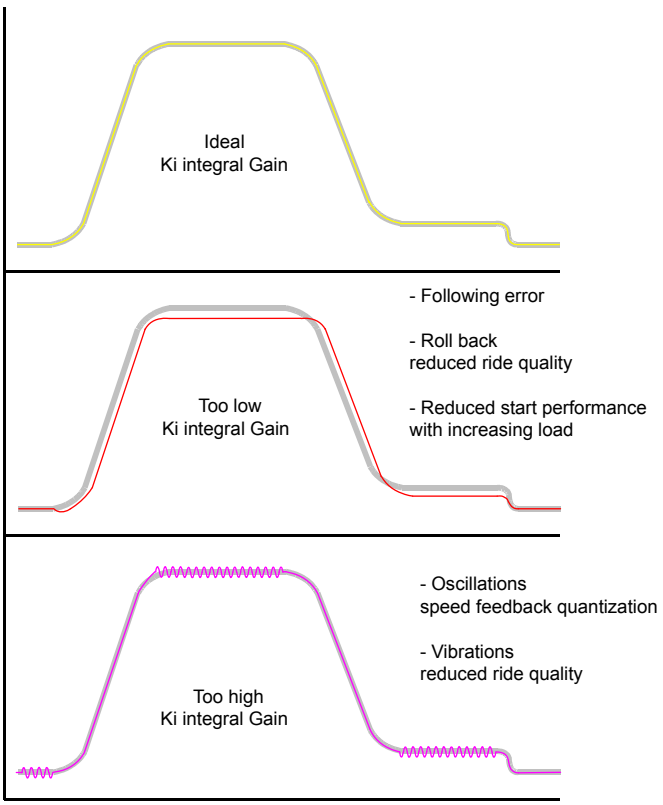

Kd differential gain

For all elevator applications the Kd differential gain for the speed loop settings is not used in either Pr **3.12** or Pr **3.15** of the drive and therefore these should remain at their default value of 0.

NOTE

In addition to the speed loop gains there is also a speed feedback filter Pr **3.42** which can be adjusted to improve the speed feedback quality for closed loop operation when using a low resolution speed feedback devices or where there is induced noise present on the speed feedback.

NOTE

In order to tune the speed loop gains for the best possible operation the lift should be run at both minimum and maximum speeds with both an empty and a full car whenever possible.

NOTE

The resolution of the encoder feedback device will affect the maximum achievable speed loop gains. Higher resolution encoders such as SinCos encoders (for example SC.EnDAt, SC.Hiperface) provide much higher resolution and are the preferred feedback devices for high ride quality.

20.29	**Variable gains transition speed threshold**															
Variants	Unidrive SP, Unidrive ES, Digitax ST															
Drive modes	Closed-loop vector, Servo															
Coding	Bit	Txt	VM	RO	US	RW										
					1	1										
Range	Closed-loop vector, Servo						0 to 30,000 (mm/s)									
Default	Closed-loop vector, Servo						500									
Linked to																
Update rate	Background read															

This parameter is used to define the speed threshold at which point the control loop gains during acceleration and deceleration are changed. Variable control loop gains being selected with Pr **18.48** = On and Pr **19.48** = On. For the transition of the variable gains to operate with the speed threshold Pr **20.29** both the variable gains timed thresholds in Pr **19.11** and Pr **20.30** must be set = 0.

20.30	**Variable gains deceleration time**															
Variants	Unidrive SP, Unidrive ES, Digitax ST															
Drive modes	Closed-loop vector, Servo															
Coding	Bit	Txt	VM	RO	US	RW										
					1	1										
Range	Closed-loop vector, Servo						0 to 30,000 (ms)									
Default	Closed-loop vector, Servo						0									
Linked to																
Update rate	Background read															

This parameter is used to define the deceleration time for the variable gains (Pr **18.48** = On and Pr **19.48** = On) from the point at which the stop signal is received and deceleration begins. If both Pr **19.11** and Pr **20.30** are set = 0, then Pr **20.29** the variable gains speed transition threshold is active.

20.36	**Jerk for end of acceleration**															
Variants	Unidrive SP, Unidrive ES, Digitax ST															
Drive modes	Closed-loop vector, Servo															
Coding	Bit	Txt	VM	RO	US	RW										
					1	1										
Range	Closed-loop vector, Servo						0 to 10,000 (mm/s^3)									
Default	Closed-loop vector, Servo						1000									
Linked to																
Update rate	Background read															

This is a separate jerk that can be enabled for the end of the acceleration to travel which can be used to further improve the ride quality. This end of acceleration jerk replaces the standard run jerk in Pr **19.15** for this section of the profile and is enabled by setting Pr **19.47** Enable separate end acceleration jerk = On.

20.38	**Lift position**															
Variants	Unidrive SP, Unidrive ES, Digitax ST															
Drive modes	Closed-loop vector, Servo															
Coding	Bit	Txt	VM	RO	US	RW										
				1	1											
Range	Closed-loop vector, Servo						0 to 10,000,000 mm									
Default	Closed-loop vector, Servo						0									
Linked to																
Update rate	Background read															

In version **V1.22.00** an additional display of the lift car position is available with Pr **20.38**. There are two modes of operation possible for the lift car position which are selected with Pr **70.63** as follows:

Pr **70.63** = 0: Pr **20.38** displays the **position relative** to the last stop in mm. The position is displayed during the travel and reset = 0 on the next start.

Pr **70.63** <> 0: Pr **20.38** displays the **absolute position** of the lift car in the shaft. The reference to the absolute position can be done by setting Pr **20.38** at stop to the absolute position. The position change will be calculated from the motor encoder when the drive is powered.

The absolute position can be used as an SSI output using the option module SM-Universal Encoder Plus. For more information refer to the *SM Universal Encoder Plus User Guide*. Because of rope slip, the position reference can be lost after some time. The position is displayed continuously in Pr **20.38**.
The default setting for Pr **70.63** = 0.

20.39	**Diagnostic travel interrupt**															
Variants	Unidrive SP, Unidrive ES, Digitax ST															
Drive modes	Open loop, Closed-loop vector, Servo															
Coding	Bit	Txt	VM	RO	US	RW										
				1	1											
Range	Open loop, Closed-loop vector, Servo						0 to 30,000									
Default	Open loop, Closed-loop vector, Servo															
Linked to																
Update rate	Background read															

The diagnostic code was located in this parameter for software versions < V01.18.00, for software version ≥ V01.18.00 refer to Pr **20.39**.

Parameter	Description
Pr **20.39** = 0	No travel interrupt
Pr **20.39** = 1	Travel interrupt during motor magnetization
Pr **20.39** = 2	Travel interrupt during brake opening
Pr **20.39** = 3	Travel interrupt during normal travel
Pr **20.39** = 4	Travel interrupt during brake apply
Pr **20.39** = 5	Travel interrupt during motor demagnetization

20.40	**Motor contactor release delay time**															
Variants	Unidrive SP, Unidrive ES, Digitax ST															
Drive modes	Open loop, Closed-loop vector, Servo															
Coding	Bit	Txt	VM	RO	US	RW										
					1	1										
Range	Open loop, Closed-loop vector, Servo						0 to 90,000 (ms)									
Default	Open loop, Closed-loop vector, Servo						100									
Linked to																
Update rate	Background read															

This parameter is used to introduce a time delay for the motor contactor release time and can be used for high inductance servo motors and gearless systems to allow motor current decay before switching the motor contactors during stop.

In addition Pr **20.20** displays the actual measured time for the motor contactor to operate, this is the time for the drive enable to operate On to OFF via the auxiliary contact on the output motor contactors.

Parameter	Description
Pr **18.24**	Brake apply delay
Pr **20.20**	Measured motor contactor delay time

7.9 Menu 21 parameters

Parameter	Description	Type	Range	Default			Units
				OL	VT	SV	
21.01	Not used	RW					
21.02	Not used	RW					
21.03	Not used	RW					
21.04	Not used	RW					
21.05	Fast stop rate	RW	10000	200	2		cm/mm/s^2
21.06	Not used	RW					
21.07	Rated current	RW	A	A-rated			A
21.08	Not used	RW					
21.09	Not used	RW					
21.10	Not used	RW					
21.11	Not used	RW					
21.12	Stator resistance control	RO	6500	0			Ω
21.13	Not used	RW					
21.14	Not used	RW					
21.15	Not used	RW					
21.16	Current filter 3 positioning	RW	25	2			ms
21.17	Not used	RW					
21.18	Not used	RW					
21.19	Not used	RW					
21.20	Not used	RW					
21.21	Not used	RW					
21.22	Current loop Kp – gain 3 positioning	RW	30000	150			
21.23	Current loop Ki – gain 3 positioning	RW	30000	2000			
21.24	Not used	RW					
21.25	Not used	RW					
21.26	Not used	RW					
21.27	Not used	RW					
21.28	Evacuation current limit full load	RW	30000	110			%
21.29	Evacuation current limit no load	RW	30000	80			%

21.05	**Fast stop rate**															
Variants	Unidrive SP, Unidrive ES, Digitax ST															
Drive modes	Open loop, Closed-loop vector, Servo															
Coding	Bit	Txt	VM	RO	US	RW										
					1	1										
Range	Open loop Closed-loop vector, Servo							0 to 10,000 (cm/s^2) 0 to 10,000 (m/s^2)								
Default	Open loop Closed-loop vector, Servo							200.0 2.000								
Linked to																
Update rate	Background read															

When the Fast stop function is enabled using Pr **19.49** this Fast stop rate is used. For the Fast stop function the jerk is also modified (default 200 ms) this being calculated from the Fast stop deceleration rate Pr **21.05**, Fast stop jerk = Pr **21.05** / 0.2.

21.07	**Rated current**															
Variants	Unidrive SP, Unidrive ES, Digitax ST															
Drive modes	Open loop, Closed-loop vector, Servo															
Coding	Bit	Txt	VM	RO	US	RW										
			1		1	1										
Range	Open loop, Closed-loop vector, Servo							0 to Rated current max A								
Default	Open loop, Closed-loop vector, Servo							Pr **5.07**								
Linked to																
Update rate	Background read															

New function = Normal duty identification / drive sizing
Trip t061 generated at standstill if Pr **5.07** > Pr **11.32** and Pr **5.07** > Pr **21.07** prevents ND
Disabled by setting Pr **21.07** > Pr **11.32**, then Pr **5.07** < Pr **21.07**

21.12	**Stator resistance control**															
Variants	Unidrive SP, Unidrive ES, Digitax ST															
Drive modes	Open-loop															
Coding	Bit	Txt	VM	RO	US	RW										
					1	1										
Range	Open-loop							0.000 to 65.000 (Ω)								
Default	Open-loop							0								
Linked to																
Update rate	Background read															

Pr **21.12** shows the stator resistance of the motor for the variable stator resistance control. The units vary with the drive size to allow the full range of motor stator resistances to be represented with suitable resolution in all drive frame sizes. The value displayed here is the stator resistance used for the motor during the travel when enabled through Pr **18.48**.

Parameter	Description
Pr **5.17**	Start stator resistance (optimum value for start)
Pr **18.48**	Enable variable stator resistance
Pr **19.11**	Stator resistance transition time

21.16	**Current loop filter 3 positioning**															
Variants	Unidrive SP, Unidrive ES, Digitax ST															
Drive modes	Closed-loop vector, Servo															
Coding	Bit	Txt	VM	RO	US	RW										
					1	1										
Range	Closed-loop vector, Servo						0 to 25 (ms)									
Default	Closed-loop vector, Servo						2									
Linked to																
Update rate	Background read															

This parameter is a current loop filter which can be introduced for the positioning / stop of the elevator. This current loop filter is enabled through setting Pr **18.48** and Pr **19.48** = On (1) select full variable gains for Start, Travel and Positioning / Stop. This filter can be used to overcome acoustic noise due to high speed loop gains, or instability in the motor due to unstable motor currents.

21.22	**Current loop Kp – gain 3 positioning**															
Variants	Unidrive SP, Unidrive ES, Digitax ST															
Drive modes	Open-loop, Closed-loop vector, Servo															
Coding	Bit	Txt	VM	RO	US	RW										
					1	1										
Range	Open-loop, Closed-loop vector, Servo						0 to 30,000									
Default	Drive voltage rating: Open loop, Closed-loop vector, Servo						200 V 75	400 V 150	575 V 180	690 V 215						
Linked to																
Update rate	Background read															

21.23	**Current loop Ki – gain 3 positioning**															
Variants	Unidrive SP, Unidrive ES, Digitax ST															
Drive modes	Open-loop, Closed-loop vector, Servo															
Coding	Bit	Txt	VM	RO	US	RW										
					1	1										
Range	Open-loop, Closed-loop vector, Servo						0 to 30,000									
Default	Drive voltage rating Open loop, Closed-loop vector, Servo						200 V 2000	400 V 2000	575 V 2400	690 V 3000						
Linked to																
Update rate	Background read															

The auto tune values for the current loop gains are normally sufficient for operation, however if acoustic noise is present from the motor following the auto tune these current loop gains should be decreased in steps of 10 % from the auto tuned values. Both the above current loop gains are enabled through setting Pr **18.48** and Pr **19.48** = On (1) select full variable gains for Start, Travel and Positioning / Stop.

The initial current loop gain settings can be derived from a stationary auto tune test.

21.28	**Evacuation current limit full load**															
Variants	Unidrive SP, Unidrive ES, Digitax ST															
Drive modes	Open loop, Closed-loop vector, Servo															
Coding	Bit	Txt	VM	RO	US	RW										
					1	1										
Range	Open loop, Closed-loop vector, Servo						0 to Current limit (%)									
Default	Open loop, Closed-loop vector, Servo						110									
Linked to																
Update rate	Background read															

21.29	**Evacuation current limit no load**															
Variants	Unidrive SP, Unidrive ES, Digitax ST															
Drive modes	Open loop, Closed-loop vector, Servo															
Coding	Bit	Txt	VM	RO	US	RW										
					1	1										
Range	Open loop, Closed-loop vector, Servo						0 to Current limit (%)									
Default	Open loop, Closed-loop vector, Servo						80									
Linked to																
Update rate	Background read															

These parameters define the maximum full load and no load current levels allowable during evacuation control to prevent the UPS power supply from being overloaded. During emergency evacuation operation the following functions are also disabled to extend the operating time of the UPS power supply:

Parameter	Description
Pr **4.07**	Current limit controlled
Pr **19.12**	Disable start locking, Kd gain = 0
Pr **19.20**	Disable start locking, Kp gain = 0
Pr **19.18**	Disable distance error detection, threshold set = 0
Pr **19.24**	Disable speed error detection, threshold set = 0
Pr **19.28**	Disable Start optimizer, time set = 0
Pr **19.38**	Emergency rescue enable
Pr **20.15**	UPS maximum power control set-point
Pr **20.08**	Load measurement disabled, time set = 0

7.10 Menu 70 parameters

Parameter	Description	Type	Range	Default			Units
				OL	VT	SV	
70.00 to 70.57	Parameter memory field, DCP	RO	30000				
70.58	Parameter memory field, DCP	RO	30000				
70.59	Fast start monitoring (Trip t062)	RW	10000		100		mm
70.60	Not used	RO					
70.61	Not used	RO					
70.62	Not used	RO					
70.63	Position display mode	RW	0/1		0		
70.64	Not used	RW					
70.65	Lift software error detection control	RW	1111111		0		
70.66	Option module last trip code (SLX.Er)	RO	30000				
70.67	Lift software last line trip	RO					
70.68	kHz switch up delay	RW			250		ms
70.69	kHz switch down delay	RW			50		
70.70	Maximum IGBT junction temperature for last travel	RO	135		0		°C
70.71	Travel counter	RO	30000				
70.72	Accumulator IGBT junction temperature x travel counter	RO					°C
70.73	Average IGBT junction temperature delta	RO	135				°C
70.74	Elevator kHz control	RW	2		1		
70.75	Threshold for switching frequency increase	RW	100		25		°C
70.76	Threshold for switching frequency decrease	RW			40		°C
70.77	Not used	RO					
70.78	Actual IGBT temperature change	RO	135		0		°C
70.79	Not used	RO					
70.80	Load measurement value	RO	400				%
70.81	Freeze protection threshold (Trip t073)	RO	-15		0		°C
70.82	Variable stator resistance memory, open loop control	RO	65.000				mΩ
70.83	Current limit memory	RO	A max				%
70.84	Evacuation rescue supply active	RO	0 / 1		0		
70.85	Not used	RO					
70.86	Shaft efficiency	RW	100		0		%
70.87	Speed selection filter	RW	200		0		ms
70.88	Not used	RO					
70.89	Not used	RO					
70.90	Memory for current demand filter	RO	30000		2		
70.91	Memory for current loop Kp gain	RO	30000	20	150		
70.92	Memory for current loop Ki gain	RO	30000	40	2000		
70.93	Memory for change of operation mode	RO	30000		0		
70.94	Memory for encoder slot	RO	30000		0		
70.95	Memory for encoder type	RO	30000		0		
70.96	Memory for encoder volt	RO	30000		0		
70.97	Memory for encoder termination	RO	30000		1		
70.98	Memory for encoder offset	RO	30000		0		
70.99	Memory for encoder lines	RO	30000	1024		4096	

70.01	**Parameter memory field**															
70.58	**Parameter memory field**															
Variants	Unidrive SP, Unidrive ES, Digitax ST															
Drive modes	Open loop, Closed-loop vector, Servo															
Coding	Bit	Txt	VM	RO	US	RW										
				1	1											
Range	Open loop, Closed-loop vector, Servo															
Default	Open loop, Closed-loop vector, Servo															
Linked to																
Update rate	Background read															

Parameters from Pr **70.01** through to Pr **70.58** are used as part of a memory field required for the Elevator Solution Software operation.

70.59	**Fast start monitoring (Trip t062)**															
Variants	Unidrive SP, Unidrive ES, Digitax ST															
Drive modes	Open loop, Closed-loop vector, Servo															
Coding	Bit	Txt	VM	RO	US	RW										
					1	1										
Range	Open loop, Closed-loop vector, Servo						0 to 10,000mm									
Default	Open loop, Closed-loop vector, Servo						100									
Linked to																
Update rate	Background read															

During the Fast start the position is monitored for incorrect movement. The Fast start monitor causes the drive to trip immediately t062 if incorrect movement is detected during the Fast start. Movement must exceed the distance set-up in Pr **70.59** in mm and where the distance is set in Pr **70.59** > 0.

If the Fast Start is not used or the monitoring function is not required this can be disabled by setting Pr **70.59** = 0.

70.63	**Position display mode**															
Variants	Unidrive SP, Unidrive ES, Digitax ST															
Drive modes	Open loop, Closed-loop vector, Servo															
Coding	Bit	Txt	VM	RO	US	RW										
					1	1										
Range	Open loop, Closed-loop vector, Servo						0 to 1									
Default	Open loop, Closed-loop vector, Servo						0									
Linked to																
Update rate	Background read															

In version **V1.22.00** an additional display of the lift car position is available with Pr **20.38**. There are two modes of operation possible for the lift car position which are selected with Pr **70.63** as follows:

Pr **70.63** = 0: Pr **20.38** displays the position relative to the last stop in mm. The position is displayed during the travel and reset = 0 on removal of the speed selection.

Pr **70.63** <> 0: Pr **20.38** displays the absolute position of the lift car in the shaft. The reference to the absolute position can be done by setting Pr **20.38** at stop to the absolute position. The position change will be calculated from the motor encoder when the drive is powered. The absolute position can be used as a SSI output using the Solutions Module *SM-Universal Encoder Plus*. For more information refer to the *SM-Universal Encoder Plus User Guide*. Because of rope slip, the position reference can be lost after some time. The position is displayed continuously in Pr **20.38**.

The default setting for Pr **70.63** = 0.

70.65	**Elevator Solution Software error detection control**															
Variants	Unidrive SP, Unidrive ES, Digitax ST															
Drive modes	Open loop, Closed-loop vector, Servo															
Coding	Bit	Txt	VM	RO	US	RW										
					1	1										
Range	Open loop, Closed-loop vector, Servo						0 to 1001001									
Default	Open loop, Closed-loop vector, Servo						0									
Linked to																
Update rate	Background read															

The following three monitoring functions for the Elevator Solution Software can be disabled by setting Pr **70.65** = 1001001. This can be used to allow initial set-up without monitoring trips being generated, or for fault finding in the system. For customer operation, it is recommended that the monitoring is enabled Pr **70.65** = 0.

Monitoring functions and trips:

t074 = Fast disable monitoring trip
t075 = STO input monitoring trip
t078 = Motor contactor monitoring trip

70.66	**Solutions Module last trip code (SLX.Er)**															
Variants	Unidrive SP, Unidrive ES, Digitax ST															
Drive modes	Open loop, Closed-loop vector, Servo															
Coding	Bit	Txt	VM	RO	US	RW										
				1	1											
Range	Open loop, Closed-loop vector, Servo						0 to 255									
Default	Open loop, Closed-loop vector, Servo						0									
Linked to																
Update rate	Background read															

Pr **70.66** displays the last Solutions Module trip for the SM-Applications Module which is running the Elevator Solution Software in slot 3 (Pr **17.50**)

70.67	**Elevator Solution Software line last trip**															
Variants	Unidrive SP, Unidrive ES, Digitax ST															
Drive modes	Open loop, Closed-loop vector, Servo															
Coding	Bit	Txt	VM	RO	US	RW										
				1	1											
Range	Open loop, Closed-loop vector, Servo						0 to 32bit									
Default	Open loop, Closed-loop vector, Servo						0									
Linked to																
Update rate	Background read															

Pr **70.67** displays the Elevator Solution Software line for the last trip for the Solutions Module in slot 3 (Pr **17.48**)

70.68	**kHz switch up delay**															
Variants	Unidrive SP, Unidrive ES, Digitax ST															
Drive modes	Open loop, Closed-loop vector, Servo															
Coding	Bit	Txt	VM	RO	US	RW										
					1	1										
Range	Open loop, Closed-loop vector, Servo						0 to 1000 ms									
Default	Open loop, Closed-loop vector, Servo						250									
Linked to																
Update rate	Background read															

Pr **70.68** is used in the long life control as the delay time to increase the switching frequency (Pr **5.18**).

70.69	**kHz switch down delay**															
Variants	Unidrive SP, Unidrive ES, Digitax ST															
Drive modes	Open loop, Closed-loop vector, Servo															
Coding	Bit	Txt	VM	RO	US	RW										
					1	1										
Range	Open loop, Closed-loop vector, Servo						0 to 1000 ms									
Default	Open loop, Closed-loop vector, Servo						50									
Linked to																
Update rate	Background read															

Pr **70.68** is used in the long life control for the delay time to decrease the switching frequency (Pr **5.18**).

70.70	**Maximum IGBT junction temperature for last travel**															
Variants	Unidrive SP, Unidrive ES, Digitax ST															
Drive modes	Open loop, Closed-loop vector, Servo															
Coding	Bit	Txt	VM	RO	US	RW										
				1	1											
Range	Open loop, Closed-loop vector, Servo						0 to 135 °C									
Default	Open loop, Closed-loop vector, Servo						0									
Linked to																
Update rate	Background read															

This parameter holds the maximum IGBT junction temperature for the last travel.

70.71	**Travel counter**															
Variants	Unidrive SP, Unidrive ES, Digitax ST															
Drive modes	Open loop, Closed-loop vector, Servo															
Coding	Bit	Txt	VM	RO	US	RW										
					1	1										
Range	Open loop, Closed-loop vector, Servo						0 to 2 x10 ^{9}									
Default	Open loop, Closed-loop vector, Servo						0									
Linked to																
Update rate	Background read															

The travel counter increments during operation and at the completion of each travel, this can be used for an indication of the number of cycles completed for the system.

70.72	**Accumulator: IGBT temperature x travel counter**															
Variants	Unidrive SP, Unidrive ES, Digitax ST															
Drive modes	Open loop, Closed-loop vector, Servo															
Coding	Bit	Txt	VM	RO	US	RW										
					1	1										
Range	Open loop, Closed-loop vector, Servo						0 to 2 x10 ^{9}									
Default	Open loop, Closed-loop vector, Servo						0									
Linked to																
Update rate	Background read															

70.73	**Average IGBT junction temperature delta**															
Variants	Unidrive SP, Unidrive ES, Digitax ST															
Drive modes	Open loop, Closed-loop vector, Servo															
Coding	Bit	Txt	VM	RO	US	RW										
					1	1										
Range	Open loop, Closed-loop vector, Servo						0 to 135 °C									
Default	Open loop, Closed-loop vector, Servo						0									
Linked to																
Update rate	Background read															

Displays the average IGBT junction temperature calculated from both Pr **70.70**, Pr **70.71** and Pr **70.72**

70.74	**Elevator kHz control**															
Variants	Unidrive SP, Unidrive ES, Digitax ST															
Drive modes	Open loop, Closed-loop vector, Servo															
Coding	Bit	Txt	VM	RO	US	RW										
					1	1										
Range	Open loop, Closed-loop vector, Servo						OFF (0) or On (1)									
Default	Open loop, Closed-loop vector, Servo						On (1)									
Linked to																
Update rate	Background read															

Control disabled Pr **70.74** = 0

Lifetime control Pr **70.74** = 1

The Unidrive SP and Elevator Solution Software uses the drives thermal model to monitor the power stage temperatures for the longlife control. The monitored power stage temperatures are then used by the Elevator Solution Software to optimize the control and prevent excessive power stage temperature. In addition to the maximum power stage temperature, the change of power stage temperature (ΔT) during operation is also important for the lifetime of the power electronics.

This control method eliminates thermal distortion due to excessive power stage temperatures.

The new longlife control function introduced in the Elevator Solution Software provides an extended lifetime of the power electronics independent from the setting of the switching frequency and load. This function is enabled as default by Pr **70.74** = 1 and ensures a maximum power stage ΔT temperature change of 40 °C is not exceeded.

A maximum power stage ΔT temperature change of 40 °C ensures a product lifetime of 10 years for a lift with 500 travels per day and 200 days per year.

With some systems, where the drive size selected results in the drive operating close to its maximum rating for extended periods, there may be a short increase in the acoustic noise at low speeds. If the low speed acoustic noise is too high, the temperature threshold in Pr **70.76** may be increased from the default 40 °C for elevators with low travels per day. It should be noted that the expected minimum travel count will be halved if the temperature change is increased by 10 °C.

The actual temperature change during the last travel can be viewed in Pr **70.70**, furthermore Pr **70.71** shows the number of travels and Pr **70.73** the average temperature change during these travels which can be used to estimate the expected lifetime.

Parameter	Description	Detail
Pr **05.18**	Switching frequency	Pr **5.18** = 4 (12 kHz)
Pr **70.74**	EnableFSControl_Par	OFF (0) or On (1)
Pr **71.76**	SFM_FP_Threshold_PAR	Default = 40 % user adjustable
Pr **71.77**	SFM_FP_FULL_Time_PAR (12 kHz)	Default = 0 ms, user adjustable
Pr **71.78**	SFM_FP_HALF_Time_PAR (6 kHz)	Default = 0 ms, user adjustable

70.75	**Threshold for switching frequency increase**															
Variants	Unidrive SP, Unidrive ES, Digitax ST															
Drive modes	Open loop, Closed-loop vector, Servo															
Coding	Bit	Txt	VM	RO	US	RW										
					1	1										
Range	Open loop, Closed-loop vector, Servo						0 to 100 °C									
Default	Open loop, Closed-loop vector, Servo						25									
Linked to																
Update rate	Background read															

This parameter defines the temperature at which the long life control will increase the switching frequency.

70.76	**Threshold for switching frequency decrease**															
Variants	Unidrive SP, Unidrive ES, Digitax ST															
Drive modes	Open loop, Closed-loop vector, Servo															
Coding	Bit	Txt	VM	RO	US	RW										
					1	1										
Range	Open loop, Closed-loop vector, Servo						0 to 100 °C									
Default	Open loop, Closed-loop vector, Servo						40									
Linked to																
Update rate	Background read															

This parameter defines the temperature at which the long life control will decrease the switching frequency.

70.78	**Actual IGBT temperature change**															
Variants	Unidrive SP, Unidrive ES, Digitax ST															
Drive modes	Open loop, Closed-loop vector, Servo															
Coding	Bit	Txt	VM	RO	US	RW										
					1	1										
Range	Open loop, Closed-loop vector, Servo						0 to 135 °C									
Default	Open loop, Closed-loop vector, Servo						0									
Linked to																
Update rate	Background read															

This parameter displays the actual IGBT junction temperature.

70.80	**Load measurement value**															
Variants	Unidrive SP, Unidrive ES, Digitax ST															
Drive modes	Open loop, Closed-loop vector, Servo															
Coding	Bit	Txt	VM	RO	US	RW										
				1	1											
Range	Open loop, Closed-loop vector, Servo						0 to 400 %									
Default	Open loop, Closed-loop vector, Servo						0									
Linked to																
Update rate	Background read															

Indicates the percentage load measured during the start of the last travel when enabled with Pr **20.08** > 0 ms.

70.81	**Freeze protection threshold (Trip t073)**															
Variants	Unidrive SP, Unidrive ES, Digitax ST															
Drive modes	Open loop, Closed-loop vector, Servo															
Coding	Bit	Txt	VM	RO	US	RW										
					1	1										
Range	Open loop, Closed-loop vector, Servo						-15 to 0 °C									
Default	Open loop, Closed-loop vector, Servo						0									
Linked to																
Update rate	Background read															

This parameter is used to define the threshold level for a temperature monitoring trip to be generated. If either of the following drive temperature levels, Pr **7.04**, Pr **7.05** or Pr **7.06** exceeds the threshold value on completion of the travel a **t073** trip will be generated notifying the user that the system is operating outside of the recommended temperature.

70.82	**Variable stator resistance memory, open loop control**															
Variants	Unidrive SP, Unidrive ES, Digitax ST															
Drive modes	Open loop															
Coding	Bit	Txt	VM	RO	US	RW										
					1	1										
Range	Open loop						0 to 2 x10 ^{9}									
Default	Open loop						0									
Linked to																
Update rate	Background read															

This parameter is used for the open loop variable stator resistance control used during the start to provide increased levels of torque.

70.83	**Current limit memory**															
Variants	Unidrive SP, Unidrive ES, Digitax ST															
Drive modes	Open loop, Closed-loop vector, Servo															
Coding	Bit	Txt	VM	RO	US	RW										
					1	1										
Range	Open loop, Closed-loop vector, Servo						0 to 2 x10 ^{9}									
Default	Open loop, Closed-loop vector, Servo						0									
Linked to																
Update rate	Background read															

This parameter is used as the memory location for the variable current limit which is used for both controlled stopping and UPS operation.

70.84	**Evacuation rescue supply active**															
Variants	Unidrive SP, Unidrive ES, Digitax ST															
Drive modes	Open loop, Closed-loop vector, Servo															
Coding	Bit	Txt	VM	RO	US	RW										
					1	1										
Range	Open loop, Closed-loop vector, Servo						0 or 1									
Default	Open loop, Closed-loop vector, Servo						0									
Linked to																
Update rate	Background read															

This parameter is used during the emergency evacuation and the UPS control to indicate when the rescue power supply is connected and active.

70.86	**Shaft efficiency**															
Variants	Unidrive SP, Unidrive ES, Digitax ST															
Drive modes	Open loop, Closed-loop vector, Servo															
Coding	Bit	Txt	VM	RO	US	RW										
					1	1										
Range	Open loop, Closed-loop vector, Servo						0 to 100 %									
Default	Open loop, Closed-loop vector, Servo						0									
Linked to																
Update rate	Background read															

The shaft efficiency is used to optimize the load measurement, at default this is defined at 85 % efficient.

70.87	**Speed selection filter**															
Variants	Unidrive SP, Unidrive ES, Digitax ST															
Drive modes	Open loop, Closed-loop vector, Servo															
Coding	Bit	Txt	VM	RO	US	RW										
					1	1										
Range	Open loop, Closed-loop vector, Servo						0 to 200 ms									
Default	Open loop, Closed-loop vector, Servo						0									
Linked to																
Update rate	Background read															

The transition between operating speeds for the lift are determined by the speed selections on the drives control terminals. If the intermediate speed selections are not definite for example with binary speed selection spurious control could occur.

To exclude the influence of the intermediate speed selections a filter is available in Pr **70.87** which can be adjusted to the time of the intermediate states. Pr **70.87** can only be adjusted using the SM-Keypad Plus or the PC Software CTSoft / LiftSP.

70.90	**Memory for current demand filter**															
Variants	Unidrive SP, Unidrive ES, Digitax ST															
Drive modes	Open loop, Closed-loop vector, Servo															
Coding	Bit	Txt	VM	RO	US	RW										
					1	1										
Range	Open loop, Closed-loop vector, Servo						0 to 2 x10 ^{9}									
Default	Open loop, Closed-loop vector, Servo						0									
Linked to																
Update rate	Background read															

For operation mode change.

70.91	**Memory for current loop Kp-gain**															
Variants	Unidrive SP, Unidrive ES, Digitax ST															
Drive modes	Open loop, Closed-loop vector, Servo															
Coding	Bit	Txt	VM	RO	US	RW										
					1	1										
Range	Open loop, Closed-loop vector, Servo						0 to 2 x10 ^{9}									
Default	Open loop, Closed-loop vector, Servo						20 open loop 150 closed loop vector, servo									
Linked to																
Update rate	Background read															

For operation mode change.

70.92	**Memory for current loop Ki-gain**															
Variants	Unidrive SP, Unidrive ES, Digitax ST															
Drive modes	Open loop, Closed-loop vector, Servo															
Coding	Bit	Txt	VM	RO	US	RW										
					1	1										
Range	Open loop, Closed-loop vector, Servo						0 to 2 x 10 ^{9}									
Default	Open loop, Closed-loop vector, Servo						40 open loop 2000 closed loop vector, servo									
Linked to																
Update rate	Background read															

For operation mode change.

70.93	**Memory for change of operation mode**															
Variants	Unidrive SP, Unidrive ES, Digitax ST															
Drive modes	Open loop, Closed-loop vector, Servo															
Coding	Bit	Txt	VM	RO	US	RW										
					1	1										
Range	Open loop, Closed-loop vector, Servo						0 to 2 x 10 ^{9}									
Default	Open loop, Closed-loop vector, Servo						0									
Linked to																
Update rate	Background read															

For operation mode change.

70.94	**Memory for encoder slot**															
Variants	Unidrive SP, Unidrive ES, Digitax ST															
Drive modes	Open loop, Closed-loop vector, Servo															
Coding	Bit	Txt	VM	RO	US	RW										
					1	1										
Range	Open loop, Closed-loop vector, Servo						0 to 2 x 10 ^{9}									
Default	Open loop, Closed-loop vector, Servo						0									
Linked to																
Update rate	Background read															

For operation mode change.

70.95	**Memory for encoder type**															
Variants	Unidrive SP, Unidrive ES, Digitax ST															
Drive modes	Open loop, Closed-loop vector, Servo															
Coding	Bit	Txt	VM	RO	US	RW										
					1	1										
Range	Open loop, Closed-loop vector, Servo						0 to 2 x 10 ^{9}									
Default	Open loop, Closed-loop vector, Servo						0									
Linked to																
Update rate	Background read															

For operation mode change.

70.96	**Memory for encoder volt**															
Variants	Unidrive SP, Unidrive ES, Digitax ST															
Drive modes	Open loop, Closed-loop vector, Servo															
Coding	Bit	Txt	VM	RO	US	RW										
					1	1										
Range	Open loop, Closed-loop vector, Servo						0 to 2 x 10 ^{9}									
Default	Open loop, Closed-loop vector, Servo						0									
Linked to																
Update rate	Background read															

For operation mode change.

70.97	**Memory for encoder termination**															
Variants	Unidrive SP, Unidrive ES, Digitax ST															
Drive modes	Open loop, Closed-loop vector, Servo															
Coding	Bit	Txt	VM	RO	US	RW										
					1	1										
Range	Open loop, Closed-loop vector, Servo						0 to 2 x 10 ^{9}									
Default	Open loop, Closed-loop vector, Servo						1									
Linked to																
Update rate	Background read															

For operation mode change.

70.98	**Memory for encoder offset**															
Variants	Unidrive SP, Unidrive ES, Digitax ST															
Drive modes	Open loop, Closed-loop vector, Servo															
Coding	Bit	Txt	VM	RO	US	RW										
					1	1										
Range	Open loop, Closed-loop vector, Servo						0 to 2 x 10 ^{9}									
Default	Open loop, Closed-loop vector, Servo						0									
Linked to																
Update rate	Background read															

For operation mode change.

70.99	**Memory for encoder lines**															
Variants	Unidrive SP, Unidrive ES, Digitax ST															
Drive modes	Open loop, Closed-loop vector, Servo															
Coding	Bit	Txt	VM	RO	US	RW										
					1	1										
Range	Open loop, Closed-loop vector, Servo						0 to 2 x 10 ^{9}									
Default	Open loop, Closed-loop vector, Servo						1024 open loop, closed loop vector 4096, servo									
Linked to																
Update rate	Background read															

For operation mode change.

7.11 Menu 71 parameters

Parameter	Description	Type	Range	Default			Units
				OL	VT	SV	
71.00 to 71.29	Parameter memory field begin	RO	30000				
71.30	Parameter memory field end	RO	30000				
71.50	Tension control Kp gain	RW	30000		0		
71.51	Tension control timer	RW	30000		0		ms
71.52	Tension control position error	RO	30000				
71.53	Start locking position error	RO	30000				
71.54	Peak curve 2 speed enable	RW	1		0		
71.55	Start up delay	RW	30000		200		ms
71.56	Double speed loop gains	RW	3		0		
71.57	Thermistor threshold	RW	30000		33		
71.58	ENP trip code	RO	30000				
71.59	Rapid slow down enable	RW	1		0		
71.60	Peak curve state	RO	30000				
71.61	Peak curve constant speed time	RW	30000		0		ms
71.62	Brake release control enable	RW	1		0		
71.63	Brake release load	RO	30000				
71.64	Direct stop source	RW	30000		0		
71.70	Additional speed 11	RW	10000		0		mm/s
71.71	Additional speed 12	RW	10000		0		mm/s
71.72	Additional speed 13	RW	10000		0		mm/s
71.73	Additional speed 14	RW	10000		0		mm/s
71.74	Additional speed 15	RW	10000		0		mm/s

71.01	**Parameter memory field**															
71.30	**Parameter memory field**															
Variants	Unidrive SP, Unidrive ES, Digitax ST															
Drive modes	Open loop, Closed-loop vector, Servo															
Coding	Bit	Txt	VM	RO	US	RW										
				1	1											
Range	Open loop, Closed-loop vector, Servo															
Default	Open loop, Closed-loop vector, Servo															
Linked to																
Update rate	Background read															

Parameters from Pr **71.01** through to Pr **71.30** are used as part of a memory field required for the Elevator Solution Software.

71.50	**Tension control Kp gain**															
Variants	Unidrive SP, Unidrive ES, Digitax ST															
Drive modes	Open loop, Closed-loop vector, Servo															
Coding	Bit	Txt	VM	RO	US	RW										
					1	1										
Range	Open loop, Closed-loop vector, Servo						2 - 10									
Default	Open loop, Closed-loop vector, Servo						0									
Linked to																
Update rate	Background read															

Tension control, Kp proportional gain for start optimization, range setting 2 – 10. Used to relieve tension from brake during start and avoid jerk.

71.51	**Tension control timer**															
Variants	Unidrive SP, Unidrive ES, Digitax ST															
Drive modes	Open loop, Closed-loop vector, Servo															
Coding	Bit	Txt	VM	RO	US	RW										
					1	1										
Range	Open loop, Closed-loop vector, Servo						200 - 1000									
Default	Open loop, Closed-loop vector, Servo						0									
Linked to																
Update rate	Background read															

Tension control, time for start optimization, range setting 200 ms – 1000 ms. Used along with Pr **71.50** Kp proportional gain to relieve tension from brake during start and avoid jerk.

71.52	**Tension control position error**															
Variants	Unidrive SP, Unidrive ES, Digitax ST															
Drive modes	Open loop, Closed-loop vector, Servo															
Coding	Bit	Txt	VM	RO	US	RW										
				1	1											
Range	Open loop, Closed-loop vector, Servo															
Default	Open loop, Closed-loop vector, Servo						0									
Linked to																
Update rate	Background read															

Position error during start optimization.

71.53	**Start locking position error**															
Variants	Unidrive SP, Unidrive ES, Digitax ST															
Drive modes	Open loop, Closed-loop vector, Servo															
Coding	Bit	Txt	VM	RO	US	RW										
					1	1										
Range	Open loop, Closed-loop vector, Servo															
Default	Open loop, Closed-loop vector, Servo						0									
Linked to																
Update rate	Background read															

Position error during start locking.

71.54	**2 speed enable**															
Variants	Unidrive SP, Unidrive ES, Digitax ST															
Drive modes	Open loop, Closed-loop vector, Servo															
Coding	Bit	Txt	VM	RO	US	RW										
					1	1										
Range	Open loop, Closed-loop vector, Servo						OFF (0) On (1)									
Default	Open loop, Closed-loop vector, Servo						OFF (0)									
Linked to																
Update rate	Background read															

Peak curve operation 2 speed distance control enable.

71.55	Start up delay															
Variants	Unidrive SP, Unidrive ES, Digitax ST															
Drive modes	Open loop, Closed-loop vector, Servo															
Coding	Bit	Txt	VM	RO	US	RW										
					1	1										
Range	Open loop, Closed-loop vector, Servo															
Default	Open loop, Closed-loop vector, Servo						0									
Linked to																
Update rate	Background read															

Elevator Solution Software start up delay on Power ON can be used to prevent spurious noise induced signals generating incorrect control signals.

71.56	Double speed loop gains															
Variants	Unidrive SP, Unidrive ES, Digitax ST															
Drive modes	Open loop, Closed-loop vector, Servo															
Coding	Bit	Txt	VM	RO	US	RW										
					1	1										
Range	Open loop, Closed-loop vector, Servo						0 - 3									
Default	Open loop, Closed-loop vector, Servo						0									
Linked to																
Update rate	Background read															

This parameter allows the speed loop gains range settings to be increased:
1: Double I- Gains
2: Double P- Gains
3: Double P- Gains and I- Gains

71.57	Thermistor threshold															
Variants	Unidrive SP, Unidrive ES, Digitax ST															
Drive modes	Open loop, Closed-loop vector, Servo															
Coding	Bit	Txt	VM	RO	US	RW										
					1	1										
Range	Open loop, Closed-loop vector, Servo						0 – 100 %									
Default	Open loop, Closed-loop vector, Servo						33									
Linked to																
Update rate	Background read															

Programmable TH- Threshold, for use with drive incompatible motor thermistors.

71.58	ENP trip code															
Variants	Unidrive SP, Unidrive ES, Digitax ST															
Drive modes	Open loop, Closed-loop vector, Servo															
Coding	Bit	Txt	VM	RO	US	RW										
					1	1										
Range	Open loop, Closed-loop vector, Servo															
Default	Open loop, Closed-loop vector, Servo															
Linked to																
Update rate	Background read															

Encoder nameplate function trip details.

71.59	**Rapid slow down enable**															
Variants	Unidrive SP, Unidrive ES, Digitax ST															
Drive modes	Open loop, Closed-loop vector, Servo															
Coding	Bit	Txt	VM	RO	US	RW										
					1	1										
Range	Open loop, Closed-loop vector, Servo															
Default	Open loop, Closed-loop vector, Servo															
Linked to																
Update rate	Background read															

Enable for rapid slow down prevent increase in speed when fast stop is applied during acceleration.

71.60	**Peak curve state**															
Variants	Unidrive SP, Unidrive ES, Digitax ST															
Drive modes	Open loop, Closed-loop vector, Servo															
Coding	Bit	Txt	VM	RO	US	RW										
					1	1										
Range	Open loop, Closed-loop vector, Servo															
Default	Open loop, Closed-loop vector, Servo															
Linked to																
Update rate	Background read															

Actual peak curve operation state.

0 – No peak curve

1 – Peak curve detected and calculation of set distance

2 – Waiting for approaching point where acceleration has to be decreased

3 – Waiting for top speed

4 – Deceleration

5 – Peak curve completed

71.61	**Peak curve constant speed time**															
Variants	Unidrive SP, Unidrive ES, Digitax ST															
Drive modes	Open loop, Closed-loop vector, Servo															
Coding	Bit	Txt	VM	RO	US	RW										
					1	1										
Range	Open loop, Closed-loop vector, Servo															
Default	Open loop, Closed-loop vector, Servo															
Linked to																
Update rate	Background read															

Pr **71.61** = time in ms for flat top peak curve operation used to further enhance performance, maximum settings for Pr **71.61** are 5000 ms. The minimum setting of 0 ms will disable the flat top peak curve operation, Pr **20.13** = 5 plus Pr **71.61** > 0 enables flat top peak curve operation and bypasses standard control with Pr **18.47** = On (1) and Pr **20.13** = 1 to 4.

71.62	Brake release control enable															
Variants	Unidrive SP, Unidrive ES, Digitax ST															
Drive modes	Open loop, Closed-loop vector, Servo															
Coding	Bit	Txt	VM	RO	US	RW										
					1	1										
Range	Open loop, Closed-loop vector, Servo															
Default	Open loop, Closed-loop vector, Servo															
Linked to																
Update rate	Background read															

Enable for memorizing actual brake apply load for next start feed forward.

71.63	Brake release load															
Variants	Unidrive SP, Unidrive ES, Digitax ST															
Drive modes	Open loop, Closed-loop vector, Servo															
Coding	Bit	Txt	VM	RO	US	RW										
					1	1										
Range	Open loop, Closed-loop vector, Servo															
Default	Open loop, Closed-loop vector, Servo															
Linked to																
Update rate	Background read															

Measured brake apply load during stop.

71.64	Direct stop source															
Variants	Unidrive SP, Unidrive ES, Digitax ST															
Drive modes	Open loop, Closed-loop vector, Servo															
Coding	Bit	Txt	VM	RO	US	RW										
					1	1										
Range	Open loop, Closed-loop vector, Servo						0 – 6									
Default	Open loop, Closed-loop vector, Servo						0									
Linked to																
Update rate	Background read															

Select start condition of direct-to-floor mode 5:

0 - all speed bits = 0, x - speed bit x = 0 (x = 1 – 6).

71.70	Speed selection 11															
Variants	Unidrive SP, Unidrive ES, Digitax ST															
Drive modes	Open loop, Closed-loop vector, Servo															
Coding	Bit	Txt	VM	RO	US	RW										
					1	1										
Range	Open loop, Closed-loop vector, Servo						0 to 10,000 mm/s									
Default	Open loop, Closed-loop vector, Servo						0									
Linked to																
Update rate	Background read															

Speed 11 in mm/s when binary selection equal 11.

71.71	**Speed selection 12**															
Variants	Unidrive SP, Unidrive ES, Digitax ST															
Drive modes	Open loop, Closed-loop vector, Servo															
Coding	Bit	Txt	VM	RO	US	RW										
					1	1										
Range	Open loop, Closed-loop vector, Servo						0 to 10,000 mm/s									
Default	Open loop, Closed-loop vector, Servo						0									
Linked to																
Update rate	Background read															

Speed 12 in mm/s when binary selection equal 12.

71.72	**Speed selection 13**															
Variants	Unidrive SP, Unidrive ES, Digitax ST															
Drive modes	Open loop, Closed-loop vector, Servo															
Coding	Bit	Txt	VM	RO	US	RW										
					1	1										
Range	Open loop, Closed-loop vector, Servo						0 to 10,000 mm/s									
Default	Open loop, Closed-loop vector, Servo						0									
Linked to																
Update rate	Background read															

Speed 13 in mm/s when binary selection equal 13.

71.73	**Speed selection 14**															
Variants	Unidrive SP, Unidrive ES, Digitax ST															
Drive modes	Open loop, Closed-loop vector, Servo															
Coding	Bit	Txt	VM	RO	US	RW										
					1	1										
Range	Open loop, Closed-loop vector, Servo						0 to 10,000 mm/s									
Default	Open loop, Closed-loop vector, Servo						0									
Linked to																
Update rate	Background read															

Speed 14 in mm/s when binary selection equal 14.

71.74	**Speed selection 15**															
Variants	Unidrive SP, Unidrive ES, Digitax ST															
Drive modes	Open loop, Closed-loop vector, Servo															
Coding	Bit	Txt	VM	RO	US	RW										
					1	1										
Range	Open loop, Closed-loop vector, Servo						0 to 10,000 mm/s									
Default	Open loop, Closed-loop vector, Servo						0									
Linked to																
Update rate	Background read															

Speed 15 in mm/s when binary selection equal 15.

8 Set-up

For set-up of the Unidrive SP Elevator Solution Software, follow the instructions given in this section. Software tools are also available to assist with the commissioning / start up and set-up of the Unidrive SP elevator solution, refer to Chapter 11 *Commissioning / start up software tools* .

Table 8-1 Initial set-up and configuration

Initial configuration and set-up procedure		
Before power-up	Motor connections	Make motor connections ensuring correction orientation for closed loop operation. Ensure shield and grounding connections follow the recommendations for EMC.
	Brake connections	Make connections for brake control and set-up for either elevator control, or Unidrive SP and the Elevator Solution Software control.
	Motor contactor connections	Make connections for motor contactor control for either the elevator controller or Unidrive SP and the Elevator Solution Software. For servo mode a Fast disable may also be required to prevent any arcing of the output motor contactors.
	Encoder feedback connections	Connect encoder feedback ensuring correct cable with shielding is used and is terminated correctly. Ensure correct connections for orientation of feedback with respect to motor.
	Encoder output connections	Fit a Solutions Module to provide simulated encoder output if required.
	Control connections	Make all connections from the elevator controller to the Unidrive SP.
Power-up Parameter configuration	Control connections	Ensure all control connections required for elevator speed selection and direction control are configured, along with brake control and motor contactor control, if control is required from the Unidrive SP Elevator Solution Software.
	Motor	Set-up all motor map parameters
	Encoder feedback	Set-up encoder feedback connected to Unidrive SP along with simulated encoder output if required for the elevator controller.
	Elevator parameters	Set-up elevator control parameters. • Rated speed mm/s • Preset speeds • Accel, Decel ramp rates • Direction control • Jerks • Brake control • Motor contactor control
Autotune		An autotune should be carried out to set-up the drive to the motor. • Voltage offset [OL] • Power factor [OL CL] • Stator resistance [OL CL SV] • Transient inductance [OL CL SV] • Stator inductance [CL] • Phase offset [SV] For Servo operation an autotune must be carried out to derive the required encoder phase offset value, unless this is already in which case this can be entered manually into the drive (**F11**, Pr **3.25**). 1. For a rotating autotune this must be carried out with no load present on the motor. 2. For a static autotune this is carried out with the mechanical brake applied at the motor, in this case the level of load present is unimportant (static autotune available with Lift Software Solution > V01.23.00). 3. With Elevator Solution Software versions < V01.23.00 where load is present the system should be balanced and a rotating autotune carried out. The rotating autotune can be carried out assuming sufficient distance is available is available for the rotating autotune to be completed (i.e. motor rotates by 2 mechanical revolutions).

8.1 Autotune

For the initial set-up of the elevator motor, adjustment of the motor control parameters must be carried out, this is performed by the drive through an automatic self-tuning autotune. There are two possible autotunes available, a "rotating" and "static" autotune.

During the rotating autotune the elevator must be operated manually, therefore the inspection command has to be provided. If the inspection command is active and the drive is not enabled / the motor does not run, refer to configuration of the control terminals and parameter settings within the drive. The rotating autotune should be carried out with no load on the motor.

8.2 Static autotune

The static autotune function for Servo operation is available with Elevator Solution Software > 01.23.00. For software versions < 01.23.00 only a rotating autotune is available for Servo operation.

8.2.1 PM servo motor rotating autotune (Pr 0.40 [Pr 5.12] = 2)

Measurement of the encoder phase offset is required for operation with PM servo motors in elevator applications to derive the absolute position. The rotating autotune function with Unidrive SP mode 2 (Pr **0.40** (Pr **5.12**) = 2) is only possible if the motor is not loaded. For elevator applications this means removal of the ropes, setting the counterweight on the ground and fixing the cabin.

8.2.2 PM servo motor stationary autotune

Using the stationary phase offset measurement (Pr **0.40** (Pr **5.12**) = 1) with Elevator Solution Software ≥V01.23.00 the phase offset can be measured with the system loaded and brake applied. In addition to the stationary phase offset measurement the motors stator resistance (Pr **5.17**) and inductance (Pr **5.24**) are also measured to set-up the current loop gains (Pr **4.13**, Pr **4.14**). The torque default setting for the autotune in Pr **21.27** is 20 % and the time required default setting is Pr **12.47** =10 s. Values of torque higher than 100 % should not be used. The autotune is based upon a small movement of the shaft when fixed by the motors brake. The maximum movement can be seen in Pr **2.29** in increments (1 increment = 1/65536 turn).

The condition for the servo motor stationary autotune is a fixed position using the motors mechanical brake. The motors brake has to be capable of withstanding an additional motor torque of approximately 20 % of the nominal motor torque, this being applied during the stationary autotune.

The stationary phase offset measurement takes the time set is Pr **12.47** to complete, during this time the enable signal must be present. During the phase offset measurement the phase offset in Pr **3.25** will increment 0 through to 360 to find the correct value, at the end of the test the measurement value in Pr **3.25** will be set-up and Pr **0.40** (Pr **5.12**) = 0.

NOTE

The stationary PM servo motor phase offset test is only available if the motor is fixed securely with the mechanical brake and a high resolution SinCos encoder of the following types is used: SC.Endat, SC.Hiper or SC.SSI. Motor cable connections and correct setting of the motor pole count and number of encoder lines are required for correct results.

Activation of PM servo motor stationary phase offset measurement

To activate the stationary phase offset measurement the following procedure should be followed:

1. Ensure brake is applied and is not lifted when the enable signal is applied to start the stationary phase offset measurement
   - Brake power supply can be removed to prevent brake operating
   - Ensure brake monitoring is disabled to avoid trips during stationary phase offset measurement
2. Initiate stationary autotune be setting (Pr **0.40** (Pr **5.12**) = 1)
3. Start inspection – drive display will change to "**run**"
   - Apply drive enable
4. Automatic change of parameter Pr **0.40** = 4
   - Static autotune
5. Stationary phase offset measurement (Pr **3.25** phase offset being calculated)
6. Stationary phase offset measurement completed (Pr **0.40** = 0, Pr **3.25** = phase offset)
7. Results saved

If the movement in Pr 2.29 is less than 1.00 the autotune should be repeated with the torque reference in Pr 21.27 doubled.

NOTE

The stationary PM servo motor phase offset measurement should be carried out a minimum of 3 times to ensure a consistent accurate value is derived. The maximum deviation between tests is 5 degrees, where the value is greater the test should be repeated ensuring the brake is securely closed.

Diagnostics for the PM servo motor stationary autotune

If the motor is not fixed securely and the motor starts to turn during the measurement, or if the resolution of the encoder is not high enough to estimate the servo motor offset a trip will be caused and the previous phase offset value before the autotune will be restored in Pr **3.25** unchanged.

If a trip is caused from the PM servo motor phase offset autotune at standstill, the following trips will be generated:

Table 8-2 Trip codes and explanations

Trip	Description	Explanation
t055	Forbidden movement	Will be caused if the motor is not fixed and has turned by 1/16th motor turns. Please check mechanical brakes.
t056	Insufficient encoder resolution	Will be caused if the encoder resolution is not sufficient to detect the phase angle. Please try again or check encoder resolution and setting.

NOTE

Because this phase offset measurement is carried out in a stationary position it is unable to identify incorrect motor cable connections, incorrect motor pole count settings for the motor or incorrect number of lines setting for the encoder.

8.3 Autotune, open loop vector

STATIC autotune	
For open loop vector control it is necessary to measure the motor's stator resistance Pr **5.17** and voltage offset Pr **5.23**. These can automatically be measured by the drive through a static autotune with the motor at standstill and the brake applied, Pr **0.40** = 1 as follows.	
1	Set **F14**, Pr **0.40** = 1, selecting static autotune
2	Apply an enable to Unidrive SP and maintain
3	Close the motor contactor(s) at the output of Unidrive SP
4	Note settings of Pr **5.17** and Pr **5.23**
5	Wait until **F14**, Pr **0.40** = 0, static autotune has completed
6	Remove enable to Unidrive SP and maintain
7	Open the motor contactor(s) at the output of Unidrive SP
8	Save parameters in Unidrive SP Pr **xx.00** = 1000

8.4 Autotune, closed loop vector

STATIC autotune	
To ensure best performance it is recommended that the motor's stator resistance Pr **5.17** and transient inductance Pr **5.24** be measured, these can be automatically carried out by the drive through a static autotune with the motor at standstill and the brake applied. It should also be noted that following the static autotune will set-up the current loop gains (F **41**,Pr **0.38,** Pr **4.13** & **F42**, Pr **0.39,** Pr **4.14**) automatically for the motor based on the resistance and inductance measurements from the static autotune.	
1	Set **F14**, Pr **0.40** = 1, selecting static autotune
2	Apply an enable to Unidrive SP and maintain
3	Close the motor contactor(s) at the output of Unidrive SP
4	Note settings of Pr **5.17** and Pr **5.24**
5	Note settings of **F41**, Pr **0.38,** Pr **4.13** and **F42**, Pr **0.39,** Pr **4.14**
6	Wait until **F14**, Pr **0.40** = 0, static autotune completed
7	Remove enable to Unidrive SP and maintain
8	Open the motor contactor(s) at the output of Unidrive SP
9	Save parameters in Unidrive SP Pr **xx.00** = 1000

For closed loop vector operation it is also possible to carry out a static autotune to set-up the current loop gains alone based on the motors resistance and inductance values stored in Pr **5.17** and Pr **5.24** as follows.

To carry out the static autotune for the current loop gains alone, set **F14**, Pr **0.40** = 4, selecting static current loop gains autotune.

For further optimization of the drive when operating in closed loop vector, a rotating autotune is also possible with the rotating autotune, it is necessary to remove the ropes from the sheave due to the motor having to run for several seconds.

ROTATING autotune – Full motor characteristics	
For complete optimization the Unidrive SP can measure in addition to the stator resistance Pr **5.17**, transient inductance Pr **5.24** and current loop gain set-up Pr **0.38,** Pr **4.13** & Pr **0.39,** Pr **4.14** the full motor characteristics.	
1	Set **F14**, Pr **0.40** = 2, select static autotune
2	Apply Inspection speed, enable and maintain
3	Close the motor contactor(s) at the output of Unidrive SP
4	Open brake
5	The motor should now rotate at inspection speed
6	Note settings of Pr **5.17** and Pr **5.24**
7	Note settings of **F41**, Pr **0.38,** Pr **4.13** and **F42**, Pr **0.39,** Pr **4.14**
8	Note settings of Pr **5.25**, Pr **5.29**, and Pr **5.30**
9	Wait until **F14**, Pr **0.40** = 0, Rotating autotune is complete
10	Remove inspection speed and enable
11	Apply brake
12	Open motor contactor(s) at the output of Unidrive SP
13	Save parameters in Unidrive SP Pr **xx.00** = 1000

8.5 Autotune, servo

The phase angle of magnetic rotor flux relative to the rotor's feedback device angular orientation, must be measured with an autotune, or if given on the motor's nameplate information, be entered into the Unidrive SP parameter **F11**, Pr **0.43**, Pr **3.25**.

Manual setting of the motor phase offset from motor nameplate

If the motor phase offset value is known and the connection of the output motor phases is U - V - W at the drive, proceed as follows

- Set parameter **F11**, Pr **0.43**, Pr **3.25** = Motor phase offset
- Save parameter in Unidrive SP Pr **xx.00** = 1000.

If the motor phase offset value is not known and not available on the motor nameplate, then an autotune must be carried out to derive this value. The rotating autotune must be carried out with no load present on the motor (ropes removed from sheave). In some systems a balanced load condition may be sufficient for the autotune to be carried out, or a static autotune can be completed as detailed in section 8.2 *Static autotune* on page 180.

ROTATING autotune - Measurement of the encoder phase angle - Full motor characteristics & current loop	
If the motor phase offset is not known or the connection of the motor phases is not U - V - W, the value can be measured automatically by the drive through an autotune. To get exact values it is necessary to have no load on the motor shaft, therefore remove the ropes from the sheave. If the elevator has very low friction it may be sufficient in some cases to have a balanced load in the car for the autotune.	
1	**F14**, Pr **0.40** = 2, Activate normal low speed autotune
2	Apply Inspection speed, enable and maintain
3	Close the motor contactor(s) at the output of Unidrive SP
4	Open brake
5	The motor will rotate at low speed for approximately 30 seconds.
If a trip ENC1 occurs swap motor cables U with V at the drive	
6	Note settings of Pr **0.43**, Pr **3.25**
7	Note settings of **F41**, Pr **0.38,** Pr **4.13** and **F42**, Pr **0.39,** Pr **4.14**
8	Note settings of Pr **5.17** and Pr **5.24**
9	Wait until **F14**, Pr **0.40** = 0, Normal low speed autotune complete
10	Remove inspection speed / enable
11	Apply brake
12	Open motor contactor(s) at the output of Unidrive SP
13	Save parameters in Unidrive SP Pr **xx.00** = 1000

STATIC autotune	
For best performance it is recommended that the motors stator resistance Pr **5.17** and transient inductance Pr **5.24** be measured, this can be automatically carried out by the drive through a static autotune at standstill with the brake applied. It should also be noted that following the static autotune will automatically set-up the current loop gains (**F41**, Pr **0.38,** Pr **4.13** & **F42**, Pr **0.39,** Pr **4.14**) for the motor based on the resistance and inductance measured during the Static autotune.	
1	Set **F14**, Pr **0.40** = 4, select Static autotune
2	Apply enable to Unidrive SP and maintain
3	Close the motor contactor(s) at the output of Unidrive SP
4	Note settings of Pr **5.17** and Pr **5.24**
5	Note settings of **F41**, Pr **0.38,** Pr **4.13** and **F42**, Pr **0.39,** Pr **4.14**
6	Wait until **F14**, Pr **0.40** = 0, Static autotune complete.
7	Remove enable to Unidrive SP and maintain
8	Open the motor contactor(s) at the output of Unidrive SP
9	Save parameters in Unidrive SP Pr **xx.00** = 1000

The current loop gains can only be set-up automatically through a static autotune at standstill with the brake applied. In order for this static autotune to be carried out correctly there must be values in both Pr **5.17** motor stator resistance and Pr **5.24** transient inductance. This autotune does not require an enable, as it is purely a calculation carried out inside the drive based on Pr **5.17** and Pr **5.24** and by setting **F14**, Pr **0.40** = 6, select Static current loop gains autotune.

NOTE

Following the autotune, the current loop gains calculated may be slightly high and require adjustment (acoustic noise from motor). If this is the case both **F41**, Pr **0.38**, Pr **4.13** and **F42**, Pr **0.39**, Pr **4.14** can be reduced.

8.6 First start with empty car

8.6.1 Activate first start

On the first start of the elevator it is important that the correct control terminals are configured for the required speed selection from the Elevator controller along with the enable and direction inputs.

It is also essential that the rotation of the motor phases and the encoder feedback connections be in the same direction for correct closed loop operation.

Activate first start	
Ensure enable, T31 is connected and the active current Pr **0.11**, Pr **4.02** is displayed	
Start with Inspection speed and check the active current display Pr **0.11**, Pr **4.02** and the shaft rotation	
If status display does not change to "run"	Check logic polarity Control terminals connections
If the motor active current Pr **0.11**, Pr **4.02** = **0.00**	Check logic polarity Control terminals Motor connections, contactors, brake
Following error trip (**t070** or **t071**)	Check encoder feedback Motor connections Encoder phase angle Motor map settings
If the motor shaft does not rotate	Check speed ref. selected **F50**, Pr **18.10** Run command is applied
If speed ref. **F50**, Pr **18.10** = 1810 (no speed reference selected)	Check terminal configuration for speed selection and status of speed selection
If It.AC trip occurs	Check load balance Motor phase offset (Servo mode) Motor connection
If motor turns shortly / stops with current	Check motor pole count **F09**, Pr **5.11** Encoder lines **F05**, Pr **3.34**
If motor turns opposite direction	Set direction invert **F23**, Pr **18.45** = 1
For closed loop vector and servo where speed instability is present during operation	Check encoder feedback cable connections and shielding Follow EMC recommendations to prevent induced noise onto feedback
Other trips	See Diagnostics section 12
If no trip	Continue with optimization refer to section 9 *Optimization* on page 185

8.6.2 Motor contactor / Brake control adjustment

To prevent over voltages at the motor windings and the drive output during motor contactor opening, the drive output should be disabled after the brake apply time is completed. The delay between the drive output disable and the opening of the motor contactor is displayed in Pr **20.20** Motor contactor delay time in ms.

NOTE

For operation in servo mode a Fast disable may be required. For more details please refer to section 4.19.5 *Fast disable* on page 65.

A negative value in Pr **20.20** indicates that the motor contactor opened while current was flowing, which should be prevented. In this case the brake apply time, **F38**, Pr **18.24** must be increased, at least, to the value of Pr **20.20.**

Motor contactor / Brake control adjustment	
Start normal floor level runs	
Check the motor contactor delay time	Pr **20.20** (ms)
Increase the brake apply delay time if a negative value is in Pr **20.20** (ms)	Increase brake apply time **F38**, Pr **18.24** (ms)
Positive values of 50...100 ms in (ms) Pr **20.20** are acceptable, for excessive values reduce brake apply delay.	Reduce brake apply time **F38**, Pr **18.24** (ms)

8.6.3 Adjustment of motor rated speed / slip

The motor rated speed and slip should be set-up correctly for induction machines controlled in open and closed loop vector. For open loop control the rated load rpm is used with the motor rated frequency to calculate the rated slip in Hz. For closed loop the rated load rpm is used with the motor rated frequency to determine the full load slip of the motor that is used by the vector control algorithm.

Incorrect settings for the motor rated slip can result in:

- Reduced efficiency of the motor
- Reduction of maximum torque available from the motor
- Reduced transient performance

Adjustment of motor rated speed / slip – manual with tachometer	
Select creep speed “V1” parameter F24, Pr **18.11**	
Ensure slip compensation enabled	Set Pr **5.27** = 1 (Default = 1)
Start inspection "UP" and "DOWN"	
Measure speed manually with tachometer	Target is **UP** speed = **DOWN** speed
If speed "UP" > "DOWN"	Reduce **F10**, Pr **5.08** in steps of 1...10
If speed "UP" < "DOWN"	Increase **F10**, Pr **5.08** in steps of 1...10

For servo mode, the rated load rpm defines the rated speed of the motor and is used in the thermal motor protection. Slip does not apply to a PM motor and servo operation.

8.6.4 Adjustment of variable stator resistance (Open loop)

Adjustment of variable stator resistance	
Adjustment of the elevator start in open loop can include the variable stator resistance function.	
Starting torque requires optimization for the Open loop mode to ensure smooth start and prevent rollback.	
Enable	Enable variable stator resistance control Pr **18.48** = On (1).
	Ensure auto tune has been carried out and values in Pr **5.17** Start and Pr **21.12** Travel.
Adjustment	Increase Pr **5.17** the start stator resistance to obtain the maximum rated torque from the motor. Value should be increased gradually in order to prevent overloading of the motor at the start during low speed.
	The transition time from the start torque to the travel torque is controlled through Pr **19.11** and should be kept as low as possible to avoid overloading the motor at the start during low speed.

9 Optimization

9.1 Open loop vector

For standard open loop control and maximum torque at low / zero speed, the timing sequence and brake control are essential and therefore have to be adjusted precisely.

Therefore the motor model has to be optimally configured, i.e. the motor stator resistance and slip compensation.

An autotune should be carried out and all motor related parameters set-up as accurately as possible. The motor rated speed / slip should be set-up initially from the motor's nameplate and where possible optimized manually with a tachometer as covered in Chapter 8 *Set-up* on page 179.

Optimization – open loop	
Jerk at start too high	
Start jerk	Adjust start jerk **F34**, Pr **19.14** e.g. ...300 mm/s^3 (Softer)
AND / OR	
Brake control	Adjust brake release delay **F37**, Pr **19.25** e.g. …500 ms
Start optimizer	Adjust speed for start optimizer Pr **18.18** e.g. ...300 mm/s
	Adjust time for start optimizer **F31**, Pr **19.28** e.g. … 1000 ms
	Adjust jerk for start optimizer Pr **19.17** e.g. … 50 mm/s^3
Jerk or backward rotation when brake releases	Increase speed for start optimizer Pr **18.18** e.g. … 500 mm/s^3
Ensure correct value of stator resistance	Stator resistance in Pr **5.17** can be derived from static autotune and further optimized manually if required.
Optimize constant speed	
Vibrations or overshoot present	Reduce slip compensation by increasing Pr **5.08** motor-rated speed.
	Disable Quasi-square wave to prevent over modulation Pr **5.20** = 0
Optimize stop	
High jerk as the elevator stops	Reduce stop jerk **F36**, Pr **19.16** e.g. ...500 mm/s^3 (Softer)
	Reduce zero speed threshold Pr **3.05** e.g. 0.5 ... 2 Hz

9.1.1 Adjustment of deceleration / positioning

Adjustment of deceleration positioning	
Check for correct speed selection Pr **18.10** reference value selected	If not correct, check the connections from elevator controller to the control terminal of Unidrive SP for selection of speed, Pr **18.10**
Check stopping distance V1, Pr **19.05**	Change V1 (creep speed) **F24**, Pr **18.11** or stop jerk level **F36**, Pr **19.16**
Check reference deceleration distance Pr **19.08**	Select speed for deceleration distance via control input from elevator controller Read selected speed in **F50**, Pr **18.10** Read reference distance in, Pr **19.08** Change Deceleration rate **F33,** Pr **2.21** Run jerk **F35**, Pr **19.15**
Start normal floor levelling runs	Check the measured creep distance in Pr **20.21** mm

9.2 Closed loop vector

During this step the elevator performance is optimized to ensure the travel speed is correct and the required comfort level is achieved with the designed operating speeds also being achieved. In addition to the subjective test of the elevator performance, it is advisable to use the oscilloscope function included in the PC based scope software to achieve the best performance and to prevent any issues being overlooked. The oscilloscope will allow all associated drives parameters to be monitored. For more information see section 11.2 *CTScope* on page 194.

9.2.1 Adjustment of the control

With recommended gain values only a few adjustments will be necessary to achieve good performance. The type of encoder feedback device used will have an effect on the maximum value of speed loop gains and performance achieved.

A low-resolution feedback device, e.g. quadrature AB 1024ppr encoder will provide reduced speed loop gains and performance compared to a high-resolution feedback device, e.g SinCos encoder, which will allow much higher speed loop gains and performance.

Optimization - closed loop, servo	
Optimize start	
If the car lurches at start	Increase brake release delay **F37**, Pr **19.25** to 2500 ms
If the car lurches or rotates during brake release	Activate separate speed loop gains Pr **18.48** = 1
Adjustment of the speed loop Kp gain	Kp gain start **F43**, Pr **18.27** adjust to 2 x **F45**, Pr **18.25** (Harder)
	Increase **F43**, Pr **18.27** in steps of 0.01 until noisy or unstable
	Run gain is typically 50...60 % of start gain
Adjustment of speed loop Ki gain	Ki gain start **F44**, Pr **18.28** adjust to 2 x **F46**, Pr **18.26** (Stiffer)
	Increase **F44**, Pr **18.28** to 20...50 % of 100 x **F43**, Pr **18.27**
	Run gain is typically 50...60 % of start gain
AND / OR	
Position controller for start	Enable Kp position controller gain **F47**, Pr **19.20** = 3 to 30
	Enable Kd position controller gain Pr **0.20**, Pr **19.12** = 10 to 100
If the jerk is to high at the start of ramp profile	Reduce start jerk **F34**, Pr **19.14** up to 300 mm/s^3 (Softer)
AND / OR	
Start optimizer	Activate start optimizer by setting the time in **F38**, Pr **19.28** > 0
	Set the speed for start optimizer Pr **18.18** e.g. 5 to 15 mm/s
	Set time for start optimizer **F38**, Pr **19.28** e.g. 800...1000 ms
	Set jerk for start optimizer, Pr **19.17** e.g. 10 to 20 mm/s^3
Check elevator starts, if OK, reduce brake release delay as follows	
Adjustment of brake release delay	Reduce **F37**, Pr **19.25** to 300 ms as long as no lurch appears at start
Optimize constant speed	
Vibration of gearless motors	Adjust the Ki gain for the current loop in **F41** to a maximum of 10000
	Adjust the Kp gain of the current loop in **F42** to a maximum of 1000
If unstable	Reduce to 60% of the instability value
Regulation noise increases	Stop adjustment of gains and reduce slightly
If OI.AC- trip or instability occurs	Reduce the current loop Kp and Ki gain values by 60 %
Over / undershoot during acceleration / deceleration to or from contract speed	Reduce run jerk level **F35**, Pr **19.15** for example 500 mm/s^3 (Softer)
	Consider increased deceleration distances

AND / OR	
Enable inertia compensation	Pr **18.49** = 1
Check speed loop output Pr **3.04**	Adjust Pr **19.19**, so that Pr **3.04** is nearly constant
Optimize stop	
Lurch present at stop from creep speed	Reduce stop jerk **F36**, Pr **19.16** in the region of ...500 mm/s^3 (Softer)
	Reduce zero speed threshold Pr **3.05** = 2...4 rpm
Unwanted rotation during brake apply	Increase brake apply delay **F38**, Pr **18.24**
	Check motor contactor delay to Pr **20.20** > 0
Following error detection set up	
Check speed error at travel Pr **18.07**	Set max speed error Pr **19.24** = 10 x Pr **18.10** (200 mm/s)
Check distance error at travel Pr **18.06**	Set max distance error Pr **19.18** = 10 x Pr **18.06** (200 mm)
Save Setting: Pr x.00 = 1000 and RESET	

9.2.2 Adjustment of deceleration / positioning

Adjustment of deceleration positioning	
Check for correct speed selection Pr **18.10** reference value selected	If not correct, check connections from elevator controller to the control terminals of Unidrive SP for selection of speed, Pr **18.10**
Check stopping distance V1 Pr **19.05**	Change V1 (creep speed) **F24**, Pr **18.11** or stop jerk level **F36**, Pr **19.16**
Check reference deceleration distance Pr **0.14[3]**, Pr **19.08**	Select speed for deceleration distance via control input from elevator controller Read selected speed in **F50**, Pr **18.10** Read reference distance in Pr **19.08** Change Deceleration rate **F33**, Pr **2.21** Run jerk **F35**, Pr **19.15**
Start normal floor levelling runs	Check the measured creep distance in Pr **20.21** mm

NOTE

Induced noise on the encoder feedback can result in instability, reduced performance and limited speed loop gains. Also increased acoustic noise can also be generated dependant upon the motor design. The Unidrive SP has a speed feedback filter available in Pr **3.42** which can overcome low levels of induced noise. For higher levels of induced noise the encoder feedback cable connections and terminations must be checked.

10 SMARTCARD operation

10.1 Introduction

This is a standard feature that enables simple configuration of parameters in a variety of ways. The SMARTCARD can be used for:

- Parameter cloning between drives
- Saving whole drive parameter sets
- Saving ‘differences from default‘ parameter sets
- Automatically saving all user parameter changes for maintenance purposes
- Loading complete motor map parameters

Size 0

When inserting the SMARTCARD, always ensure that ST, SP0 arrow points upwards.

Size 1 to 6

The SMARTCARD is located at the top of the module under the drive display (if installed) on the left-hand side. Ensure the SMARTCARD is inserted with the SP1-9 arrow pointing upwards.

The drive only communicates with the SMARTCARD when commanded to read or write, meaning the card may be "hot swapped".

WARNING

Encoder phase angle (servo mode only)

With drive software version V01.08.00 onwards, the encoder phase angle in Pr **3.25** is cloned to the SMARTCARD when using any of the SMARTCARD transfer methods.

With drive software version V01.05.00 to V01.07.01, the encoder phase angle in Pr **3.25** is only cloned to the SMARTCARD when using either Pr **0.30** set to Prog (2) or Pr **xx.00** set to 3yyy.

This is useful when the SMARTCARD is used to back-up the parameter set of a drive but caution should be used if the SMARTCARD is used to transfer parameter sets between drives.

Unless the encoder phase angle of the servo motor connected to the destination drive is known to be the same as the servo motor connected to the source drive, an autotune should be performed or the encoder phase angle should be entered manually into Pr **3.25**. If the encoder phase angle is incorrect the drive may lose control of the motor resulting in an O.SPd or Enc10 trip when the drive is enabled.

With drive software version V01.04.00 and earlier, or when using software version V01.05.00 to V01.07.01 and Pr **xx.00** set to 4yyy is used, then the encoder phase angle in Pr **3.25** is not cloned to the SMARTCARD. Therefore, Pr **3.25** and Pr **21.20** in the destination would not be changed during a transfer of this data block from the SMARTCARD.

WARNING

Be aware of possible live terminals when inserting or removing the SMARTCARD.

Figure 10-1 Installing the SMARTCARD

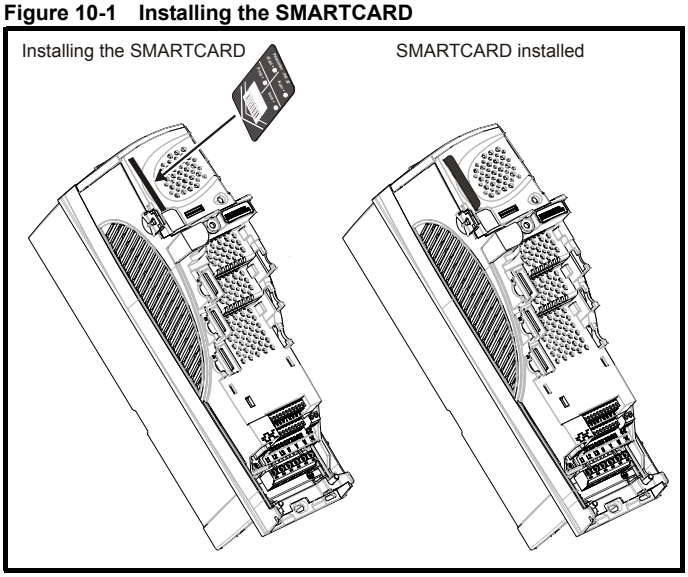

The SMARTCARD has 999 individual data block locations. Each individual location from 1 to 499 can be used to store data until the capacity of the SMARTCARD is used. With software V01.07.00 and later the drive can support SMARTCARDs with a capacity of between 4 kB and 512 kB. With software V01.06.02 and earlier the drive can support SMARTCARDs with a capacity of 4 kB.

The data block locations of the SMARTCARD are arranged to have the following usage:

Table 10-1 SMARTCARD data blocks

Data Block	Type	Example Use
1 to 499	Read / Write	Application set ups
500 to 999	Read Only	Macros

‘Differences from default‘ parameter sets will be much smaller than whole parameter sets and thus take up a lot less memory as most applications only require a few parameters to be changed from the default setting.

The whole card may be protected from writing or erasing by setting the read-only flag as detailed *9888 / 9777 - Setting and clearing the SMARTCARD read only flag.*

Data transfer to or from the SMARTCARD is indicated by one the following:

- SM-Keypad/SP0-Keypad: The decimal point after the fourth digit in the upper display will flash.
- SM-Keypad Plus: The symbol 'CC' will appear in the lower left hand corner of the display

The card should not be removed during data transfer, as the drive will produce a trip. If this occurs then either the transfer should be reattempted or in the case of a card to drive transfer, default parameters should be loaded.

NOTE

It is not possible to store Menu 20 parameters onto a SMARTCARD and transfer them to the drive with software versions up to V1.13, unless the following sequence is carried out.

The issue with Menu 20 parameter downloads from the SMARTCARD to the drive when using the Elevator Solution Software is due to parameters being set to default values when reading SMARTCARD blocks with differences to the default (4xxx).

The following procedure is required in order to load the correct Menu 20 parameters from the SMARTCARD to the drive (V1.13 or earlier).

1. Copy the parameter set from the first drive Pr **x.00** = 400x + Reset
2. Transfer to the second drive
   - Pr **17.13** = 0
     Stops Elevator Solution Software running during transfer
   - Pr **17.19** = ON
     Reset SM-Applications Lite (changes ON to OFF)
   - Pr **x.00** = 600x + Reset
     Program parameters from SMARTCARD to drive with Pr **x.00** = 600x
   - Pr **17.19** = ON
     Reset SM-Applications Lite (changes On to OFF)

This issue has been corrected with Elevator Solution Software version V1.14.

10.2 Transferring data

Data transfer, erasing and protecting the information is performed by entering a code in Pr **xx.00** and then resetting the drive as shown in Table 10-2.

Table 10-2 SMARTCARD codes

Code	Action
2001	Transfer drive parameters as difference from defaults to a bootable SMARTCARD block in data block number 001
3yyy	Transfer drive parameters to a SMARTCARD block number yyy
4yyy	Transfer drive data as difference from defaults to SMARTCARD block number yyy
5yyy	Transfer drive Onboard PLC program to SMARTCARD block number yyy
6yyy	Transfer SMARTCARD data block yyy to the drive
7yyy	Erase SMARTCARD data block yyy
8yyy	Compare drive parameters with block yyy
9555	Clear SMARTCARD warning suppression flag (V01.07.00 and later)
9666	Set SMARTCARD warning suppression flag (V01.07.00 and later)
9777	Clear SMARTCARD read-only flag
9888	Set SMARTCARD read-only flag
9999	Erase SMARTCARD

Where yyy indicates the block number 001 to 999. See Table 10-1 for restrictions on block numbers.

NOTE

If the read only flag is set then only codes 6yyy or 9777 are effective.

10.2.1 Writing to the SMARTCARD

3yyy - Transfer data to the SMARTCARD

The data block contains the complete parameter data from the drive, i.e. all user save (US) parameters except parameters with the NC coding bit set. Power-down save (PS) parameters are not transferred to the SMARTCARD.

With software V01.06.02 and earlier, a save must have been performed on the drive to transfer the parameters from the drive RAM to the EEPROM before the transfer to the SMARTCARD is carried out.

4yyy - Write default differences to a SMARTCARD

The data block only contains the parameter differences from the last time default settings were loaded.

Six bytes are required for each parameter difference. The data density is not as high as when using the 3yyy transfer method as described in the previous section, but in most cases the number of differences from default is small and the data blocks are therefore smaller. This method can be used for creating drive macros. Power-down save (PS) parameters are not transferred to the SMARTCARD.

The data block format is different depending on the software version. The data block holds the following parameters:

Software V01.06.02 and earlier

All user save (US) parameters, except those with the NC (Not Cloned) coding bit set or those that do not have a default value, can be transferred to the SMARTCARD.

Software V01.07.xx

All user save (US) parameters, except those with the NC (Not Cloned) coding bit set or those that do not have a default value, can be transferred to the SMARTCARD. In addition to these parameters all menu 20 parameters (except Pr **20.00**), can be transferred to the SMARTCARD even though they are not user save parameters and have the NC coding bit set.

Software V01.08.00 onwards

All user save (US) parameters including those that do not have a default value (i.e. Pr **3.25** or Pr **21.20** *Encoder phase angle*), but not including those with the NC (Not Cloned) coding bit set can be transferred to the SMARTCARD. In addition to these parameters all menu 20 parameters (except Pr **20.00**), can be transferred to the SMARTCARD even though they are not user save parameters and have the NC coding bit set.

It is possible to transfer parameters between drive with each of the different formats, however, the data block compare function does not work with data produced by different formats.

Writing a parameter set to the SMARTCARD (Pr 11.42 = Prog (2))

Setting Pr **11.42** to Prog (2) and resetting the drive will save the parameters to the SMARTCARD, i.e. this is equivalent to writing 3001 to Pr **xx.00**. All SMARTCARD trips apply except 'C.Chg'. If the data block already exists it is automatically overwritten. When the action is complete this parameter is automatically reset to nonE (0).

10.2.2 Reading from the SMARTCARD

6yyy - Read default differences from a SMARTCARD

When the data is transferred back to a drive, using 6yyy in Pr **xx.00**, it is transferred to the drive RAM and the drive EEPROM. A parameter save is not required to retain the data after power-down. Set up data for any Solutions Modules installed are stored on the card and are transferred to the destination drive. If the Solutions Modules are different between the source and destination drive, the menus for the slots where the Solutions Module categories are different are not updated from the card and will contain their default values after the cloning action. The drive will produce a 'C.Optn' trip if the Solutions Modules installed to the source and destination drive are different or are in different slots. If the data is being transferred to a drive of a different voltage or current rating a 'C.rtg' trip will occur.

The following drive rating dependant parameters (RA coding bit set) will not be transferred to the destination drive by a SMARTCARD when the rating of the destination drive is different from the source drive and the file is a parameter file (i.e. created using the 3yyy transfer method). However, with software V01.09.00 and later drive rating dependent parameters will be transferred if only the current rating is different and the file is a differences from default type file (i.e. created using the 4yyy transfer method). If drive rating dependant parameters are not transferred to the destination drive they will contain their default values.

Pr **2.08** *Standard ramp voltage*
Pr **4.05** to Pr **4.07** and Pr **21.27** to Pr **21.29** *Current limits*
Pr **4.24**, *User current maximum scaling*
Pr **5.07**, Pr **21.07** *Motor rated current*
Pr **5.09**, Pr **21.09** *Motor rated voltage*
Pr **5.10**, Pr **21.10** *Rated power factor*
Pr **5.17**, Pr **21.12** *Stator resistance*
Pr **5.18** *Switching frequency*
Pr **5.23**, Pr **21.13** *Voltage offset*
Pr **5.24**, Pr **21.14** *Transient inductance*
Pr **5.25**, Pr **21.24** *Stator inductance*
Pr **6.06** *DC injection braking current*
Pr **6.48** *Mains loss ride through detection level*

Reading a parameter set from the SMARTCARD (Pr 11.42 =rEAd (1))

Setting Pr **11.42** to rEAd (1) and resetting the drive will transfer the parameters from the card into the drive parameter set and the drive EEPROM, i.e. this is equivalent to writing 6001 to Pr **xx.00**. All SMARTCARD trips apply. Once the parameters are successfully copied this parameter is automatically reset to nonE (0). Parameters are saved to the drive EEPROM after this action is complete.

NOTE

This operation is only performed if data block 1 on the card is a full parameter set (3yyy transfer) and not a default difference file (4yyy transfer). If block 1 does not exist a 'C.dAt' trip occurs.

10.2.3 Auto saving parameter changes (Pr 11.42 = Auto (3))

This setting causes the drive to automatically save any changes made to menu 0 parameters on the drive to the SMARTCARD. The latest menu 0 parameter set in the drive is therefore always backed up on the SMARTCARD. Changing Pr **11.42** to Auto (3) and resetting the drive will immediately save the complete parameter set from the drive to the card, i.e. all user save (US) parameters except parameters with the NC coding bit set. Once the whole parameter set is stored only the individual modified menu 0 parameter setting is updated.

Advanced parameter changes are only saved to the card when Pr **xx.00** is set to a 1000 and the drive reset.

All SMARTCARD trips apply, except ‘C.Chg’. If the data block already contains information it is automatically overwritten.

If the card is removed when Pr **11.42** is set to 3 Pr **11.42** is then automatically set to nonE (0).

When a new SMARTCARD is installed Pr **11.42** must be set back to Auto (3) by the user and the drive reset so the complete parameter set is rewritten to the new SMARTCARD if auto mode is still required.

When Pr **11.42** is set to Auto (3) and the parameters in the drive are saved, the SMARTCARD is also updated, therefore the SMARTCARD becomes a copy of the drives stored configuration.

At power-up, if Pr **11.42** is set to Auto (3), the drive will save the complete parameter set to the SMARTCARD. The drive will display ‘cArd’ during this operation. This is done to ensure that if a user puts a new SMARTCARD in during power down the new SMARTCARD will have the correct data.

NOTE

When Pr **11.42** is set to Auto (3) the setting of Pr **11.42** itself is saved to the drive EEPROM but NOT to the SMARTCARD.

10.2.4 Booting up from the SMARTCARD on every power-up (Pr 11.42 = boot (4))

When Pr **11.42** is set to boot (4) the drive operates the same as Auto mode except when the drive is powered-up. The parameters on the SMARTCARD will be automatically transferred to the drive at power-up if the following are true:

- A card is inserted in the drive
- Parameter data block 1 exists on the card
- The data in block 1 is type 1 to 5 (as defined in Pr **11.38**)
- Pr **11.42** on the card set to boot (4)

The drive will display 'boot' during this operation. If the drive mode is different from that on the card, the drive gives a 'C.Typ'. trip and the data is not transferred.

If 'boot' mode is stored on the copying SMARTCARD this makes the copying SMARTCARD the master device. This provides a very fast and efficient way of re-programming a number of drives.

If data block 1 contains a bootable parameter set and data block 2 contains an Onboard PLC program (type 17 as defined in Pr **11.38**), then if the drive software version is V01.07.00 and later, the onboard PLC program will be transferred to the drive at power-up along with the parameter set in data block 1.

‘Boot’ mode is saved to the card, but when the card is read, the value of Pr **11.42** is not transferred to the drive.

NOTE

‘Boot’ mode is saved to the card, but when the card is read the value of Pr **11.42** is not transferred to the drive.

10.2.5 Booting up from the SMARTCARD on every power-up (Pr xx.00 = 2001), software V01.08.00 and later

It is possible to create a difference from default bootable file by setting Pr **xx.00** to 2001 and resetting the drive. This type of file causes the drive to behave in the same way at power-up as a file created with boot mode set up with Pr **11.42**. The difference from the default file is that it has the added advantage of including menu 20 parameters.

Setting Pr **xx.00** to 2001 will overwrite data block 1 on the card if it already exists.

If a data block 2 exists and contains an Onboard PLC program (type 17 as defined in Pr **11.38**), this will also be loaded after the parameters have been transferred.

A bootable difference from default file can only be created in one operation and parameters cannot be added, as they are saved via menu 0.

10.2.6 8yyy - Comparing the drive full parameter set with the SMARTCARD values

Setting 8yyy in Pr **xx.00**, will compare the SMARTCARD file with the data in the drive. If the compare is successful Pr **xx.00** is simply set to 0. If the compare fails a ‘C.cpr’ trip is initiated.

10.2.7 7yyy / 9999 - Erasing data from the SMARTCARD

Data can be erased from the SMARTCARD either one block at a time or blocks all in one go.

- Setting 7yyy in Pr **xx.00** will erase SMARTCARD data block yyy.
- Setting 9999 in Pr **xx.00** will erase SMARTCARD data blocks.

10.2.8 9666 / 9555 - Setting and clearing the SMARTCARD warning suppression flag (V01.07.00 and later)

If the Solutions Modules installed to the source and destination drive are different, or are in different slots, the drive will produce a 'C.Optn' trip. If the data is being transferred to a drive of a different voltage or current rating a 'C.rtg' trip will occur. It is possible to suppress these trips by setting the warning suppression flag. If this flag is set the drive will not trip if the Solutions Module(s) or drive ratings are different between the source and destination drives. The Solutions Module or rating dependent parameters will not be transferred.

- Setting 9666 in Pr **xx.00** will set the warning suppression flag
- Setting 9555 in Pr **xx.00** will clear the warning suppression flag

10.2.9 9888 / 9777 - Setting and clearing the SMARTCARD read only flag

The SMARTCARD may be protected from writing or erasing by setting the read only flag. If an attempt is made to write or erase a data block when the read only flag is set, a 'C.rdo' trip is initiated. When the read only flag is set only codes 6yyy or 9777 are effective.

- Setting 9888 in Pr **xx.00** will set the read only flag
- Setting 9777 in Pr **xx.00** will clear the read only flag.

10.3 Data block header information

Each data block stored on a SMARTCARD has header information detailing the following:

- A number which identifies the block (Pr **11.37**)
- The type of data stored in the block (Pr **11.38**)
- The drive mode if the data is parameter data (Pr **11.38**)
- The version number (Pr **11.39**)
- The checksum (Pr **11.40**)
- The read-only flag
- The warning suppression flag (V01.07.00 and later)

The header information for each data block which has been used can be viewed in Pr **11.38** to Pr **11.40** by increasing or decreasing the data block number set in Pr **11.37**.

Software V01.07.00 and later

If Pr **11.37** is set to 1000 the checksum parameter (Pr **11.40**) shows the number of 16 byte pages left on the card.

If Pr **11.37** is set to 1001 the checksum parameter (Pr **11.40**) shows the total capacity of the card in 16 byte pages. Therefore, for a 4kB card this parameter would show 254.

If Pr **11.37** is set to 1002 the checksum parameter (Pr **11.40**) shows the state of the read-only (bit 0) and warning suppression flags (bit 1). Software version V01.11.00 and later: If Pr **11.37** is set to 1003, the checksum parameter (Pr **11.40**) shows the product identifier (255 = Unidrive SP, 1 = Commander GP20, 2 = Digitax ST, 3 = Affinity, 4 = Mentor MP).

If there is no data on the card Pr **11.37** can only have values of 0 or 1,000 to 1,003.

Software V01.06.02 and earlier

If Pr **11.37** is set to 1000 the checksum parameter (Pr **11.40**) shows the number of bytes left on the card. If there is no data on the card Pr **11.37** can only have values of 0 or 1,000.

The version number is intended to be used when data blocks are used as drive macros. If a version number is to be stored with a data block, Pr **11.39** should be set to the required version number before the data is transferred. Each time Pr **11.37** is changed by the user the drive puts the version number of the currently viewed data block in Pr **11.39**.

If the destination drive has a different drive mode to the parameters on the card, the drive mode will be changed by the action of transferring parameters from the card to the drive.

The actions of erasing a card, erasing a file, changing a menu 0 parameter, or inserting a new card will effectively set Pr **11.37** to 0 or the lowest file number in the card.

10.4 SMARTCARD parameters

Table 10-3 Key to parameter table coding

RW	Read / Write	RO	Read only	Uni	Unipolar
Bi	Bi-polar	Bit	Bit parameter	Txt	Text string
FI	Filtered	DE	Destination	NC	Not cloned
RA	Rating dependent	PT	Protected	US	User save
PS	Power down save				

11.36 {0.29}	**SMARTCARD parameter data previously loaded**								
RO	Uni					NC	PT	US	
⇕	0 to 999				⇨	0			

This parameter shows the number of the data block last transferred from a SMARTCARD to the drive.

11.37	**SMARTCARD data number**								
RW	Uni					NC			
⇕	0 to 1,003				⇨	0			

This parameter should have the data block number entered for which the user would like information displayed in Pr **11.38**, Pr **11.39** and Pr **11.40**.

11.38	**SMARTCARD data type/mode**								
RO	Txt					NC	PT		
⇕	0 to 18				⇨				

Gives the type/mode of the data block selected with Pr **11.37**:

Pr 11.38	String	Type/mode	Data stored
0	FrEE	Value when Pr **11.37** = 0, 1,000, 1,001 or 1,002	
1		Reserved	
2	3OpEn.LP	Open-loop mode parameters	Data from EEPROM
3	3CL.VECt	Closed-loop vector mode parameters	
4	3SErVO	Servo mode parameters	
5	3rEgEn	Regen mode parameters	
6 to 8	3Un	Unused	
9		Reserved	
10	4OpEn.LP	Open-loop mode parameters	Defaults last loaded and differences
11	4CL.VECt	Closed-loop vector mode parameters	
12	4SErVO	Servo mode parameters	
13	4rEgEn	Regen mode parameters	
14 to 16	4Un	Unused	
17	LAddEr	Onboard PLC program	
18	Option	A Solutions Module file	

11.39	**SMARTCARD data version**								
RW	Uni					NC			
⇕	0 to 9,999				⇨	0			

Gives the version number of the data block selected in Pr **11.37**.

11.40	**SMARTCARD data checksum**								
R0	Uni					NC	PT		
⇕	0 to 65,335				⇨				

Gives the checksum of the data block selected in Pr **11.37**.

11.42 {0.30}	**Parameter copying**								
RW	Txt					NC		US*	
⇕	0 to 4				⇨	nonE (())			

NOTE

If Pr **11.42** is equal to 1 or 2, this value is not transferred to the drive or saved to the EEPROM. If Pr **11.42** is set to a 3 or 4 the value is transferred.

nonE (0) = Inactive
rEAd (1) = Read parameter set from the SMARTCARD
Prog (2) = Programming a parameter set to the SMARTCARD
Auto (3) = Auto save
boot (4) = Boot mode

10.5 SMARTCARD trips

After an attempt to read, write or erase data to or from a SMARTCARD, a trip may occur if there has been a problem with the command as detailed in Table 10-4.

Table 10-4 Trip conditions

Trip	Diagnosis
C.Acc	**SMARTCARD trip: SMARTCARD Read / Write fail**
185	Check SMARTCARD is installed / located correctly Replace SMARTCARD
C.boot	**SMARTCARD trip: The menu 0 parameter modification cannot be saved to the SMARTCARD because the necessary file has not been created on the SMARTCARD**
177	A write to a menu 0 parameter has been initiated via the keypad with Pr **11.42** set to auto(3) or boot(4), but the necessary file on the SMARTCARD has not been created Ensure that Pr **11.42** is correctly set and reset the drive to create the necessary file on the SMARTCARD Re-attempt the parameter write to the menu 0 parameter
C.bUSY	**SMARTCARD trip: SMARTCARD can not perform the required function as it is being accessed by a Solutions Module**
178	Wait for the Solutions Module to finish accessing the SMARTCARD and then re-attempt the required function
C.Chg	**SMARTCARD trip: Data location already contains data**
179	Erase data in data location Write data to an alternative data location
C.Cpr	**SMARTCARD trip: The values stored in the drive and the values in the data block on the SMARTCARD are different**
188	Press the red reset button
C.dat	**SMARTCARD trip: Data location specified does not contain any data**
183	Ensure data block number is correct
C.Err	**SMARTCARD trip: SMARTCARD data is corrupted**
182	Ensure the card is located correctly Erase data and retry Replace SMARTCARD
C.Full	**SMARTCARD trip: SMARTCARD full**
184	Delete a data block or use a different SMARTCARD
C.Optn	**SMARTCARD trip: Solutions Modules installed are different between source drive and destination drive**
180	Ensure correct Solutions Modules are installed Ensure Solutions Modules are in the same Solutions Module slot Press the red reset button
C.Prod	**SMARTCARD trip: The data blocks on the SMARTCARD are not compatible with this product**
175	Erase all data on the SMARTCARD by setting Pr **xx.00** to 9999 and pressing the red reset button Replace SMARTCARD

Trip	Diagnosis
C.RdO	**SMARTCARD trip: SMARTCARD has the Read only bit set**
181	Enter 9777 in Pr **xx.00** to allow SMARTCARD Read / Write access Ensure card is not writing to data locations 500 to 999
C.rtg	**SMARTCARD trip: The voltage and/or current rating of the source and destination drives are different**
186	Drive rating dependent parameters (parameters with the RA coding) are likely to have different values and ranges with drives of different voltage and current ratings. Parameters with this attribute will not be transferred to the destination drive by SMARTCARDs when the rating of the destination drive is different from the source drive and the file is a parameter file. However, with software V01.09.00 and later drive rating dependent parameters will be transferred if only the current rating is different and the file is a differences from default type file. Press the red reset button Drive rating parameters are:

Parameter	Function
2.08	Standard ramp voltage
4.05/6/7, **21.27/8/9**	Current limits
4.24	User current maximum scaling
5.07, **21.07**	Motor rated current
5.09, **21.09**	Motor rated voltage
5.10, **21.10**	Rated power factor
5.17, **21.12**	Stator resistance
5.18	Switching frequency
5.23, **21.13**	Voltage offset
5.24, **21.14**	Transient inductance
5.25, **21.24**	Stator inductance
6.06	DC injection braking current
6.48	Mains loss ride through detection level

The above parameters will be set to their default values.

C.Typ	**SMARTCARD trip: SMARTCARD parameter set not compatible with drive**
187	Press the red reset button Ensure destination drive type is the same as the source parameter file drive type

Table 10-5 SMARTCARD status indications

Lower display	Description
boot	A parameter set is being transferred from the SMARTCARD to the drive during power-up. For further information, please refer to section 10.2.4
cArd	The drive is writing a parameter set to the SMARTCARD during power-up For further information, please refer to section 10.2.3 *Auto saving parameter changes (Pr 11.42 = Auto (3))*

11 Commissioning / start up software tools

When commissioning / starting up the elevator, there are number of PC tools available which permit the set-up, monitoring and optimization of the Unidrive SP:

- CTSoft
- CTScope
- Lift-SP

All of these PC programs assist with the commissioning / start up of the Unidrive SP Elevator Solution Software. Standard parameter files that may have been available from previous applications can be downloaded, or the final parameter files can be uploaded for future applications. Using CTScope (see CTScope below), waveforms can be taken during commissioning / start up and saved for future reference.

11.1 CTSoft

CTSoft allows a project for an application to be set-up and from this all parameters in the drive can be programmed with either a pre-defined parameter file or configured and saved by the user. The project can be generated manually or through use of the available set-up wizard.

Figure 11-1 CTSoft main screen

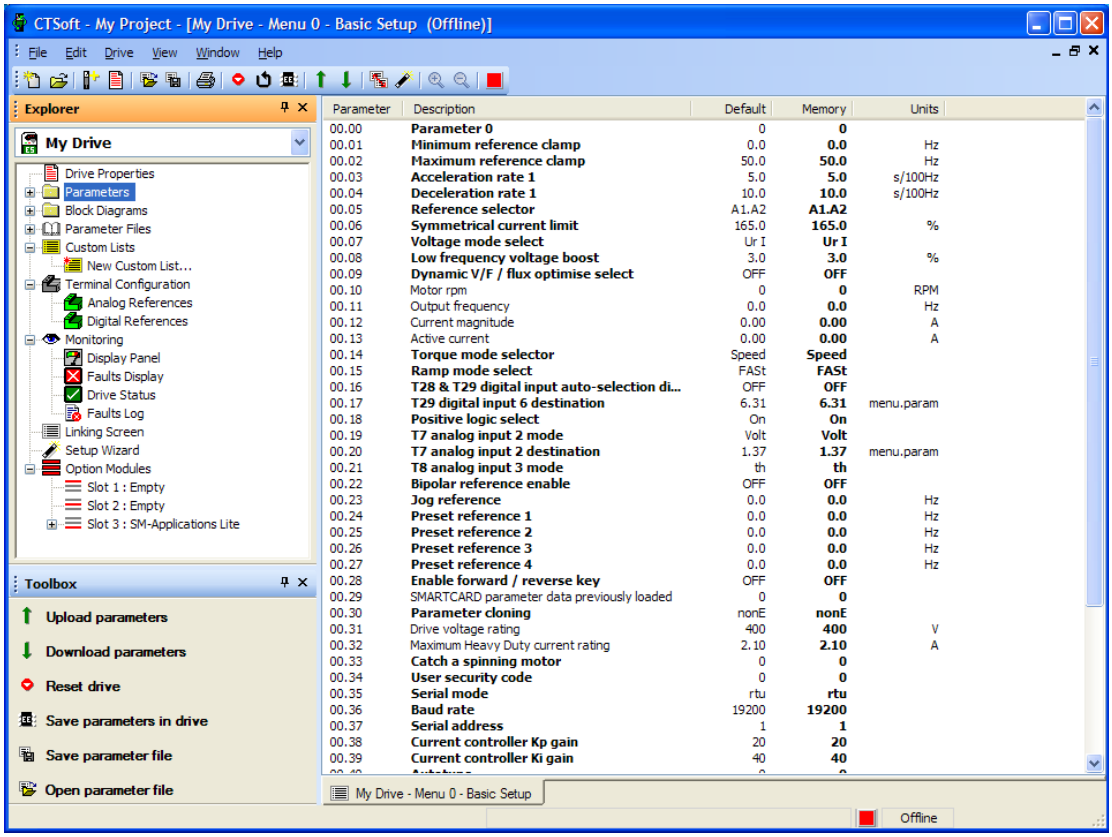

Additional features also available in CTSoft are

- Drive properties and summary screen
- Detailed parameter differences from default
- Detailed parameter descriptions
- Block diagrams
- Terminal configurations
- Monitoring features
- Solutions Modules support and configuration
- Help files

11.2 CTScope

CTScope is a PC based software oscilloscope that includes all features normally associated with an oscilloscope. The oscilloscope features include:

- 4 channels
- Adjustable time-base and scaling
- Trigger
- Cursors
- Zoom feature
- Save and recall waveforms
- Sampling rate down to 1 ms
- Connection via Unidrive SP RJ-45 or via CT-Net
- Single or multiple drives can be monitored simultaneously on CT-Net

Figure 11-2 CT Scope main screen

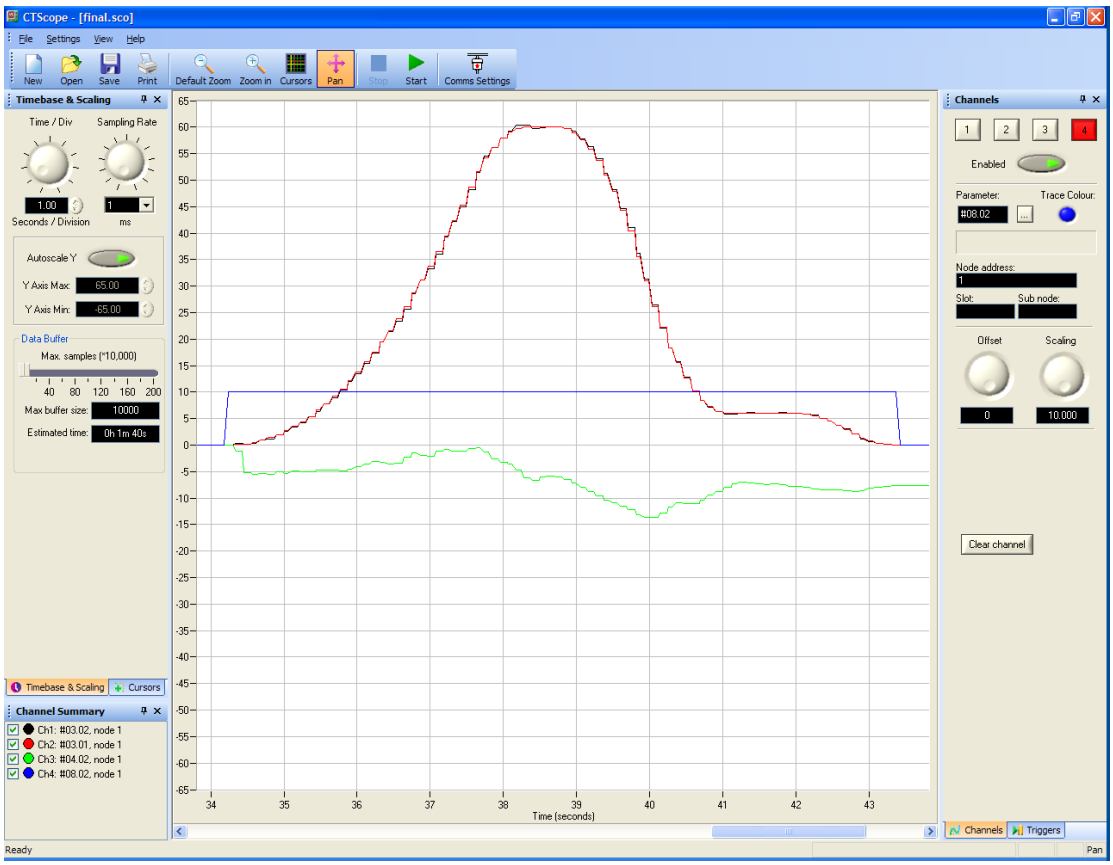

11.3 Lift-SP

Lift-SP is also a PC based software program that includes features which allow the Unidrive SP to be set-up (parameter download) and which also has an oscilloscope feature included.

Figure 11-3 Elevator-SP

There are however additional features which are specific to the elevator set-up included with this PC based software program. For example the following screen provides all the required set-up parameters for the creep-to-floor positioning.

Figure 11-4 Creep-to-floor profile and parameters

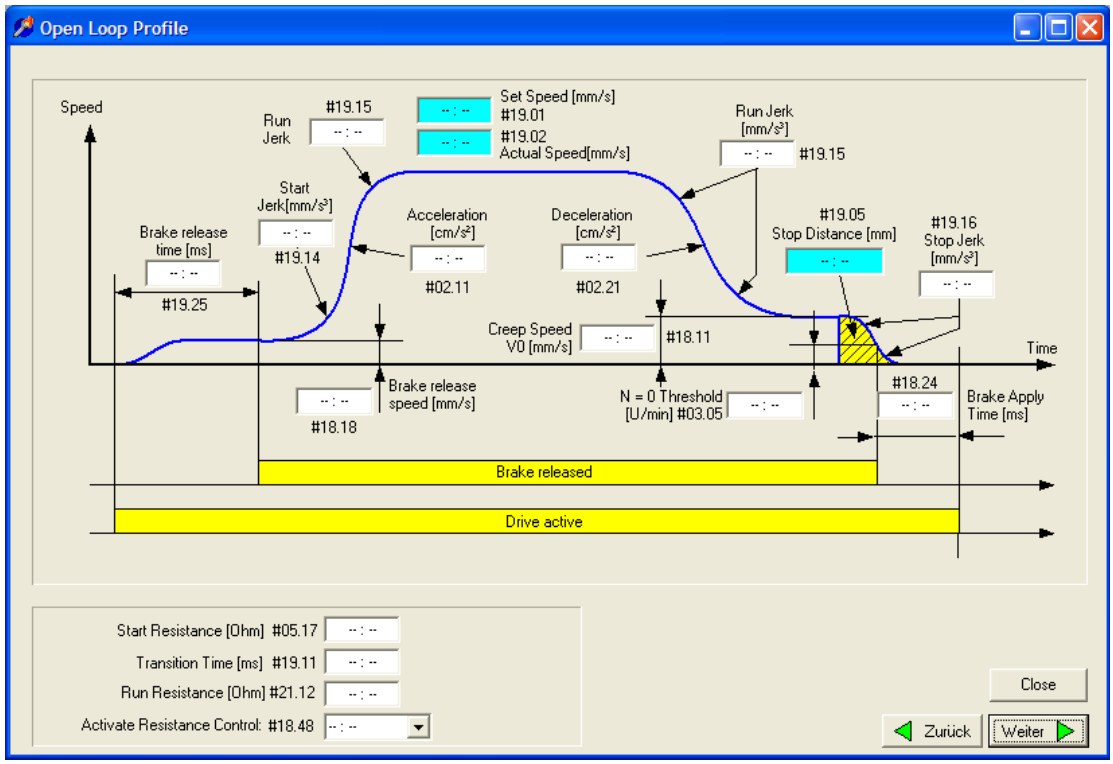

Other custom screens available for set-up include

- Elevator installation parameters
- Speed set points
- Creep-to-floor, direct-to-floor
- Floor sensor control
- Inertia and load compensation
- Error detection

Figure 11-5 LiftSP Oscilloscope

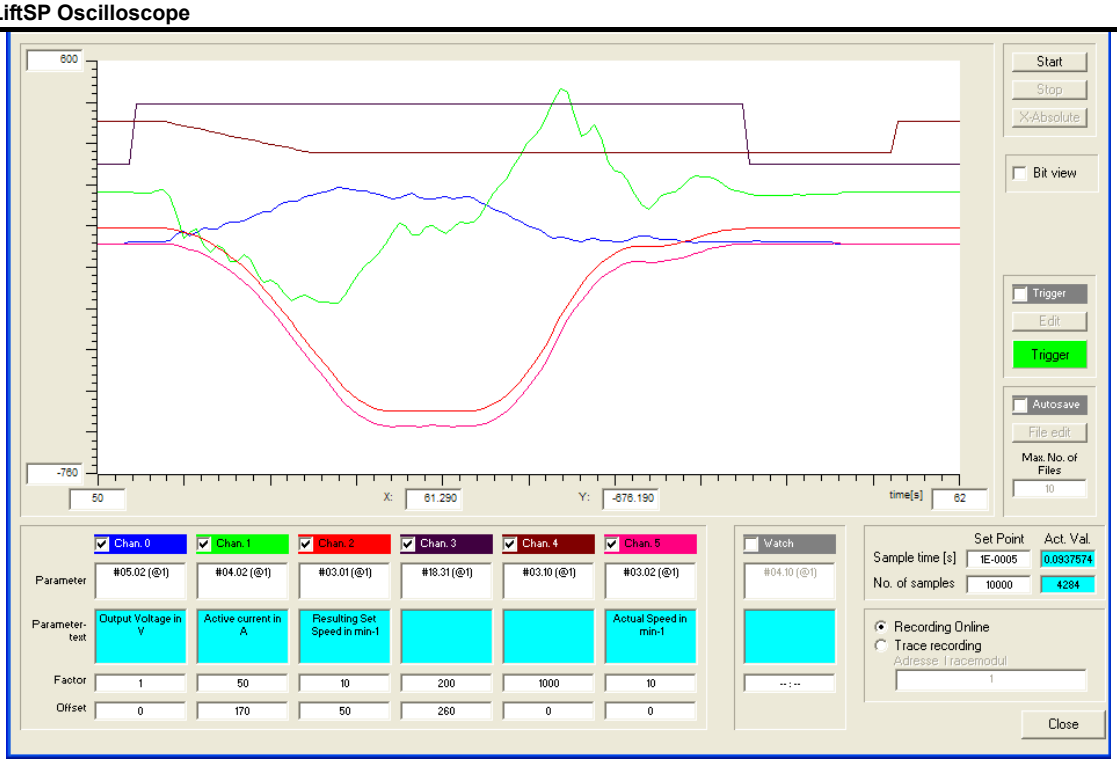

12 Diagnostics

The integral display located on the drive, provides information about the current drive status, which are grouped under the following three headings:

- Trip indications
- Alarm indications
- Status indications

WARNING Users must not attempt to repair a drive if it is faulty, nor carry out fault diagnosis other than through the use of the diagnostic features described in this chapter. If a drive is faulty, it must be returned to an authorized Control Techniques distributor for repair.

12.1 Trip indications

If the drive trips, the output of the drive is disabled so that the drive stops controlling the motor. The lower display indicates that a trip has occurred and the upper display shows the trip. If this is a multi-module drive and a power module has indicated a trip, then the upper display will alternate between the trip string and the module number.

Figure 12-1 Keypad status modes

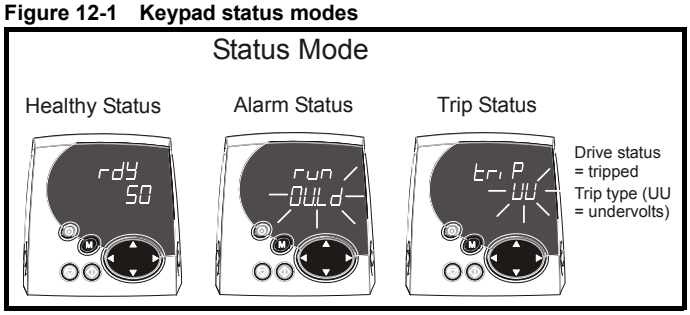

Figure 12-2 Location of the status LED

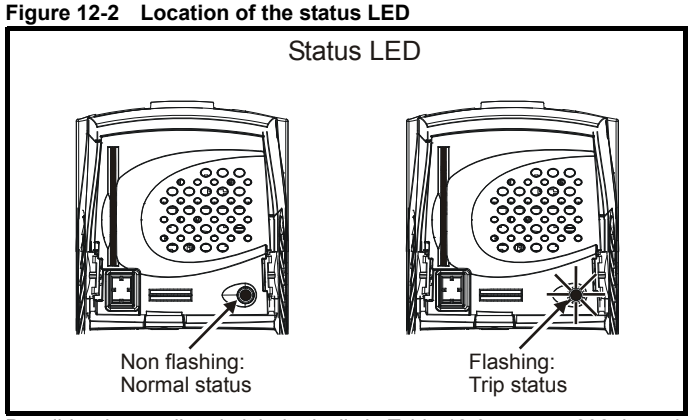

Possible trips are listed alphabetically in Table 12.6 on page 202, based on the trip indication shown on the drive display. If a display is not used, the drive LED Status indicator will flash if the drive has tripped. The trips indication can be read in Pr **10.20**. Trip numbers are listed in numerical order in Table 12.6 on page 202.

Example:

1. Trip code 3 is read from Pr **10.20** via serial communications.
2. Checking Table shows Trip 3 is an OI.AC trip.

Figure 12-3

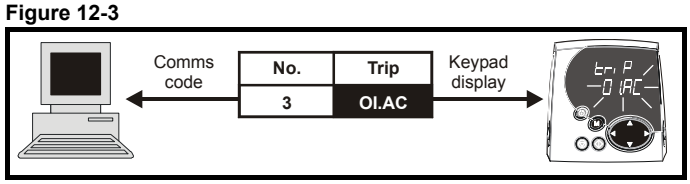

3. Look up OI.AC in Table 12.6 on page 202
4. Perform checks detailed under Diagnosis.

Table 12-1 Example trip description

Trip	Diagnosis
OI.AC	**Instantaneous output over current detected: peak output current greater than 222%**
3	Acceleration / deceleration rate is too short. If seen during autotune reduce voltage boost Pr **5.15** Check for short circuit on output cabling Check integrity of motor insulation Check feedback device wiring Check feedback device mechanical coupling Check feedback signals are free from noise Is motor cable length within limits for that frame size? Reduce the values in speed loop gain parameters – Pr **3.10**, Pr **3.11** and Pr **3.12** (closed loop vector and servo modes only) Has offset measurement test been completed? (servo mode only) Reduce the values in current loop gain parameters - Pr **4.13** and Pr **4.14** (closed loop vector and servo modes only)

12.2 Elevator specific diagnostics

This section covers specific diagnostics related to the Elevator Solution Software (SM-Applications, SM-Applications Lite) which is required for the Unidrive SP Elevator Solution.

NOTE

During a drive trip which is stored in menu 10, the associated run time is now also stored in Pr **10.41** to Pr **10.51** through the automatic set-up in the lift software from V01.22.00 (Pr **6.28**, Pr **6.49** = 1).

NOTE

Solution Module option error codes, SLX.er are now captured and stored in Pr **70.66** (trip code) and Pr **70.67** (Elevator Solution Software code line error).

Table 12-2 Elevator Solution Software trip codes

Trip	Description	Diagnosis
t051	ENP data incorrect motor type	Generated where the ENP electronic nameplate is not programmed for Servo operation mode **F01** (Pr **11.31**).
t052	Incorrect encoder type	Generated where the encoder used is of the incorrect type **F03** (Pr **3.38**).
t054	Fault present during ENP read	Pr **71.58** = **1** No fault identified**.** Pr **71.58 = -3** CRC error, encoder defective. Pr **71.58 = -4** Parameter value out of range. The data value read from the encoder cannot be written to the drive parameter. Inverter size too small. Pr **71.58 = -5** Command is not supported by the encoder. Pr **71.58 = -6** The encoder has signalled an error**.** Pr **71.58 = -7** Message received from the encoder has a CRC/checksum error**.** Pr **71.58 = -8** Timeout, encoder does not reply. Pr **71.58 = -9** Invalid slot or no SM-Universal Encoder Plus installed. Slot must be 0 to 3 (inclusive). Pr **71.58 = -10** No encoder connected.
t055	Forbidden movement	Will be caused, if the motor is insufficient fixed and has turned by 1/16th motor turns. Please check mechanical brakes.
t056	Insufficient encoder resolution	Will be caused if the encoder resolution is not sufficient to detect the phase angle. Please try again or check encoder resolution and setting.
t061	Drive rating ND	Trip t061 generated where Pr **5.07** >Pr **11.32** and Pr **5.07** >Pr **21.07**. Disable by setting Pr **21.07** >Pr **11.32** and Pr **5.07** <Pr **21.07**.
t062	FAST start monitoring	Trip generated if movement exceeds the distance in Pr **70.59** which > 0.
t070	Speed error	Excessive speed error detected.
t071	Distance error	Excessive distance error detected.
t072	Current decay after stop	Checks inverter output current decay following stop.
t073	Protection against freeze	Ambient temperature to low for operation < Pr **70.81**.
t074	FAST disable control error	Fast disable input operation error following speed selection.
t075	SAFE TORQUE OFF (STO) control error	STO input operation error following speed selection.
t077	Motor phase loss	Internal monitoring has detected loss of motor phase through Pr **19.43**.
t078	Motor contactor monitoring	Monitors correct operation of the output motor contactors.
t079	Software version check	Checks the software version of the drive and Elevator Solution Software when selecting FAST disable.
t080	Inverted encoder error	Detected inverted orientation of the encoder from the following error detection.
t083	Brake contact monitoring	Monitors correct operation of the brake contacts.

NOTE

Trips t074, t075 and t078 can be disabled by setting Pr **70.65** = 1001001. This could be used during commissioning.

12.3 Diagnostic travel interrupt Pr 20.39

To diagnose the sequence of a travel, a diagnostic travel interrupt parameter is available with software versions > V01.21.00, Pr **20.39** as detailed below. For software version < V01.21.00 refer to Pr **20.35**.

Table 12-3 Pr 20.39 value descriptions

Pr 20.39	Description
= 0	No external travel interrupt
= 2	Travel interrupt during motor magnetization
= 3	Travel interrupt during brake opening
= 4	Travel interrupt during normal travel
= 5	Travel interrupt during brake apply
= 6	Travel interrupt during motor demagnetization

12.4 Control state Pr 20.11

This parameter indicates the status of the Elevator Solution Software and can be used to identify the control state.

Table 12-4 Pr 20.11 control state descriptions

Pr 20.11	Control state description
= 0	Idle, no call pending, waiting for start signal from speed selection Pr **18.10** > 1810 and if Pr **19.26** = 1 additional 1 direction signal, will
= 1	De-bounce motor contactors for 100 ms and enable current to flow when transition to Pr **20.11** = 2
= 2	Waiting for motor magnetised, if magnetised allow brake to be released and transit to Pr **20.11**= 3
= 3	Waiting for brake release time (Pr **18.24**) and load measured (Pr **20.08**) after brake release signal active. If both completed allow ramp
= 4	Run mode, waiting for brake control state (start = 0 and speed = 0 …) if brake applied released transit to Pr **20.11** = 5
= 5	Waiting for brake applied (brake apply time Pr **19.25**)
= 6	Waiting for motor current decay
= 7	Waiting for contactor feedback released T31 = OFF

12.5 Error detection

The following section covers in detail the error detection features provided in the elevator software.

FAST start monitoring t062

During the FAST start the position for a closed loop system is monitored in the Elevator Solution Software and if any movement occurs which exceeds the distance programmed in Pr **70.59** a trip t062 is generated. Check control sequencing.

Speed error during stop t064

Following the positioning and during the stop if a speed error is detected when the drive is disabled and during brake control region a t064 trip will be generated. The speed error monitoring is active for 1 s following drive disable.

12.5.1 Speed error detection t070

Open loop

For open loop mode the speed error detection is activated once the drive enters current limit operation resulting in the t070 trip being generated after the time defined in Pr **19.24** (2 s default). Pr **19.24** is used to define the allowable time to operate in current limit, selecting very high values can result in the speed error detection being disabled.

Closed loop

The speed error is calculated from the difference between the ramp speed Pr **19.03** and the actual speed in **F49**, Pr **19.02**. The speed error is then compared with the user defined speed threshold set in Pr **19.24**. If the threshold is exceeded for more than 100 ms a t070 trip is generated. The speed error during one travel is displayed in Pr **18.07** independent of the activation of the speed error detection. The display is reset to 0 at each start.

NOTE

The speed error detection can be disabled by setting Pr **19.24** = 0, but doing so will mean that the system will continue to operate with a constant speed error and possible system fault. Where possible the threshold should be increased before disabling the error detection.

Distance error detection t071

The distance error detection is the integral of the difference between the ramp speed Pr **19.03** and the actual speed in **F49**, Pr **19.02** and is active for closed loop operation.

The calculated distance error is compared to the user defined distance error threshold in Pr **19.18**. If the actual distance error exceeds the user defined distance error a t071 trip is generated. The distance error during one travel is displayed in Pr **18.06** independent of the activation of the distance error detection being enabled. The distance error is reset to zero at the start of each travel.

NOTE

The distance error detection can be disabled by setting Pr **19.18** = 0, but doing so will mean that the system will continue to operate with a constant speed error and possible system fault. Where possible the threshold should be increased before disabling the error detection.

NOTE

Distance error detection is only active for closed loop operation.

Figure 12-4 Speed and Distance error detection

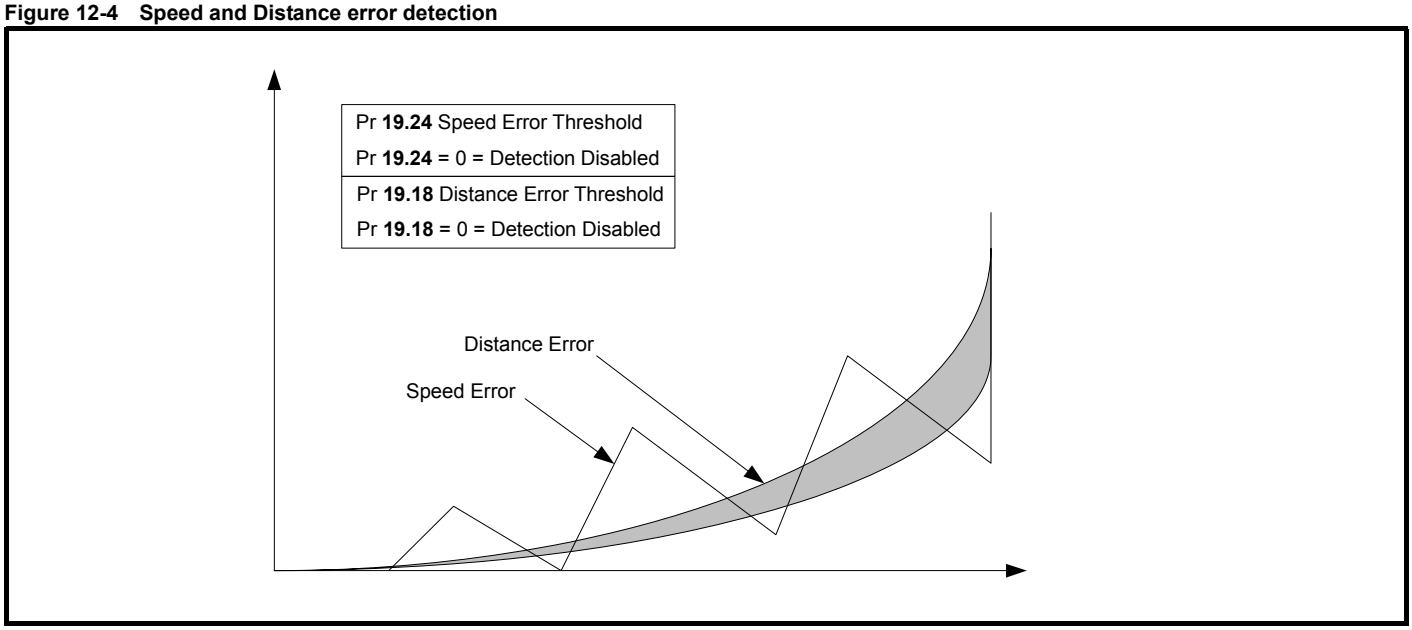

Possible causes for the Speed error t070 and Distance error t071 detection trips can be due to the following

Errors with motor connections

1. Phase rotation

Encoder feedback fault

2. Phases rotated
3. Induced noise
4. Encoder feedback failure

Drive set-up errors

5. Encoder feedback parameter set-up
6. Motor map parameter set-up
7. Phase offset, PM motors rotating auto tune required
8. Gains settings resulting in instability

Secure disable - Fast disable input t072, t074, t075

Both the Secure disable and Fast disable inputs are monitored during operation and a trip generated when a fault condition occurs to ensure correct operation of the elevator. The trips generated are as follows:

t072, Internal secure disable trip

The t072 trip is generated when the Secure disable at control terminal T31 of the drive is disabled but there is still current present on the motor, which indicates a possible fault internally on the drive, which has resulted in the output of the drive not being disabled.

Under a fault condition check the sequencing of the Secure disable input on control terminal T31.

t074, Fast disable input defect

The t074 trip monitors the Fast disable input if configured on the drives control terminal. To configure the Fast disable a digital input is routed to Pr **6.29** in the drive. The digital input which is selected for the Fast disable is then automatically monitored and under a fault condition where the digital input is not switched in 3 seconds as expected, the t074 trip is generated.

Setting the digital input from 6.29 to 00.00 will disable the trip and the Fast disable input.

t075, Secure disable input defect

The t075 trip is generated when the Secure disable on control terminal T31 of the drive which is monitored does not switch state as expected in three seconds. This indicates a possible fault in the Secure disable circuit of the system and the trip t075 is generated.

Under a fault condition check the Secure disable control connections between the drive and the elevator controller.

Temperature trip t073

The elevator software monitors the drive temperatures if these exceed the lower limit set in Pr **70.81** (default 0 °C) a t073 will be generated. This trip is present to protect the drive when starting in extreme cold conditions.

If the t073 trip is experienced during start up of the elevator a pre heater will be required to ensure the minimum temperature for operation is greater than 0 °C.

In addition to the t073 trip there is also a motor thermistor trip for more details refer to section 5.2 *Motor thermistor input* on page 76.

Motor fluxed t076

During the start sequence of the elevator the elevator software monitors the magnetization current Pr **20.07** in the motor and compares this to a user defined threshold Pr **18.23**. If the magnetization current does not reach or exceed the threshold a trip is generated and the start sequence stopped. This ensures that the brake will not be lifted unless the motor is fully magnetized. Detection is active for the first three seconds after enable.

If a trip is encountered check motor connections, motor map settings and motor contactor control.

Motor phase loss t077

The motor phase loss detection can be enabled and disabled with Pr **19.43**. This feature monitors the motor voltage and if during start, after 200 ms more than 66 % of the nominal motor voltage required is not present, the t077 trip is generated.

Check motor map settings, motor connections at both drive and motor, output motor contactor connections.

Motor contactor monitor t078

The motor contactor monitor uses an auxiliary contact on the motor contactors that is used to feed a signal back to the drive. A digital input is used to route this signal to Pr **19.33**. The motor contactor monitor is enabled with Pr **19.40** = ON.

If experiencing a t078 trip, check both the motor contactor or contactors and also the auxiliary feedback to the drives control terminal. Ensure the digital input is routed correctly to Pr **19.33**.

Software version t079

The software trip t079 is available to check the elevator software where a Fast disable input has been set-up and the software version of the drive is incompatible, i.e the drive software must be greater than 1.10.

If experiencing the t079 trip the drive software must be re-programmed or the Fast disable input deactivated by setting the digital input routed to Pr **6.29** to 00.00.

Inverted encoder connections t080

The t080 trip indicates that either the encoder feedback signals or the motor power connections have been rotated. This results in the motor rotating in one direction and the feedback incrementing in the opposite direction. The trip is generated by monitoring the following error and if the following error is greater than the actual ramp speed, the trip is generated.

Check both the motor and encoder feedback connections.

Brake contact monitoring t083

The monitoring of two brake feedback contacts can be carried out by the Unidrive SP and the Elevator Solution Software using one or two digital input terminals T24 to T29 of the base drive. The digital input terminals are monitored to follow the brake output state Pr **18.31**. If the state of the activated brake monitoring contacts does not follow inside the brake release delay Pr **19.25** or brake apply delay Pr **18.24** the drive will cause t083 trip.

NOTE

If Pr **17.18** = 1 (SM-Applications, SM-Applications Lite watchdog enable) an SLX.tO trip, (Solutions Module watchdog timeout) is displayed after the Unidrive SP trips. This trip must be reset separately either via the keypad reset button or by setting Pr **xx.00** to 1070.

12.5.2 Control diagnostics

If the normal run command is applied and the Unidrive SP elevator solution does not start or a trip is generated at this stage, then proceed as follows:

Figure 12-5 Diagnostic control interface

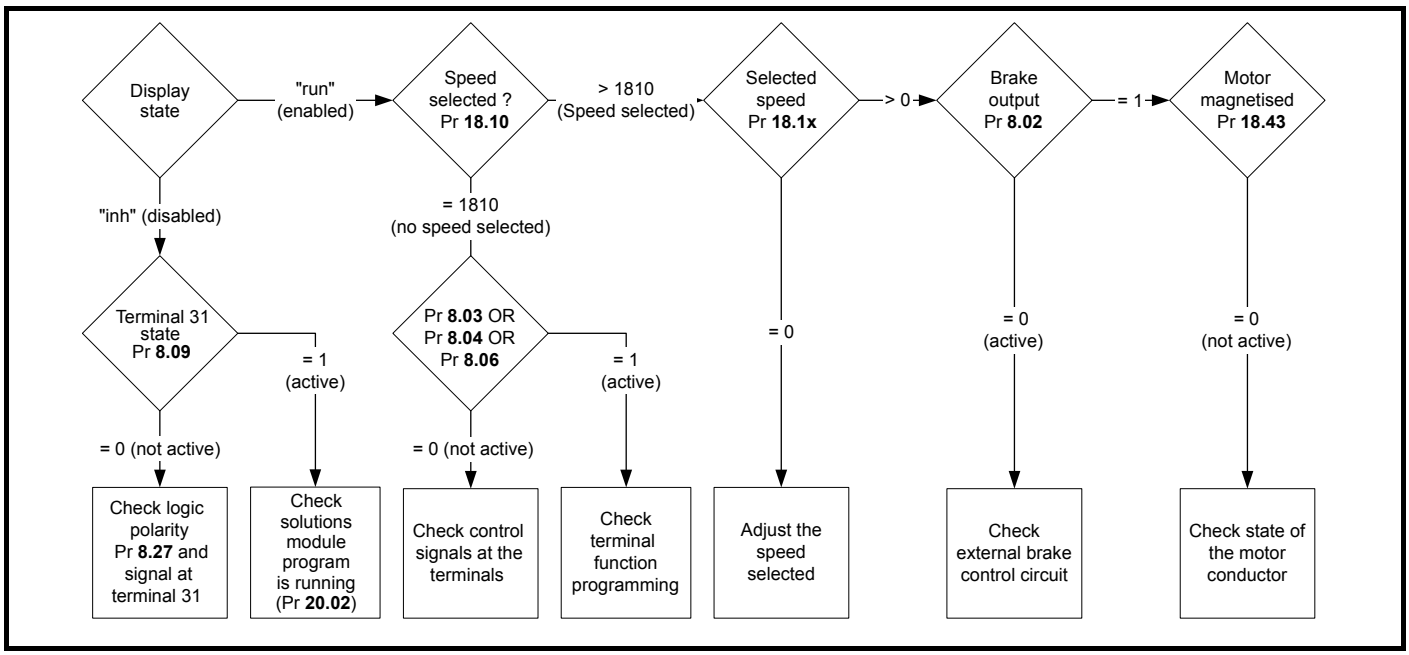

12.6 Unidrive SP trip codes

Trip	Diagnosis
br.th	**Internal braking resistor thermistor temperature monitoring fail (size 0 only)**
10	If no internal brake resistor is installed, set Pr **0.51** (or Pr **10.37**) to 8 to disable this trip. If an internal brake resistor is installed: • Ensure that the internal braking resistor thermistor is connected correctly • Ensure that the fan in the drive is working correctly • Replace the internal braking resistor
C.Acc	**SMARTCARD trip: SMARTCARD Read / Write fail**
185	Check SMARTCARD is installed / located correctly Ensure SMARTCARD is not writing data to data location 500 to 999 Replace SMARTCARD
C.boot	**SMARTCARD trip: The menu 0 parameter modification cannot be saved to the SMARTCARD because the necessary file has not been created on the SMARTCARD**
177	A write to a menu 0 parameter has been initiated via the keypad with Pr **11.42** set to auto(3) or boot(4), but the necessary file on the SMARTCARD has not bee created Ensure that Pr **11.42** is correctly set and reset the drive to create the necessary file on the SMARTCARD Re-attempt the parameter write to the menu 0 parameter
C.bUSY	**SMARTCARD trip: SMARTCARD can not perform the required function as it is being accessed by a Solutions Module**
178	Wait for the Solutions Module to finish accessing the SMARTCARD and then re-attempt the required function
C.Chg	**SMARTCARD trip: Data location already contains data**
179	Erase data in data location Write data to an alternative data location
C.cPr	**SMARTCARD trip: The values stored in the drive and the values in the data block on the SMARTCARD are different**
188	Press the red reset button
C.dAt	**SMARTCARD trip: Data location specified does not contain any data**
183	Ensure data block number is correct
C.Err	**SMARTCARD trip: SMARTCARD data is corrupted**
182	Ensure the card is located correctly Erase data and retry Replace SMARTCARD
C.Full	**SMARTCARD trip: SMARTCARD full**
184	Delete a data block or use different SMARTCARD
cL2	**Analog input 2 current loss (current mode)**
28	Check analog input 2 (terminal 7) current signal is present (4-20 mA, 20-4 mA)
cL3	**Analog input 3 current loss (current mode)**
29	Check analog input 3 (terminal 8) current signal is present (4-20 mA, 20-4 mA)
CL.bit	**Trip initiated from the control word (Pr 6.42)**
35	Disable the control word by setting Pr **6.43** to 0 or check setting of Pr **6.42**
ConF.P	**The number of power modules installed no longer matches the value stored in Pr 11.35**
111	Ensure that all power modules are correctly connected Ensure that all power modules have powered up correctly Ensure that the value in Pr **11.35** matches the number of power modules connected
C.OPtn	**SMARTCARD trip: Solutions Modules installed are different between source drive and destination drive**
180	Ensure correct Solutions Modules are installed Ensure Solutions Modules are in the same Solutions Module slot Press the red reset button
C.Prod	**SMARTCARD trip: The data blocks on the SMARTCARD are not compatible with this product**
175	Erase all data on the SMARTCARD by setting Pr **xx.00** to 9999 and pressing the red reset button Replace SMARTCARD
C.rdo	**SMARTCARD trip: SMARTCARD has the Read Only bit set**
181	Enter 9777 in Pr **xx.00** to allow SMARTCARD Read / Write access Ensure the drive is not writing to data locations 500 to 999 on the card

Trip	Diagnosis
C.rtg	**SMARTCARD trip: The voltage and/or current rating of the source and destination drives are different**
186	Drive rating dependent parameters (parameters with the RA coding) are likely to have different values and ranges with drives of different voltage and current ratings. Parameters with this attribute will not be transferred to the destination drive by SMARTCARDs when the rating of the destination drive is different from the source drive and the file is a parameter file. However, with software V01.09.00 and later drive rating dependent parameters will be transferred if only the current rating is different and the file is a differences from default type file. Press the red reset button Drive rating parameters are:

Parameter	Function
2.08	Standard ramp voltage
4.05/6/7, **21.27/8/9**	Current limits
4.24	User current maximum scaling
5.07, **21.07**	Motor rated current
5.09, **21.09**	Motor rated voltage
5.10, **21.10**	Rated power factor
5.17, **21.12**	Stator resistance
5.18	Switching frequency
5.23, **21.13**	Voltage offset
5.24, **21.14**	Transient inductance
5.25, **21.24**	Stator inductance
6.06	DC injection braking current
6.48	Line power supply loss ride through detection level

The above parameters will be set to their default values.

C.TyP	**SMARTCARD trip: SMARTCARD parameter set not compatible with drive**
187	Press the reset button Ensure destination drive type is the same as the source parameter file drive type
dESt	**Two or more parameters are writing to the same destination parameter**
199	Set Pr **xx.00** = 12001 check all visible parameters in the menus for duplication
EEF	**EEPROM data corrupted - Drive mode becomes open loop and serial comms will timeout with remote keypad on the drive RS485 comms port.**
31	This trip can only be cleared by loading default parameters and saving parameters
EnC1	**Drive encoder trip: Encoder power supply overload**
189	Check encoder power supply wiring and encoder current requirement Maximum current = 200 mA @ 15 V, or 300 mA @ 8 V and 5 V
EnC2	**Drive encoder trip: Wire break (Drive encoder terminals 1 & 2, 3 & 4, 5 & 6)**
190	Check cable continuity Check wiring of feedback signals is correct Check encoder power supply is set correctly in Pr **3.36** Replace feedback device If wire break detection on the main drive encoder input is not required, set Pr **3.40** = 0 to disable the Enc2 trip
EnC3	**Drive encoder trip: Phase offset incorrect while running**
191	Check the encoder signal for noise Check encoder shielding Check the integrity of the encoder mechanical mounting Repeat the offset measurement test
EnC4	**Drive encoder trip: Feedback device comms failure**
192	Ensure encoder power supply is correct Ensure baud rate is correct Check encoder wiring Replace feedback device
EnC5	**Drive encoder trip: Checksum or CRC error**
193	Check the encoder signal for noise Check the encoder cable shielding With EnDat encoders, check the comms resolution and/or carry out the auto-configuration Pr **3.41**
EnC6	**Drive encoder trip: Encoder has indicated an error**
194	Replace feedback device With SSI encoders, check the wiring and encoder supply setting

Trip	Diagnosis
EnC7	**Drive encoder trip: Initialization failed**
195	Re-set the drive Check the correct encoder type is entered into Pr **3.38** Check encoder wiring Check encoder power supply is set correctly Carry out the auto-configuration Pr **3.41** Replace feedback device
EnC8	**Drive encoder trip: Auto configuration on power-up has been requested and failed**
196	Change the setting of Pr **3.41** to 0 and manually enter the drive encoder turns (Pr **3.33**) and the equivalent number of lines per revolution (Pr **3.34**) Check the comms resolution
EnC9	**Drive encoder trip: Position feedback selected is selected from a Solutions Module slot which does not have a speed / position feedback Solutions Module installed**
197	Check setting of Pr **3.26** (or Pr **21.21** if the second motor parameters have been enabled)
EnC10	**Drive encoder trip: Servo mode phasing failure because encoder phase angle (Pr 3.25 or Pr 21.20) is incorrect**
198	Check the encoder wiring. Perform an autotune to measure the encoder phase angle or manually enter the correct phase angle into Pr **3.25** (or Pr **21.20**). Spurious Enc10 trips can be seen in very dynamic applications. This trip can be disabled by setting the overspeed threshold in Pr **3.08** to a value greater than zero. Caution should be used in setting the over speed threshold level as a value which is too large may mean that an encoder fault will not be detected.
Enc11	**Drive encoder trip: A failure has occurred during the alignment of the analog signals of a SINCOS encoder with the digital count derived from the sine and cosine waveforms and the comms position (if applicable). This fault is usually due to noise on the sine and cosine signals.**
161	Check encoder cable shield. Examine sine and cosine signals for noise.
Enc12	**Drive encoder trip: Hiperface encoder - The encoder type could not be identified during auto-configuration**
162	Check encoder type can be auto-configured. Check encoder wiring. Enter parameters manually.
Enc13	**Drive encoder trip: EnDat encoder - The number of encoder turns read from the encoder during auto-configuration is not a power of 2**
163	Select a different type of encoder.
Enc14	**Drive encoder trip: EnDat encoder - The number of comms bits defining the encoder position within a turn read from the encoder during auto-configuration is too large.**
164	Select a different type of encoder. Faulty encoder.
Enc15	**Drive encoder trip: The number of periods per revolution calculated from encoder data during auto-configuration is either less than 2 or greater than 50,000.**
165	Linear motor pole pitch / encoder ppr set up is incorrect or out of parameter range i.e. Pr **5.36** = 0 or Pr **21.31** = 0. Faulty encoder.
Enc16	**Drive encoder trip: EnDat encoder - The number of comms bits per period for a linear encoder exceeds 255.**
166	Select a different type of encoder. Faulty encoder.
Enc17	**Drive encoder trip: The periods per revolution obtained during auto-configuration for a rotary SINCOS encoder is not a power of two.**
167	Select a different type of encoder. Faulty encoder.
ENP.Er	**Data error from electronic nameplate stored in selected position feedback device**
176	Replace feedback device
Et	**External trip**
6	Check terminal 31 signal Check value of Pr **10.32** Enter 12001 in Pr **xx.00** and check for parameter controlling Pr **10.32** Ensure Pr **10.32** or Pr **10.38** (=6) are not being controlled by serial comms
HF01	**Data processing error: CPU address error**
	Hardware fault - return drive to supplier

Trip	Diagnosis
HF02	**Data processing error: DMAC address error**
	Hardware fault - return drive to supplier
HF03	**Data processing error: Illegal instruction**
	Hardware fault - return drive to supplier
HF04	**Data processing error: Illegal slot instruction**
	Hardware fault - return drive to supplier
HF05	**Data processing error: Undefined exception**
	Hardware fault - return drive to supplier
HF06	**Data processing error: Reserved exception**
	Hardware fault - return drive to supplier
HF07	**Data processing error: Watchdog failure**
	Hardware fault - return drive to supplier
HF08	**Data processing error: Level 4 crash**
	Hardware fault - return drive to supplier
HF09	**Data processing error: Heap overflow**
	Hardware fault - return drive to supplier
HF10	**Data processing error: Router error**
	Hardware fault - return drive to supplier
HF11	**Data processing error: Access to EEPROM failed**
	Hardware fault - return drive to supplier
HF12	**Data processing error: Main program stack overflow**
	Hardware fault - return drive to supplier
HF13	**Data processing error: Software incompatible with hardware**
	Hardware or software fault - return drive to supplier
HF17	**Multi-module system thermistor short circuit or open circuit**
217	Hardware fault - return drive to supplier
HF18	**Multi-module system interconnect cable error**
218	Hardware fault - return drive to supplier
HF19	**Temperature feedback multiplexing failure**
219	Hardware fault - return drive to supplier
HF20	**Power stage recognition: serial code error**
220	Hardware fault - return drive to supplier
HF21	**Power stage recognition: unrecognized frame size**
221	Hardware fault - return drive to supplier
HF22	**Power stage recognition: multi module frame size mismatch**
222	Hardware fault - return drive to supplier
HF23	**Power stage recognition: multi module voltage or current rating mismatch**
223	Hardware fault - return drive to supplier
HF24	**Power stage recognition: unrecognized drive size**
224	Hardware fault - return drive to supplier
HF25	**Current feedback offset error**
225	Hardware fault - return drive to supplier
HF26	**Soft start relay failed to close, soft start monitor failed or braking IGBT short circuit at power-up**
226	Hardware fault - return drive to supplier
HF27	**Power stage thermistor 1 fault**
227	Hardware fault - return drive to supplier

Trip	Diagnosis
HF28	**Power stage thermistor 2 fault, or internal fan fault (size 3)**
228	Hardware fault - return drive to supplier
HF29	**Control board thermistor fault**
229	Hardware fault - return drive to supplier
HF30	**DCCT wire break trip from power module**
230	Hardware fault - return drive to supplier
HF31	**Internal capacitor bank fan failure (size 4 and larger) or a module has not powered up in a multi-module parallel drive**
231	Check the AC or DC power supply to all modules in a multi-module parallel drive If the AC or DC power supply is present, or if this is a single drive, then there is a hardware fault - return drive to the supplier
HF32	**Power stage - Identification and trip information serial code error**
232	Hardware fault - return drive to the supplier
It.AC	**Output current overload timed out (I^2t) - accumulator value can be seen in Pr 4.19**
20	Ensure the load is not jammed / sticking Check the load on the motor has not changed If seen during an autotune in servo mode, ensure that the motor rated current Pr **0.46** (Pr **5.07**) or Pr **21.07** is ≤Heavy Duty current rating of the drive Tune the rated speed parameter (closed loop vector only) Check feedback device signal for noise Check the feedback device mechanical coupling
It.br	**Braking resistor overload timed out (I^2t) – accumulator value can be seen in Pr 10.39**
19	Ensure the values entered in Pr **10.30** and Pr **10.31** are correct Increase the power rating of the braking resistor and change Pr **10.30** and Pr **10.31** If an external thermal protection device is being used and the braking resistor software overload is not required, set Pr **10.30** or Pr **10.31** to 0 to disable the trip
L.SYnC	**Drive failed to synchronize to the supply voltage in Regen mode**
39	Refer to the *Diagnostics* chapter in the *Unidrive SP Regen Installation Guide*.
O.CtL	**Drive control board over temperature**
23	Check enclosure / drive fans are still functioning correctly Check enclosure ventilation paths Check enclosure door filters Check ambient temperature Reduce drive switching frequency
O.ht1	**Power device over temperature based on thermal model**
21	Reduce drive switching frequency Reduce duty cycle Decrease acceleration / deceleration rates Reduce motor load
O.ht2	**Heatsink over temperature**
22	Check enclosure / drive fans are still functioning correctly Check enclosure ventilation paths Check enclosure door filters Increase ventilation Decrease acceleration / deceleration rates Reduce drive switching frequency Reduce duty cycle Reduce motor load
Oht2.P	**Power module heatsink over temperature**
105	Check enclosure / drive fans are still functioning correctly Check enclosure ventilation paths Check enclosure door filters Increase ventilation Decrease acceleration / deceleration rates Reduce drive switching frequency Reduce duty cycle Reduce motor load

Trip	Diagnosis
O.ht3	**Drive over-temperature based on thermal model**
27	The drive will attempt to stop the motor before tripping. If the motor does not stop in 10 s the drive trips immediately. Check enclosure / drive fans are still functioning correctly Check enclosure ventilation paths Check enclosure door filters Increase ventilation Decrease acceleration / deceleration rates Reduce duty cycle Reduce motor load
Oht4.P	**Power module rectifier over temperature or input snubber resistor over temperature (size 4 and above)**
102	Check for supply imbalance Check for supply disturbance such as notching from a DC drive Check enclosure / drive fans are still functioning correctly Check enclosure ventilation paths Check enclosure door filters Increase ventilation Decrease acceleration / deceleration rates Reduce drive switching frequency Reduce duty cycle Reduce motor load
OI.AC	**Instantaneous output over current detected: peak output current greater than 225 %**
3	Acceleration /deceleration rate is too short. If seen during autotune reduce voltage boost Pr **5.15** Check for short circuit on output cabling Check integrity of motor insulation Check feedback device wiring Check feedback device mechanical coupling Check feedback signals are free from noise Is motor cable length within limits for that frame size? Reduce the values in speed loop gain parameters – Pr **3.10**, Pr **3.11** and Pr **3.12** (closed loop vector and servo modes only) Has offset measurement test been completed? (servo mode only) Reduce the values in current loop gain parameters - Pr **4.13** and Pr **4.14** (closed loop vector and servo modes only)
OIAC.P	**Power module over current detected from the module output currents**
104	Acceleration /deceleration rate is too short. If seen during autotune reduce voltage boost Pr **5.15** Check for short circuit on output cabling Check integrity of motor insulation Check feedback device wiring Check feedback device mechanical coupling Check feedback signals are free from noise Is motor cable length within limits for that frame size? Reduce the values in speed loop gain parameters – Pr **3.10**, Pr **3.11** and Pr **3.12** (closed loop vector and servo modes only) Has offset measurement test been completed? (servo mode only) Reduce the values in current loop gain parameters - Pr **4.13** and Pr **4.14** (closed loop vector and servo modes only)
OI.br	**Braking transistor over-current detected: short circuit protection for the braking transistor activated**
4	Check braking resistor wiring Check braking resistor value is greater than or equal to the minimum resistance value Check braking resistor insulation
OIbr.P	**Power module braking IGBT over current**
103	Check braking resistor wiring Check braking resistor value is greater than or equal to the minimum resistance value Check braking resistor insulation
OIdC.P	**Power module over current detected from IGBT on state voltage monitoring**
109	Vce IGBT protection activated. Check motor and cable insulation.
O.Ld1	**Digital output overload: total current drawn from 24 V supply and digital outputs exceeds 200 mA**
26	Check total load on digital outputs (terminals 24,25 and 26)and +24 V rail (terminal 22)
O.SPd	**Motor speed has exceeded the over speed threshold**
7	Increase the over speed trip threshold in Pr **3.08** (closed loop vector and servo modes only) Speed has exceeded 1.2 x Pr **1.06** or Pr **1.07** (open loop mode) Reduce the speed loop P gain (Pr **3.10**) to reduce the speed overshoot (closed loop vector and servo modes only)

Trip	Diagnosis
OV	**DC bus voltage has exceeded the peak level or the maximum continuous level for 15 seconds**
2	Increase deceleration ramp (Pr **0.04**) Decrease braking resistor value (staying above the minimum value) Check nominal AC supply level Check for supply disturbances which could cause the DC bus to rise – voltage overshoot after supply recovery from a notch induced by DC drives Check motor insulation **Drive voltage rating** / **Peak voltage** / **Maximum continuous voltage level (15 s)** 200 / 415 / 410 400 / 830 / 815 575 / 990 / 970 690 / 1190 / 1175 If the drive is operating in low voltage DC mode the overvoltage trip level is 1.45 x Pr **6.46**.
OV.P	**Power module DC bus voltage has exceeded the peak level or the maximum continuous level for 15 seconds**
106	Increase deceleration ramp (Pr **0.04**) Decrease braking resistor value (staying above the minimum value) Check nominal AC supply level Check for supply disturbances which could cause the DC bus to rise – voltage overshoot after supply recovery from a notch induced by DC drives Check motor insulation **Drive voltage rating** / **Peak voltage** / **Maximum continuous voltage level (15 s)** 200 / 415 / 410 400 / 830 / 815 575 / 990 / 970 690 / 1190 / 1175 If the drive is operating in low voltage DC mode the overvoltage trip level is 1.45 x Pr **6.46**.
PAd	**Keypad has been removed when the drive is receiving the speed reference from the keypad**
34	Install keypad and reset Change speed reference selector to select speed reference from another source
PH	**AC voltage input phase loss or large supply imbalance detected**
32	Ensure all three phases are present and balanced Check input voltage levels are correct (at full load) **NOTE** Load level must be between 50 and 100 % for the drive to trip under phase loss conditions. The drive will attempt to stop the motor before this trip is initiated.
PH.P	**Power module phase loss detection**
107	Ensure all three phases are present and balanced Check input voltage levels are correct (at full load)
PS	**Internal power supply fault**
5	Remove any Solutions Modules and reset Hardware fault - return drive to supplier
PS.10V	**10V user power supply current greater than 10 mA**
8	Check wiring to terminal 4 Reduce load on terminal 4
PS.24V	**24V internal power supply overload**
9	The total user load of the drive and Solutions Modules has exceeded the internal 24 V power supply limit. The user load consists of the drive's digital outputs, the SM-I/O Plus digital outputs, the drive's main encoder supply, and the SM-Universal Encoder Plus encoder supply, and the SM-Encoder Output Plus encoder supply. • Reduce load and reset • Provide an external 24 V >50 W power supply • Remove any Solutions Modules and reset
PS.P	**Power module power supply fail**
108	Remove any Solutions Modules and reset Hardware fault - return drive to supplier
PSAVE.Er	**Power down save parameters in the EEPROM are corrupt**
37	Indicates that the power was removed when power down save parameters were being saved. The drive will revert back to the power down parameter set that was last saved successfully. Perform a user save (Pr **xx.00** to 1000 or 1001 and reset the drive) or power down the drive normally to ensure this trip does or occur the next time the drive is powered up.

Trip	Diagnosis
rS	**Failure to measure resistance during autotune or when starting in open loop vector mode 0 or 3**
33	Check motor power connection continuity
SAVE.Er	**User save parameters in the EEPROM are corrupt**
36	Indicates that the power was removed when user parameters were being saved. The drive will revert back to the user parameter set that was last saved successfully. Perform a user save (Pr **xx.00** to 1000 or 1001 and reset the drive) to ensure this trip does or occur the next time the drive is powered up.
SCL	**Drive RS485 serial comms loss to remote keypad**
30	Reinstall the cable between the drive and keypad Check cable for damage Replace cable Replace keypad
SLX.dF	**Solutions Module slot X trip: Solutions Module type installed in slot X changed**
204,209,214	Save parameters and reset

Trip	Diagnosis
SLX.Er	**Solutions Module slot X trip: Solutions Module in slot X has detected a fault**

202,207,212

Feedback module category

Check value in Pr **15**/**16**/**17.50**. The following table lists the possible error codes for the SM-Universal Encoder Plus, SM-Encoder Output Plus, SM-Encoder Plus and SM-Resolver. See the *Diagnostics* section in the relevant Solutions Module User Guide for more information.

Error code	Module	Trip Description	Diagnostic
0	All	No trip	No fault detected
1	SM-Universal Encoder Plus & SM-Encoder Output Plus	Encoder power supply overload	Check encoder power supply wiring and encoder current requirement Maximum current = 200 mA @ 15 V, or 300 mA @ 8 V and 5 V
	SM-Resolver	Excitation output short circuit	Check the excitation output wiring.
2	SM-Universal Encoder Plus & SM-Resolver	Wire break	Check cable continuity Check wiring of feedback signals is correct Check supply voltage or excitation output level Replace feedback device
3	SM-Universal Encoder Plus	Phase offset incorrect while running	Check the encoder signal for noise Check encoder shielding Check the integrity of the encoder mechanical mounting Repeat the offset measurement test
4	SM-Universal Encoder Plus	Feedback device communications failure	Ensure encoder power supply is correct Ensure baud rate is correct Check encoder wiring Replace feedback device
5	SM-Universal Encoder Plus	Checksum or CRC error	Check the encoder signal for noise Check the encoder cable shielding
6	SM-Universal Encoder Plus	Encoder has indicated an error	Replace encoder
7	SM-Universal Encoder Plus	Initialization failed	Check the correct encoder type is entered into Pr **15**/**16**/**17.15** Check encoder wiring Check supply voltage level Replace feedback device
8	SM-Universal Encoder Plus	Auto configuration on power-up has been requested and failed	Change the setting of Pr **15**/**16**/**17.18** and manually enter the number of turns bits (Pr **15**/**16**/**17.09**) and the equivalent number of lines per revolution (Pr **15**/**16**/**17.10**) and the single turn comms bits (Pr **15**/**16**/**17.11**)
9	SM-Universal Encoder Plus	Motor thermistor trip	Check motor temperature Check thermistor continuity
10	SM-Universal Encoder Plus	Motor thermistor short circuit	Check motor thermistor wiring Replace motor / motor thermistor
11	SM-Universal Encoder Plus	Failure of the sincos analog position alignment during encoder initialization	Check encoder cable shield. Examine sine and cosine signals for noise.
	SM-Resolver	Poles not compatible with motor	Check that the correct number of resolver poles has been set in Pr **15**/**16**/**17.15**.
12	SM-Universal Encoder Plus	Encoder type could not be identified during auto-configuration	Check encoder type can be auto-configured. Check encoder wiring. Enter parameters manually.
13	SM-Universal Encoder Plus	Number of encoder turns read from the encoder during auto-configuration is not a power of 2	Select a different type of encoder.
14	SM-Universal Encoder Plus	Number of comms bits defining the encoder position within a turn read from the encoder during auto-configuration is too large.	Select a different type of encoder. Faulty encoder.
15	SM-Universal Encoder Plus	The number of periods per revolution calculated from encoder data during auto-configuration is either <2 or >50,000.	Linear motor pole pitch / encoder ppr set up is incorrect or out of parameter range i.e. Pr **5.36** = 0 or Pr **21.31** = 0. Faulty encoder.
16	SM-Universal Encoder Plus	The number of comms bits per period for a linear encoder exceeds 255.	Select a different type of encoder. Faulty encoder.
74	All	Solutions Module has overheated	Check ambient temperature Check enclosure ventilation

Trip	Diagnosis
SLX.Er	**Solutions Module slot X trip: Solutions Module in slot X has detected a fault**
202,207,212	**Automation (Applications) module category** Check value in Pr **15**/**16**/**17.50**. The following table lists the possible error codes for the SM-Applications and SM-Applications Lite. See the *Diagnostics* section in the relevant Solutions Module User Guide for more information.

Error Code	Trip Description
39	User program stack overflow
40	Unknown error - please contact supplier
41	Parameter does not exist
42	Attempt to write to a read-only parameter
43	Attempt to read from a write-only parameter
44	Parameter value out of range
45	Invalid synchronisation modes
46	Unused
48	RS485 not in user mode
49	Invalid RS485 configuration
50	Maths error - divide by zero or overflow
51	Array index out of range
52	Control word user trip
53	DPL program incompatible with target
54	DPL task overrun
55	Unused
56	Invalid timer unit configuration
57	Function block does not exist
58	Flash PLC Storage corrupt
59	Drive rejected application module as Sync master
60	CTNet hardware failure. Please contact your supplier
61	CTNet invalid configuration
62	CTNet invalid baud-rate
63	CTNet invalid node ID
64	Digital Output overload
65	Invalid function block parameter(s)
66	User heap too large
67	RAM file does not exist or a non-RAM file id has been specified
68	The RAM file specified is not associated to an array
69	Failed to update drive parameter database cache in Flash memory
70	User program downloaded while drive enabled
71	Failed to change drive mode
72	Invalid CTNet buffer operation
73	Fast parameter initialization failure
74	Over-temperature
75	Hardware unavailable
76	Module type cannot be resolved. Module is not recognised.
77	Inter-option module comms error with module in slot 1
78	Inter-option module comms error with module in slot 2
79	Inter-option module comms error with module in slot 3
80	Inter-option module comms error with module unknown slot
81	APC internal error
82	Communications to drive faulty

Trip	Diagnosis
SLX.Er	**Solutions Module slot X trip: Solutions Module in slot X has detected a fault**
202,207,212	**Automation (I/O Expansion) module category** Check value in Pr **15**/**16**/**17.50**. The following table lists the possible error codes for the SM-I/O Plus, SM-I/O Lite, SM-I/O Timer, SM-I/O PELV, SM-I/O 120V, SM-I/O 32 and SM-I/O 24V Protected. See the *Diagnostics* section in the relevant Solutions Module User Guide for more information.

Error code	Module	Reason for fault
0	All	No errors
1	All	Digital output overload
2	SM-I/O Lite, SM-I/O Timer	Analog input 1 current input too high (>22 mA) or too low (<3 mA)
	SM-I/O PELV, SM-I/O 24V Protected	Digital input overload
3	SM-I/O PELV, SM-I/O 24V Protected	Analog input 1 current input too low (<3 mA)
	SM-I/O 24V Protected	Communications error
4	SM-I/O PELV	User power supply absent
5	SM-I/O Timer	Real time clock communication error
74	All	Module over temperature

Trip	Diagnosis
SLX.Er	**Solutions Module slot X trip: Solutions Module in slot X has detected a fault**
202,207,212	**Fieldbus module category** Check value in Pr **15**/**16**/**17.50**. The following table lists the possible error codes for the Fieldbus modules. See the *Diagnostics* section in the relevant Solutions Module User Guide for more information.

Error code	Module	Trip Description
0	All	No trip
1	SM-EtherCAT	No fieldbus mode has been selected
2	SM-EtherCAT	Critical task over-run
52	SM-PROFIBUS-DP-V1, SM-INTERBUS, SM-DeviceNet, SM-CANOpen	User control word trip
58	SM-LON	Incorrect non-volatile storage
61	SM-PROFIBUS-DP-V1, SM-INTERBUS, SM-DeviceNet, SM-CANOpen, SM-SERCOS, SM-LON	Configuration error
62	SM-EtherCAT	Database initialization error
63	SM-EtherCAT	File system initialization error
64	SM-DeviceNet	Expected packet rate timeout
65	SM-PROFIBUS-DP-V1, SM-INTERBUS, SM-DeviceNet, SM-CANOpen, SM-SERCOS, SM-LON	Network loss
66	SM-PROFIBUS-DP-V1	Critical link failure
	SM-CAN, SM-DeviceNet, SM-CANOpen	Bus off error
69	SM-CAN, SM-EtherCAT	No acknowledgement
70	All (except SM-Ethernet and SM-LON)	Flash transfer error
	SM-Ethernet, SM-LON	No valid menu data available for the module from the drive
74	All	Solutions module over temperature
75	SM-Ethernet, SM-EtherCAT	The drive is not responding
76	SM-Ethernet, SM-EtherCAT	The Modbus connection has timed out
80	All (except SM-SERCOS)	Inter-option communications error
81	All (except SM-SERCOS)	Communications error to slot 1
82	All (except SM-SERCOS)	Communications error to slot 2
83	All (except SM-SERCOS)	Communications error to slot 3
84	SM-Ethernet, SM-EtherCAT	Memory allocation error
85	SM-Ethernet, SM-EtherCAT	File system error
86	SM-Ethernet, SM-EtherCAT	Configuration file error
87	SM-Ethernet	Language file error
97	SM-Ethernet	Timed event over-run
98	All	Internal watchdog error
99	All	Internal software error

Trip	Diagnosis
SLX.HF	**Solutions Module slot X trip: Solutions Module X hardware fault**
200,205,210	Ensure Solutions Module is installed correctly Return Solutions Module to supplier
SLX.nF	**Solutions Module slot X trip: Solutions Module has been removed**
203,208,213	Ensure Solutions Module is installed correctly Reinstall Solutions Module Save parameters and reset drive
SL.rtd	**Solutions Module trip: Drive mode has changed and Solutions Module parameter routing is now incorrect**
215	Press reset. If the trip persists, contact the supplier of the drive.
SLX.tO	**Solutions Module slot X trip: Solutions Module watchdog timeout**
201,206,211	Press reset. If the trip persists, contact the supplier of the drive.
t038	**User trip defined in 2nd processor Solutions Module code**
38	SM-Applications program must be interrogated to find the cause of this trip
t040 to t089	**User trip defined in 2nd processor Solutions Module code**
40 to 89	SM-Applications program must be interrogated to find the cause of this trip t070 to t080 refer to section 12.2 *Elevator specific diagnostics* on page 198
t099	**User trip defined in 2nd processor Solutions Module code**
99	SM-Applications program must be interrogated to find the cause of this trip
t101	**User trip defined in 2nd processor Solutions Module code**
101	SM-Applications program must be interrogated to find the cause of this trip
t112 to t160	**User trip defined in 2nd processor Solutions Module code**
112 to 160	SM-Applications program must be interrogated to find the cause of this trip
t168 to t174	**User trip defined in 2nd processor Solutions Module code**
168 to 174	SM-Applications program must be interrogated to find the cause of this trip
t216	**User trip defined in 2nd processor Solutions Module code**
216	SM-Applications program must be interrogated to find the cause of this trip
th	**Motor thermistor trip**
24	Check motor temperature Check thermistor continuity Set Pr **7.15** = VOLt and reset the drive to disable this function
thS	**Motor thermistor short circuit**
25	Check motor thermistor wiring Replace motor / motor thermistor Set Pr **7.15** = VOLt and reset the drive to disable this function
tunE*	**Autotune stopped before completion**
18	The drive has tripped out during the autotune The red stop key has been pressed during the autotune The SAFE TORQUE OFF (SECURE DISABLE) signal (terminal 31) was active during the autotune procedure
tunE1*	**The position feedback did not change or required speed could not be reached during the inertia test (see Pr 5.12)**
11	Ensure the motor is free to turn i.e. brake was released Ensure Pr **3.26** and Pr **3.38** are set correctly Check feedback device wiring is correct Check encoder coupling to motor
tunE2*	**Position feedback direction incorrect or motor could not be stopped during the inertia test (see Pr 5.12)**
12	Check motor cable wiring is correct Check feedback device wiring is correct Swap any two motor phases
tunE3*	**Drive encoder commutation signals connected incorrectly or measured inertia out of range (see Pr 5.12)**
13	Check motor cable wiring is correct Check feedback device U,V and W commutation signal wiring is correct

Trip	Diagnosis
tunE4*	**Drive encoder U commutation signal fail during an autotune**
14	Check feedback device U phase commutation wires continuity Replace encoder
tunE5*	**Drive encoder V commutation signal fail during an autotune**
15	Check feedback device V phase commutation wires continuity Replace encoder
tunE6*	**Drive encoder W commutation signal fail during an autotune**
16	Check feedback device W phase commutation wires continuity Replace encoder
tunE7*	**Motor number of poles set incorrectly**
17	Check lines per revolution for feedback device Check the number of poles in Pr **5.11** is set correctly
Unid.P	**Power module unidentified trip**
110	Check all interconnecting cables between power modules Ensure cables are routed away from electrical noise sources
UP ACC	**Onboard PLC program: cannot access Onboard PLC program file on drive**
98	Disable drive - write access is not allowed when the drive is enabled Another source is already accessing Onboard PLC program - retry once other action is complete
UP div0	**Onboard PLC program attempted divide by zero**
90	Check program
UP OFL	**Onboard PLC program variables and function block calls using more than the allowed RAM space (stack overflow)**
95	Check program
UP ovr	**Onboard PLC program attempted out of range parameter write**
94	Check program
UP PAr	**Onboard PLC program attempted access to a non-existent parameter**
91	Check program
UP ro	**Onboard PLC program attempted write to a read-only parameter**
92	Check program
UP So	**Onboard PLC program attempted read of a write-only parameter**
93	Check program
UP udF	**Onboard PLC program un-defined trip**
97	Check program
UP uSEr	**Onboard PLC program requested a trip**
96	Check program
UV	**DC bus under voltage threshold reached**
1	Check AC supply voltage level **Drive voltage rating (Vac)** / **Under voltage threshold (Vdc)** / **UV reset voltage (Vdc)** 200 / 175 / 215 400 / 330 / 425 575 & 690 / 435 / 590

*If a tunE through to a tunE 7 trip occurs, then after the drive is reset the drive cannot be made to run unless it is disabled via the Secure Disable input (terminal 31), drive enable parameter (Pr **6.15**) or the control word (Pr **6.42** and Pr **6.43**).

Table 12-5 Serial communications look-up table

No.	Trip	No.	Trip	No.	Trip
1	UV	40 to 89	t040 to t089	182	C.Err
2	OV	90	UP div0	183	C.dAt
3	OI.AC	91	UP PAr	184	C.FULL
4	OI.br	92	UP ro	185	C.Acc
5	PS	93	UP So	186	C.rtg
6	Et	94	UP ovr	187	C.TyP
7	O.SPd	95	UP OFL	188	C.cPr
8	PS.10V	96	UP uSEr	189	EnC1
9	PS.24V	97	UP udF	190	EnC2
10	br.th	98	UP ACC	191	EnC3
11	tunE1	99	t099	192	EnC4
12	tunE2	100		193	EnC5
13	tunE3	101	t101	194	EnC6
14	tunE4	102	Oht4.P	195	EnC7
15	tunE5	103	OIbr.P	196	EnC8
16	tunE6	104	OIAC.P	197	EnC9
17	tunE7	105	Oht2.P	198	EnC10
18	tunE	106	OV.P	199	DESt
19	It.br	107	PH.P	200	SL1.HF
20	It.AC	108	PS.P	201	SL1.tO
21	O.ht1	109	OldC.P	202	SL1.Er
22	O.ht2	110	Unid.P	203	SL1.nF
23	O.CtL	111	ConF.P	204	SL1.dF
24	th	112 to 160	t112 to t160	205	SL2.HF
25	thS	161	Enc11	206	SL2.tO
26	O.Ld1	162	Enc12	207	SL2.Er
27	O.ht3	163	Enc13	208	SL2.nF
28	cL2	164	Enc14	209	SL2.dF
29	cL3	165	Enc15	210	SL3.HF
30	SCL	166	Enc16	211	SL3.tO
31	EEF	167	Enc17	212	SL3.Er
32	PH	168 to 174	t168 to t174	213	SL3.nF
33	rS	175	C.Prod	214	SL3.dF
34	PAd	176	EnP.Er	215	SL.rtd
35	CL.bit	177	C.boot	216	t216
36	SAVE.Er	178	C.bUSY	217 to 232	HF17 to HF32
37	PSAVE.Er	179	C.Chg		
38	t038	180	C.OPtn		
39	L.SYnC	181	C.RdO		

The trips can be grouped into the following categories. It should be noted that a trip can only occur when the drive is not tripped or is already tripped but with a trip with a lower priority number.

Table 12-6 Trip categories

Priority	Category	Trips	Comments
1	Hardware faults	HF01 to HF16	These indicate fatal problems and cannot be reset. The drive is inactive after one of these trips and the display shows **HFxx**. The Drive OK relay opens and the serial comms will not function.
2	Non-resetable trips	HF17 to HF32, SL1.HF, SL2.HF, SL3.HF	Cannot be reset. Requires the drive to be powered down.
3	EEF trip	EEF	Cannot be reset unless a code to load defaults is first entered in Pr **xx.00** or Pr **11.43**.
4	SMARTCARD trips	C.boot, C.Busy, C.Chg, C.OPtn, C.RdO, C.Err, C.dat, C.FULL, C.Acc, C.rtg, C.TyP, C.cpr	Can be reset after 1.0 s SMARTCARD trips have priority 5 during power-up
4	Encoder power supply trips	PS.24V, EnC1	Can be reset after 1.0 s These trips can only override the following priority 5 trips: EnC2 to EnC8 or Enc11 to Enc17
5	Autotune	tunE, tunE1 to tunE7	Can be reset after 1.0s, but the drive cannot be made to run unless it is disabled via the SAFE TORQUE OFF input (terminal 31), *Drive enable* (Pr **6.15**) or the *Control word* (Pr **6.42** and Pr **6.43**).
5	Normal trips with extended reset	OI.AC, OI.Br, OIAC.P, OIBr.P, OIdC.P	Can be reset after 10.0 s
5	Normal trips	All other trips not included in this table	Can be reset after 1.0 s
5	Non-important trips	th, thS, Old1, cL2, cL3, SCL	If Pr **10.37** is 1 or 3 the drive will stop before tripping
5	Phase loss	PH	The drive attempts to stop before tripping
5	Drive over-heat based on thermal model	O.ht3	The drive attempts to stop before tripping, but if it does not stop within 10 s the drive will automatically trip
6	Self-resetting trips	UV	Under voltage trip cannot be reset by the user, but is automatically reset by the drive when the supply voltage is with specification

Although the UV trip operates in a similar way to all other trips, all drive functions can still operate but the drive cannot be enabled. The following differences apply to the UV trip:

1. Power-down save user parameters are saved when UV trip is activated except when the main high voltage supply is not active (i.e. operating in Low Voltage DC Supply Mode, Pr **6.44** = 1).
2. The UV trip is self-resetting when the DC bus voltage rises above the drive restart voltage level. If another trip is active instead of UV at this point, the trip is not reset.
3. The drive can change between using the main high voltage supply and low voltage DC supply only when the drive is in the under voltage condition (Pr **10.16** = 1). The UV trip can only be seen as active if another trip is not active in the under voltage condition.
4. When the drive is first powered up a UV trip is initiated if the supply voltage is below the restart voltage level and another trip is not active. This does not cause save power down save parameters to be saved at this point.

12.7 Alarm indications

In any mode an alarm flashes alternately with the data displayed on the 2nd row when one of the following conditions occur. If action is not taken to eliminate any alarm except "Autotune" the drive may eventually trip.

Table 12-7 Alarm indications

Lower display	Description
br.rS	Braking resistor overload
Braking resistor I^2t accumulator (Pr **10.39**) in the drive has reached 75.0 % of the value at which the drive will trip and the braking IGBT is active.	
Hot	Heatsink or control board or inverter IGBT over temperature alarms are active
• The drive heatsink temperature has reached a threshold and the drive will trip O.ht2 if the temperature continues to rise (see the O.ht2 trip). Or • The ambient temperature around the control PCB is approaching the over temperature threshold (see the O.CtL trip).	
OVLd	Motor overload
The motor I^2t accumulator in the drive has reached 75 % of the value at which the drive will be tripped and the load on the drive is >100 %	

12.8 Status indications

Table 12-8 Status indications

Upper display	Description	Drive output stage
ACt	Regeneration mode active The regen unit is enabled and synchronised to the supply.	Enabled
ACUU	AC Supply loss The drive has detected that the AC supply has been lost and is attempting to maintain the DC bus voltage by decelerating the motor.	Enabled
***Auto tunE**	Autotune in progress The autotune procedure has been initialised. *'Auto' and 'tunE' will flash alternatively on the display.	Enabled
dc	DC applied to the motor The drive is applying DC injection braking.	Enabled
dEC	Decelerating The drive is decelerating the motor.	Enabled
inh	Inhibit The drive is inhibited and cannot be run. The drive enable signal is not applied to terminal 31 or Pr **6.15** is set to 0.	Disabled
PLC	Onboard PLC program is running An Onboard PLC program is installed and running. The lower display will flash 'PLC' once every 10s.	Not applicable
POS	Positioning The drive is positioning/orientating the motor shaft.	Enabled
rdY	Ready The drive is ready to be run.	Disabled
run	Running The drive is running.	Enabled
SCAn	Scanning Regen> The drive is enabled and is synchronising to the line.	Enabled
StoP	Stop or holding zero speed The drive is holding zero speed. Regen> The drive is enabled but the AC voltage is too low, or the DC bus voltage is still rising or falling.	Enabled
triP	Trip condition The drive has tripped and is no longer controlling the motor. The trip code appears on the lower display.	Disabled

Table 12-9 Solutions Module and SMARTCARD status indications at power-up

Lower display	Description
boot	A parameter set is being transferred from the SMARTCARD to the drive during power-up.
cArd	The drive is writing a parameter set to the SMARTCARD during power-up. For further information, please refer to section *Auto saving parameter changes (Pr 11.42 = Auto (3))*.
loAding	The drive is writing information to a Solutions Module.

12.9 Displaying the trip history

The drive retains a log of the last 10 trips that have occurred in Pr **10.20** to Pr **10.29** and the corresponding multi-module drive module number (Pr **6.49** = 1) or the trip time (Pr **6.49** = 0) for each trip in Pr **10.41** to Pr **10.51**. The time of the trip is recorded from the powered-up clock (if Pr **6.28** = 0) or from the run time clock (if Pr **6.28** = 1).

Pr **10.20** is the most recent trip, or the current trip if the drive is in a trip condition (with the module number or trip time stored in Pr **10.41** and Pr **10.42**). Pr **10.29** is the oldest trip (with the module number or trip time stored in Pr **10.51**). Each time a new trip occurs, all the parameters move down one, such that the current trip (and time) is stored in Pr **10.20** (and Pr **10.41** to Pr **10.42**) and the oldest trip (and time) is lost out of the bottom of the log.

If any parameter between Pr **10.20** and Pr **10.29** inclusive is read by serial communications, then the trip number in Table 12.6 *Unidrive SP trip codes* on page 202 is the value transmitted.

Index

V

Z

0471-0073-04